# Exhibit B

This page intentionally left blank.

# ATTACHMENT B
# DRAFT RESOLUTION

## Before the Board of Supervisors in and for the County of Monterey, State of California

In the matter of the application of:
**CALIFORNIA DEPARTMENT OF TRANSPORTATION (PLN220090)**

**RESOLUTION NO. ----**

Resolution by the Monterey County Planning Commission to:

1) Consider the environmental effects of the project described in the categorical exclusion pursuant to the National Environmental Protection Act (NEPA) and the Environmental Impact Report (SCH No. 2020049027), Tier 1- Big Sur Bridge Rail Replacement Program and Tier 2 – Garrapata Creek Bridge Rail Replacement Project certified by the California Department of Transportation (CalTrans) pursuant to the California Environmental Quality Act (CEQA);
2) Adopt a Statement of Overriding considerations finding that there are benefits of the project (public safety) that outweigh significant and unavoidable impacts on the environment (impacts to visual resources);
3) Approve a Combined Development Permit consisting of:
    a. A Coastal Development Permit and Design Approval to allow the replacement of the bridge rails on the historic Garrapata Bridge;
    b. A Coastal Development Permit to allow development within the Critical Viewshed;
    c. A Coastal Development Permit to allow development within 750 feet of known archaeological resources, and
    d. A Coastal Development Permit to allow development within 100 feet of environmentally sensitive habitat areas; and
4) Adopt a Mitigation Monitoring and Reporting Plan.

[Garrapata Bridge, Highway One (postmile 63.0), Big Sur Land Use Plan, Coastal Zone

**The California Department of Transportation (CalTrans) application for the Garrapata Bridge Rail replacement project (Permit No. PLN220090) came on for a public hearing before the Monterey County Planning Commission on February 22, 2023. Having considered all the written and documentary evidence, the administrative record, the staff report, oral testimony, and other evidence presented, the Planning Commission finds and decides as follows:**

## FINDINGS

**1. FINDING:** **PROCESS** – The County has processed the subject Combined Development Permit application [HCD-Planning File No. PLN220090/California Department of Transportation] ("Project") in compliance with all applicable procedural requirements.

**EVIDENCE:**

a) On June 1, 2022, pursuant to Monterey County Code ("MCC") Chapter 20.82, California Department of Transportation ("Caltrans" or "Applicant") filed an application for a discretionary permit to allow to allow the replacement of bridge rails on the Garrapata Bridge on Highway One, Big Sur Land Use Plan area, Coastal Zone.

b) On July 1, 2022, 30 days after the filling of the application, the application was deemed complete by operation of law.

c) The Monterey County Planning Commission held a duly-noticed public hearing on the application on February 22, 2023. 10 days in advance of the hearing, notices for public hearing were published in the Monterey County Weekly; posted at and near the project site; and mailed to vicinity property owners and interested parties.

d) The application, project plans, and related support materials submitted by the Applicant to Monterey County HCD-Planning for the proposed development found in Project File No. PLN220090; Clerk of the Board of Supervisors' file(s) related to the appeals.

**2. FINDING:** **CONSISTENCY** – The Project as designed, conditioned and mitigated, is consistent with the applicable plans and policies which designate this area as appropriate for development.

**EVIDENCE:**

a) During the course of review of this application, the Project has been reviewed for consistency with the text, policies, and regulations in:
- 1982 Monterey County General Plan (General Plan);
- Big Sur Land Use Plan (LUP);
- Monterey County Coastal Implementation Plan, Part 3 (CIP);
- Monterey County Coastal Zoning Ordinance (Title 20); and
- Preservation of Historic Resources (Chapter 18.25)

Communications were received during the course of review of the Project indicating inconsistencies with the text, policies, and regulations in these documents. Comments have been considered, response to those comments are provided, and revisions to mitigation measures have been incorporated that address the alleged inconsistencies.

b) Project Location and Zoning. The Project is located on State Route ("Highway" or "Hwy") 1 (postmile 63) in Big Sur. The development includes replacement of bridge rails on the Garrapata Bridge. Approval of this permit will allow safety improvements by replacing a

deteriorating bridge rail that is not compliant with current safety standards without expanding capacity.

c) Land Use. Hwy 1 is a public highway under the jurisdiction of Caltrans. The highway was built in the 1930s and was the first scenic highway in California's Scenic Highway System. The LUP objective for Highway 1 is to maintain and enhance the highway's aesthetic beauty and to protect its primary function as a recreational route. There are two significant policies that carryout this objective; the Critical Viewshed Policies in Section 3.2 of the LUP and the Highway and Roads Policies in Section 4 of the LUP. The text, policies, and regulations in the LUP clearly recognize Hwy 1as an existing and important facility in Monterey County. They also recognize the need for upgrades and improvements. The Project is consistent with LUP Policies as detailed in the evidence contained herein.

d) Project Justification. The railings on Garrapata Bridge are in a significantly deteriorated state. Due to the state of deterioration and age of the construction, CalTrans has found that the rail is unsafe at any speed and must be replaced with a rail meeting current safety standards. The Manual for Assessing Safety Hardware, also known as "MASH" is a set of design and testing parameters for bridge rails and other highway safety devices. One of the requirements of the MASH is the that the rail designs be physically crash tested by running vehicles of different sizes into the rail based on existing traffic speeds. Caltrans conducted a speed survey in 2019 which determined the 85$^{th}$ percentile operating speed of drivers at Garrapata Greek Bridge was 58 miles an hour. The California Manual for Setting Speed Limits indicates that this 85$^{th}$ percentile operating speed is the speed that should be used to establish the speed limit. Reducing the speed limit is not justified in this case. At this speed the MASHJ "|TR-4" standards apply. CalTrans is proposing a custom designed bridge rail ("86-H") that is capable of meeting the applicable MASH standards while also minimizing impacts on views and on the historic character of the bridge.

e) Critical Viewshed. Within Big Sur, development that is visible from Highway 1 is prohibited. Policy 3.2.5.C.1 of the Big Sur Land Use Plan provides an exception to the Critical Viewshed Policies for Highway One. This Policy states in relevant part: "*Road capacity, safety and aesthetic improvements shall be allowed, as set forth below, provided they are consistent with Section 4.1.1, 4.1.2, and 4.1.3 of this plan. Signs, guardrails, and restrooms shall be of a design complementary to the rural setting and character of Big Sur, with preference for natural materials. Protective barriers constructed by Caltrans should utilize boulders or walls of rock construction*."

Policies 4.1.1, 4.1.2, and 4.1.3 are policies specific to Highway one in the Big Sur area. These policies establish a principal objective to maintain the highest possible standard of visual beauty and interest in the management, maintenance, and construction activities within the Highway 1 right-of-way.

This particular project is a safety improvement and does not affect road capacity. The proposed guardrail will be bulkier than the existing guardrail making views through the rail less accessible. This is due to the smaller sizes of openings in the guard rail and the introduction of more posts and shorter spans of the open railing style. The height of the rail will remain the same. Efforts have been made by CalTrans to bevel the smaller openings giving them the appearance of larger openings and the final design retains the same general style of rail (concrete rail with arched openings between posts).

The proposed design is sensitive to the historic character and attempts to preserve views while still meeting current traffic safety standards consistent with the LUP.

f) Environmentally Sensitive Habitat Areas (ESHA). The proposed Project is located within 100 feet of ESHA and therefore requires granting of a Coastal Development Permit. ESHA, containing sensitive plant and animal species is present on the Coastal bluffs and within the riparian corridor below the bridge. This project will remove approximately 6,000 square feet of vegetation near the bridge for construction staging. Other than this, staging and construction will occur within the existing right-of-way. Prior to the completion of construction, CalTrans proposes to re-vegetate the disturbed vegetation area with plants native to the Coastal Scrub habitat. Preconstruction surveys are prosed to ensure that woodrats and nesting birds are not disturbed prior to removing vegetation.

g) Historic Resources. The bridge is eligible for listing in the National Register of Historic Placed (NRHP) and the California Register of Historic Places (CRHR), both under Criteria A/1, "*Associated with events that have made a significant contribution to the broad patterns of local or regional history or the cultural heritage of California or the United States"* for its association with the Highway Beautification Movement and construction of the Carmel-San Simeon Highway, and under Criteria C/3, "*Embodies the distinctive characteristics of a type, period, region or method of construction or represents the work of a master or possesses high artistic values"* as an example of reinforced concrete bridge design and engineering from the 1920s-30s.

Despite impacts to individual elements of integrity and one of its character defining features, after the project the bridge would still retain its overall integrity, remaining individually eligible for listing on the NRHP and CRHR.

In order to minimize adverse effects associated with the bridge, the architectural historian recommended developing a railing type that is visually compatible with the original bridge railing as possible. The result of this design effort has been the 86-H, which attempts to preserve as many of the features of the original railing as possible while still complying with the dimensional requirements of the MASH "TR-4" standard (See further discussion of this standard in the "Justification" section below). The design has been iterated several times to advance

this goal and: it retains an arched opening type, which has been chamfered to maximize visibility while maintaining the maximum 6" width requirement of the standard; uses a rounded top pilaster consistent with the original rail with a similar vertical seam; locates major pilasters above the support structure, maintaining the same symmetry and visual relationships of the bridge; and maintains the same low 42" height of the original rails.

This is consistent with the development standard in CIP section 20.145.110.C.1., that development be modified to be compatible with a historical site through appropriate design, structural and architectural features, and other techniques recommended by the historian. The color in the conceptual renderings has been similarly iterated, with the original color being a darker grey, and more recent renderings using a warmer "sandier" beige tone. In accordance with this standard and CIP section 20.145.110.C.2., staff are recommending a condition of approval requiring a final color selection mockup be done, which shall match the existing rail color as closely as possible.

h) Historic Resources Review Board. On January 25, 2023, the Historic Resources Review Board (HRRB) considered the proposed project. After receiving additional information on the design and justification, the HRRB 6-0 with 1 absent to recommend approval of the project with 2 conditions. The first condition is that the final color be reviewed and approved, and the second condition was that speed studies and other alternatives be explored for each bridge. These conditions have been incorporated.

i) Other Resources. Caltrans has prepared an EIR for the Garrapata Bridge Rail Replacement Project that addresses all potential impacts to environmental resources including aesthetics, air quality, biology, cultural resources, energy, soils and geology, greenhouse gases, hazards, hydrology, land use, noise, housing, public services, transportation, tribal cultural, utilities, and cumulative impacts. Alternatives were considered, changes to the Project have been made, and mitigations have been applied to avoid or reduce impacts to the extent feasible.

j) Land Use Advisory Committee (LUAC) Review. On November 8, 2022, the Big Sur Land Use Advisory Committee (LUAC) considered the proposed project. The LUAC recommend approval with changes by a vote of 4 ayes to 1 no (**Exhibit I**). Comments were made that the reduced opening sizes in the proposed replacement rails obscure the viewshed and the openings should be widened to their original height and width and that the historic design be maintained while attempting to meet current safety standards.

k) The application, Project plans, and related support materials submitted by the Project applicant to Monterey County HCD-Planning for the proposed development found in Project File PLN220090.

**3. FINDING:** **SITE SUITABILITY –** The site is physically suitable for the proposed development and/or use.

**EVIDENCE:** a) The Project has been reviewed for site suitability by the following departments and agencies: HCD-Planning, HCD-Engineering Services,

HCD-Environmental Services, and HCD-Engineering Services. County staff reviewed the application materials and plans to verify that the Project on the subject site conforms to the applicable plans and regulations, and there has been no indication from these departments/agencies that the site is not suitable for the development.

b) The Project is suitable for the site as it provides safety improvements within the existing Highway right-of-way. These improvements have been limited to either existing road right or disturbed areas as much as feasible.

c) The application, Project plans, and related support materials submitted by the Project applicant to Monterey County HCD-Planning found in Project File PLN220090.

**4. FINDING:** **HEALTH AND SAFETY –** The establishment, maintenance, or operation of the Project applied for will not under the circumstances of this particular case be detrimental to the health, safety, peace, morals, comfort, and general welfare of persons residing or working in the neighborhood of such proposed use, or be detrimental or injurious to property and improvements in the neighborhood or to the general welfare of the County.

**EVIDENCE:** a) The Project was reviewed by HCD-Planning, HCD-Engineering Services, and HCD-Environmental Services. The respective agencies have recommended conditions, where appropriate, to ensure that the Project will not have an adverse effect on the health, safety, and welfare of persons either residing or working in the neighborhood.

b) The purpose of the of the proposed Project is to improve the safety by replacing a deteriorating bridge rail to protect travelers on Highway 1.

c) The proposed Project will include replacement of bridge rails on both sides of the bridge. The project is anticipated to take 1 year to complete during which time one-way signalized traffic control will be provided. .

d) The application, Project plans, and related support materials submitted by the Project applicant to Monterey County HCD-Planning found in Project File PLN220090.

**5. FINDING:** **CEQA and NEPA (Previously Adopted EIR/CE) -** The Planning Commission, as a responsible agency under the California Environmental Quality Act (CEQA), has considered the Environmental Impact Report (EIR) (SCH#2020049027) for the Project, together with Categorical Exclusion determination pursuant to the National Environmental Protection Act (NEPA) adopted by the California Department of Transportation (Caltrans) as the lead agency for the Project under CEQA and NEPA.

**EVIDENCE:** a) A Final EIR/ Categorical Exclusion (CE) for the Project (SCH#2020049027) was prepared by Caltrans as lead agency under the California Environmental Quality Act (CEQA) and the National Environmental Policy Act (NEPA). Caltrans certified the EIR on. The EIR/CE assessed the current environmental conditions and evaluated the environmental effects associated with the construction and operation of the Garrapat Bridge Rail Replacement Project (Tier 2 analysis). Monterey County is acting on a Combined Development Permit

(Coastal development entitlements) for the Project as a responsible agency under CEQA.

b) The lead agencies EIR/CE identified potential impacts to Aesthetics, Air Quality, Biological Resources, Geology and Soils, Hazards & Hazardous Materials, Hydrology and Water Quality, Land Use Planning, Noise, Utilities and Service Systems, and Cumulative effects.

c) The County is a responsible agency under CEQA due to the County's permitting authority for projects that are within the unincorporated area of the County. As a responsible agency, the County's role is more limited than a lead agency. The County has responsibility for mitigating or avoiding only the direct and indirect environmental effects of those parts of the project which it decides to "... approve." (California Code of Regulations, Title 14 (CEQA Guidelines) sec. 15097(g).) The County has considered the environmental effects of the Garrapata Bridge Rail Replacement Project as analyzed in the EIR/CE. All feasible mitigation measures within the County's powers have been incorporated in the County's approval.

d) The EIR/CE, includes mitigation measures that will reduce all impacts to a less than significant level, with the exception of impacts to Visual Resources (See Finding 9 below.)

**6. FINDING:** **CEQA (NO SUPPLEMENTAL OR SUBSEQUENT EIR IS NEEDED).** The Planning Commission finds that no Supplemental or Subsequent EIR is required pursuant to Public Resources Code section 21166 and CEQA Guidelines sections 15162 or 15163.

**EVIDENCE:**

a) Pursuant to Public Resources Code section 21166, once an EIR has been certified for a project, no subsequent or supplemental environmental impact report shall be required by the lead agency or by the responsible agency unless major revisions of the EIR are required due to substantial changes in the project, substantial changes in circumstances, or substantial new information, which was not known and could not have been known at the time the environmental impact report was certified as complete, becomes available.

b) There have not been any substantial changes to the Project which require major revisions to the previous EIR due to the involvement of new significant environmental effects or a substantial increase in the severity of previously identified effects. The EIR evaluated replacement of bridge rails on 7 historic concrete bridges on Highway 1 in Big Sur (Tier 1 programmatic review) and the specific impacts of the bridge rail replacement project on Garrapata Bridge (Tier 2 project specific review). There have been no changes to the project since certification of the EIR.

c) No substantial changes have occurred with respect to the circumstances under which the Project is undertaken which will require major revisions of the previous EIR due to the involvement of new significant environmental effects or a substantial increase in the severity of previously identified significant effect. The site and its surroundings have remained unchanged since certification of the EIR in 2021. There has also been little to no change in land use patterns or circulation patterns in the region.

c) No new information of substantial importance has been presented, which was not known and could not have been known with the exercise of

reasonable diligence at the time the EIR was certified. (CEQA Guidelines section 15162.) A Final EIR/CE was adopted by Caltrans on May 7, 2021. These are relatively recent approvals and substantially important information was known at the time of the review and approval. Monterey County has clarified project justification and alternatives with CalTrans that amplify but do not change the analysis and conclusions contained in the certified EIR.

**7. FINDING:** **CEQA EFFECTS WITH NO IMPACT OR LESS THAN SIGNIFICANT IMPACT** – The Final EIR/CE found that Garrapata Bridge Rail Replacement Project will have no impact or less than significant impacts on the certain environmental resources.

**EVIDENCE:** a) As fully detailed in the FEIR/CE, the Project would have no impact or a less than significant impact on: Air Quality, Agriculture and Forest Resources, Climate Change, Land Use, Energy, Mineral Resources, Noise, Parks and Recreation, Paleontology, Hazards and Hazardous Materials, Hydrology and Water Quality, Solis and Geology, Utilities, Transportation, and Wildfire.

b) Monterey County has reviewed the EIR/CE and agrees with these conclusions. For significant impacts or impacts that require mitigation, see findings 8 and 9 below.

**8. FINDING:** **EIR-ENVIRONMENTAL IMPACTS MITIGATED TO LESS THAN SIGNIFICANT -** The Final EIR/CE found that Garrapata Bridge Rail Replacement Project may have potentially significant impacts to Resources, Biological Resources, and Cultural Resources. Changes or alterations have been incorporated into the Project which avoid or substantially lessen the potentially significant environmental effects of the construction and operation of the Project. For each potential impact summarized below, the mitigation measures have been identified and adopted that reduce that potential impact to less than significant.

**EVIDENCE:** a) Cultural Resources. The area where the project will occur contains known archaeological resources and the Garrapata Bridge has been determined to be eligible for listing as an historic resources. For these reasons, there is the potential for the project to impact archaeological and historic resources (together "cultural resources"). For archaeological resources, known resources have been identified and impacts to resources will be avoided. The potential for discovery of unidentified resources will be mitigated through a standard condition that requires work to stop if resources are discovered during construction.

For historic resources, Mitigation and minimization measures include the development of a context sensitive bridge railing design that is as compatible with the original railing in terms of design and materials as can be allowed under Manual for Assessing Safety Hardware standards, a public interpretive document (pamphlet or booklet) on the history of transportation and historical context of the bridges that will be distributed in the local area, and Historic American Engineering Record professional photographic and written documentation of the bridge to be

prepared before the bridge railing is demolished. Mitigation measures have been reviewed by the State Historic Preservation Office.

b) Biological Resources. The project is expected to have no effect on listed plant species and their designated critical habitat. The biological study area includes two plant communities: coastal scrub and ruderal/disturbed. Native and non-native species occur within both of these communities, to varying degrees. No trees are proposed for removal for the project, but vegetation clearing and/or trimming may be required for construction. About 6,000 square feet of Coastal Scrub vegetation will be removed near the bridge for construction and staging. To minimize impacts from vegetation removal Caltrans mitigation measures would require:

- Five days prior to the beginning of work, the Resident Engineer will meet with the Project Biologist in the field at the project site for the identification of select locations where Environmentally Sensitive Area fence and flagging will be incorporated.
- All equipment staging and material storage, stockpile, disposal, and borrow sites must be inspected for potentially sensitive biological resources prior to use or equipment mobilization. If sites are selected other than those already designated on the approved project plans, the Resident Engineer will contact the Environmental Construction Liaison or Project Biologist no less than two weeks prior to use of equipment staging and material storage, stockpile, disposal, and borrow sites. If sensitive biological resources are found at such sites, then new locations will be selected.
- Following construction, areas of temporary disturbance to natural habitats would be stabilized and revegetated; these include areas supporting coastal scrub. Permanent erosion control, planting, or a combination of both would be used to vegetate all temporarily impacted areas. The Caltrans Landscape Architecture Division would prepare erosion control and planting plans in coordination with the project biologist. Permanent erosion control seed would consist of a mix of species native to the area. Areas of temporarily disturbed coastal scrub would be replaced in-kind.

To ensure impacts to sensitive animal species are avoided, CalTrans biologists will conduct preconstruction surveys for woodrats and nesting birds.

e) Cumulative Effects. This permit covers only the Garrapata Bridge Rail Replacement Project. The other 6 historic bridges in Big Sur considered in the Tier 1 Environmental Analysis will require project specific review and consideration of conditions unique to each bridge. Cumulative impacts to the historic resources are not anticipated to be significant because of the discontinuous and nonuniform nature of the 7 historic bridges.

**9. FINDING: EIR-ENVIRONMENTAL IMPACTS NOT MITIGATED TO LESS THAN SIGNIFICANT** –The Project would result in

significant and unavoidable impacts that would not be mitigated to a less than significant level even with incorporation of mitigation measures. In accordance with Section 15093 of the CEQA Guidelines, the County has evaluated the economic, legal, social, technological, or other benefits of the Project against its unavoidable significant environmental impacts in determining whether to approve the Project, and has determined that the benefits of the Project outweigh its unavoidable adverse environmental effects so that the adverse environmental effects may be considered "acceptable."

**EVIDENCE:** a) Unavoidable Impacts to Visual Resources. The FEIR/CE found that both the Big Sur Bridge Rail Replacement Program (Tier 1) and the Garrapata Bridge Rail Replacement Project (Tier 2) would result in a loss of scenic vistas, substantial reduction of visual quality and character, and loss of visual access to coastal scenic resources. This impact was considered significant and unavoidable..

b) The Project will result in development that will provide benefits described herein to the surrounding community, Monterey County and the region has a whole.

c) Health and Safety. Highway 1 in Big Sur is the only transporation corridor for residence of the Big Sur Coast and is used by tens of thousands of visitors for recreation. The bridge rails on Garrapata Bridge have been found to be unsafe for travelers should an incident involving the bridge rails occur. This project will provide for a new bridge rail meeting current crash test rating safety standards, which are intended to protect health, life and safety of persons traveling on the bridge.

d) Mitigations. Although the visual impacts have been found to be a significant and unavoidable feasible mitigation measures must be applied to reduce the severity of the impacts to the extent possible. CalTrans proposes the following mitigation measures to minimize impacts on visual resources to the extent feasible:

1. Involve the community in the design of all aesthetic project features.
2. Use an open-style bridge rail that minimizes view blockage.
3. Use the smallest bridge rail terminal end blocks possible that meet safety needs.
4. Use finish colors and textures that minimize reflectivity and glare.
5. Re-contour all disturbed areas and construction access roads to a natural appearance.
6. Vegetate all stabilized soil areas with native shrubs and grasses as appropriate.
7. Bury all over-side drains and inlet structures or hide them from view to the greatest extent possible. Where unavoidably exposed to view, color the pipes to reduce noticeability, and dull the gloss of the finish.
8. Where metal beam guardrail or metal end treatments are required, use measures to reduce reflectivity of the metal components.

CalTrans has attempted to incorporate these measures in the proposed design or through conditions and mitigations for the project.

**10. FINDING: EIR-CEQA ALTERNATIVES**

The EIR evaluated a reasonable range of alternatives to the proposed project in compliance with CEQA Guidelines section 15126.6. The EIR considered the project and no project building alternatives described below and as more fully described in the EIR. The EIR identified that the Project was the environmentally superior alternative. Three other alternatives were considered but eliminated from further discussion (2 foot widening alternative, reduced speed alternative, and new bridge alignment alternative).

**EVIDENCE:**

a) No-Build Project Alternative. The no-build project alternative involves not replacing the bridge rail on Garrapata Bridge. The existing bridge rails would remain. The no-build project alternative does not meet the Project goals and objectives and would continue the current unsafe conditions due to the age and deterioration of the bridge rails.

b) Alternatives Dismissed. The EIR considered but dismissed alternatives for road widening, reduced speed limits, and highway realignment. These alternatives were found infeasible (reduced speeds) or would introduce substantially more significant effects than the proposed project.

c) Environmentally Superior Alternative. The EIR found that proposed project (the "Build Alternative") will replace the existing nonstandard bridge rail and approach railing with a new railing that meets current traffic safety standards. The Build Alternative will evaluate the two considered rail types and design variations to implement context sensitive design solutions. The preferred Build Alternative will appropriately address the purpose and need of the purpose of the project.

**11. FINDING:** **PUBLIC ACCESS** – The Project is in conformance with the public access and recreation policies of the Coastal Act (specifically Chapter 3 of the Coastal Act of 1976, commencing with Section 30200 of the Public Resources Code) and applicable Local Coastal Program, and does not interfere with any form of historic public use or trust rights.

**EVIDENCE:**

a) No public access is required as part of the Project as no substantial adverse impact on access, either individually or cumulatively, as described in LUP or CIP.

b) No evidence or documentation has been submitted or found showing the existence of historic public use or trust rights over this property other than the recognition that Highway 1 itself is a recreational access that must be preserved.

c) Visual access will be impacted. Visual impacts on Highway 1 in Big Sur are strictly controlled in the LUP. The LUP permits improvements to the Highway for safety reasons. Measures have been incorporated to minimize visual impacts of the project while meeting current safety standards.

d) The application, Project plans, and related support materials submitted by the Project applicant to Monterey County HCD-Planning for the proposed development found in Project File No. PLN220090.

**12. FINDING:** **NO VIOLATIONS –** The subject property is in compliance with all rules and regulations pertaining to zoning uses, subdivision, and any

other applicable provisions of the County's zoning ordinance. No violations exist on the property.

**EVIDENCE:** a) Staff reviewed Monterey County HCD-Planning and HCD-Building Services records and is not aware of any violations existing on subject property.

b) The application, Project plans, and related support materials submitted by the Project applicant to Monterey County HCD-Planning found in Project File PLN220090.

**13. FINDING:** **APPEALABILITY -** The decision on this Project may be appealed to the Board of Supervisors and the California Coastal Commission.

**EVIDENCE:** a) Pursuant to Title 20 Section 20.86.080, the Project is subject to appeal by/to the Coastal Commission because it involves development that is a conditional use.

b) Section 20.80.040.D of the Monterey County Zoning Ordinance states that the proposed project is appealable to the Board of Supervisors.

## DECISION

**NOW, THEREFORE**, based on the above findings and evidence, and the administrative record as a whole, the Planning Commission does hereby:

A. Certify that the environmental effects of the project described in the categorical exclusion pursuant to the National Environmental Protection Act (NEPA) and the Environmental Impact Report (SCH No. 2020049027), Tier 1- Big Sur Bridge Rail Replacement Program and Tier 2 – Garrapata Creek Bridge Rail Replacement Project certified by the California Department of Transportation (CalTrans) pursuant to the California Environmental Quality Act (CEQA)have been considered;

B. Adopt a Statement of Overriding considerations finding that there are benefits of the project (public safety) that outweigh significant and unavoidable impacts on the environment (impacts to visual resources);

C. Approve a Combined Development Permit consisting of:

1. A Coastal Development Permit and Design Approval to allow the replacement of the bridge rails on the historic Garrapata Bridge;
2. A Coastal Development Permit to allow development within the Critical Viewshed;
3. A Coastal Development Permit to allow development within 750 feet of known archaeological resources, and
4. A Coastal Development Permit to allow development within 100 feet of environmentally sensitive habitat areas; and

D. Adopt a Mitigation Monitoring and Reporting Plan.

All of which subject to the attached conditions attached hereto and incorporated herein by reference.

**PASSED AND ADOPTED** this 22nd day of February, 2023 upon motion of _____ _____, seconded by _____, by the following vote:

AYES:

NOES:
ABSENT:
ABSTAIN:

_____
Craig Spencer, Secretary

COPY OF THIS DECISION MAILED TO APPLICANT ON _____

THIS APPLICATION IS APPEALABLE TO THE BOARD OF SUPERVISORS.

IF ANYONE WISHES TO APPEAL THIS DECISION, AN APPEAL FORM MUST BE COMPLETED AND SUBMITTED TO THE CLERK TO THE BOARD ALONG WITH THE APPROPRIATE FILING FEE ON OR BEFORE _____

This decision, if this is the final administrative decision, is subject to judicial review pursuant to California Code of Civil Procedure Sections 1094.5 and 1094.6. Any Petition for Writ of Mandate must be filed with the Court no later than the 90th day following the date on which this decision becomes final.

NOTES

This permit expires 2 year after the above date of granting thereof unless construction or use is started within this period.

# County of Monterey HCD Planning

## DRAFT Conditions of Approval/Implementation Plan/Mitigation Monitoring and Reporting Plan

PLN220090

### 1. PD001 - SPECIFIC USES ONLY

**Responsible Department:** RMA-Planning

**Condition/Mitigation Monitoring Measure:** This permit (PLN220090) allows:

1. A Coastal Development Permit and Design Approval to allow the replacement of the bridge rails on the historic Garrapata Bridge;
2. A Coastal Development Permit to allow development within the Critical Viewshed;
3. A Coastal Development Permit to allow development within 750 feet of known archaeological resources; and
4. A Coastal Development Permit to allow development within 100 feet of environmentally sensitive habitat.

The property is located at Garrapata Creek Bridge near post mile 63.0 on HWY 1, Big Sur Coast Land Use Plan. This permit was approved in accordance with County ordinances and land use regulations subject to the terms and conditions described in the project file. Neither the uses nor the construction allowed by this permit shall commence unless and until all of the conditions of this permit are met to the satisfaction of the Director of HCD - Planning. Any use or construction not in substantial conformance with the terms and conditions of this permit is a violation of County regulations and may result in modification or revocation of this permit and subsequent legal action. No use or construction other than that specified by this permit is allowed unless additional permits are approved by the appropriate authorities. To the extent that the County has delegated any condition compliance or mitigation monitoring to the Monterey County Water Resources Agency, the Water Resources Agency shall provide all information requested by the County and the County shall bear ultimate responsibility to ensure that conditions and mitigation measures are properly fulfilled. (HCD - Planning)

**Compliance or Monitoring Action to be Performed:** The Owner/Applicant shall adhere to conditions and uses specified in the permit on an ongoing basis unless otherwise stated.

### 3. PD006 - CONDITION OF APPROVAL / MITIGATION MONITORING PLAN

**Responsible Department:** RMA-Planning

**Condition/Mitigation Monitoring Measure:** The applicant shall enter into an agreement with the County to implement a Condition of Approval/Mitigation Monitoring and/or Reporting Plan (Agreement) in accordance with Section 21081.6 of the California Public Resources Code and Section 15097 of Title 14, Chapter 3 of the California Code of Regulations. Compliance with the fee schedule adopted by the Board of Supervisors for mitigation monitoring shall be required and payment made to the County of Monterey at the time the property owner submits the signed Agreement. The agreement shall be recorded. (HCD- Planning)

**Compliance or Monitoring Action to be Performed:** Within sixty (60) days after project approval or prior to the issuance of building and grading permits, whichever occurs first, the Owner/Applicant shall:

1) Enter into an agreement with the County to implement a Condition of Approval/Mitigation Monitoring Plan.

2) Fees shall be submitted at the time the property owner submits the signed Agreement.

3) Proof of recordation of the Agreement shall be submitted to HCD-Planning.

### 4. PDSP001 - COLOR AND MATEIAL MOCKUP

**Responsible Department:** RMA-Planning

**Condition/Mitigation Monitoring Measure:** The color and finish of the new rails shall match the existing rails as much as possible. Prior to commencement of construction, the owner/applicant shall submit a color and material mockup of the final color selections, intended to match both the hue and texture of the existing rail to HCD-Planning for review and approval.

**Compliance or Monitoring Action to be Performed:** Prior to commencement of construction, the owner/applicant shall submit a color and material mockup of the final color selections, intended to match both the hue and texture of the existing rail to HCD-Planning for review and approval.

### 5. PDSP002 - SPEED SURVEY SUBMITTAL REQUIREMENT

**Responsible Department:** RMA-Planning

**Condition/Mitigation Monitoring Measure:** A full traffic assessment, including a speed study and evaluation of the potential of ways of minimizing speed, shall be prepared for each of the other five historical Big Sur bridges which are discussed as being considered for rail replacement in the “Tier 1” EIR as a submittal requirement for the Coastal Development Permits for any of those projects.

**Compliance or Monitoring Action to be Performed:** The Owner/Applicant shall submit the traffic assessment and speed study concurrent with the submittal of the Coastal Development Permits for alteration to any of the other historic bridges in the Tier 1 EIR.

## 6. PDSP003 - IMPLEMENTATION OF MITIGATION MEASURES

**Responsible Department:** RMA-Planning

**Condition/Mitigation Monitoring Measure:** CalTrans shall implement all avoidance, minimization, and mitigation measures identified as applying to the Garrapta Creek Bridge Rail Replacement Project within the Tier 1 and 2 EIR certified on May 5, 2021 (SCH #2020049027).

**Compliance or Monitoring Action to be Performed:** CalTrans shall provide evidence to HCD-Planning that the mitigation measures adopted for the Project have been implemented.

On an ongoing basis in accordance with the timing identified in the EIR prepared for theGarrapta Creek Bridge Rail Replacement Project, CalTrans shall send verification that avoidance, minimization, and mitigation measures identified as applying to the Garrapta Creek Bridge Rail Replacement Project are being implemented.

## 7. PDSP004 - RE-VEGETATION PLAN

**Responsible Department:** RMA-Planning

**Condition/Mitigation Monitoring Measure:** Any vegetation removed shall for access/staging shall be re-seeded with ground cover native to coastal scrub habitat area.

**Compliance or Monitoring Action to be Performed:** Prior to commencement of vegetation removal, the owner/applicant shall submit an restoration/erosion control plan prepared by a qualified biologist detailing how the areas will be re-seeded with ground cover compatible with the coastal scrub habitat area.

Prior to completion of construction, the owner/applicant shall re-seed any areas of vegetation removal.

## 8. CC01 INDEMNIFICATION AGREEMENT

**Responsible Department:** County Counsel-Risk Management

**Condition/Mitigation Monitoring Measure:** The property owner agrees as a condition and in consideration of approval of this discretionary development permit that it will, pursuant to agreement and/or statutory provisions as applicable, including but not limited to Government Code Section 66474.9, defend, indemnify and hold harmless the County of Monterey or its agents, officers and employees from any claim, action or proceeding against the County or its agents, officers or employees to attack, set aside, void or annul this approval, which action is brought within the time period provided for under law, including but not limited to, Government Code Section 66499.37, as applicable. The property owner will reimburse the County for any court costs and attorney's fees which the County may be required by a court to pay as a result of such action. The County may, at its sole discretion, participate in the defense of such action; but such participation shall not relieve applicant of his/her/its obligations under this condition. An agreement to this effect shall be recorded upon demand of County Counsel or concurrent with the issuance of building permits, use of property, filing of the final map, recordation of the certificates of compliance whichever occurs first and as applicable. The County shall promptly notify the property owner of any such claim, action or proceeding and the County shall cooperate fully in the defense thereof. If the County fails to promptly notify the property owner of any such claim, action or proceeding or fails to cooperate fully in the defense thereof, the property owner shall not thereafter be responsible to defend, indemnify or hold the County harmless. (County Counsel-Risk Management)

**Compliance or Monitoring Action to be Performed:** Upon demand of County Counsel or concurrent with the issuance of building permits, use of the property, recording of the final/parcel map, or recordation of Certificates of Compliance, whichever occurs first and as applicable, the Owner/Applicant shall submit a signed and notarized Indemnification Agreement to the Office of County Counsel-Risk Management for review and signature by the County.

Proof of recordation of the Indemnification Agreement, as outlined, shall be submitted to the Office of County Counsel-Risk Management

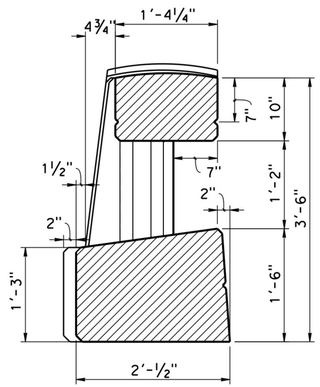


TYPE 86H SECTION

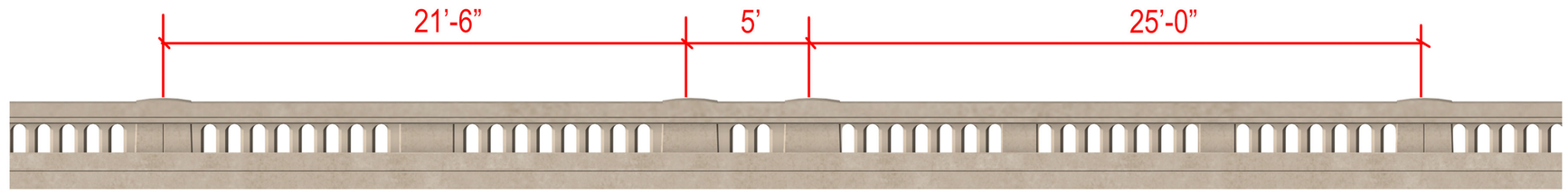


86H WITH TOP BEAM GROOVE LINE FRONT ELEVATION

EXISTING FRONT ELEVATION

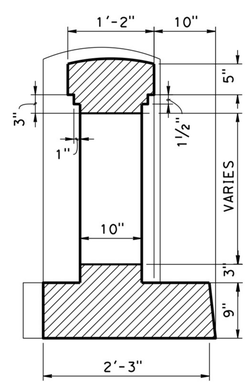


EXISTING SECTION

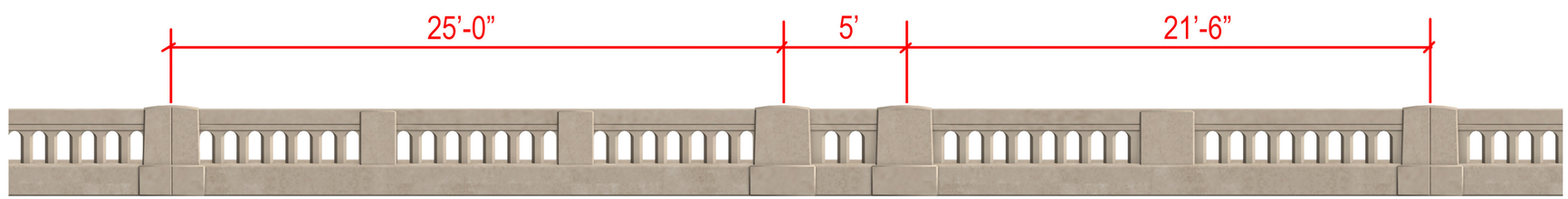


86H WITH TOP BEAM GROOVE LINE BACK ELEVATION

EXISTING BACK ELEVATION

# GARRAPATA CREEK BRIDGE BARRIER STUDY

02/18/22

Prepared by: DES, Bridge Architecture and Aesthetics

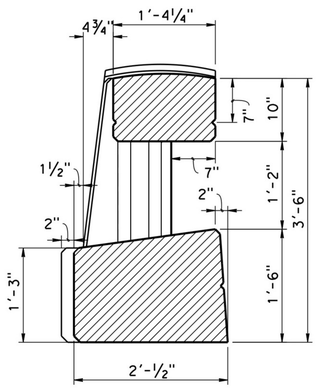


TYPE 86H SECTION

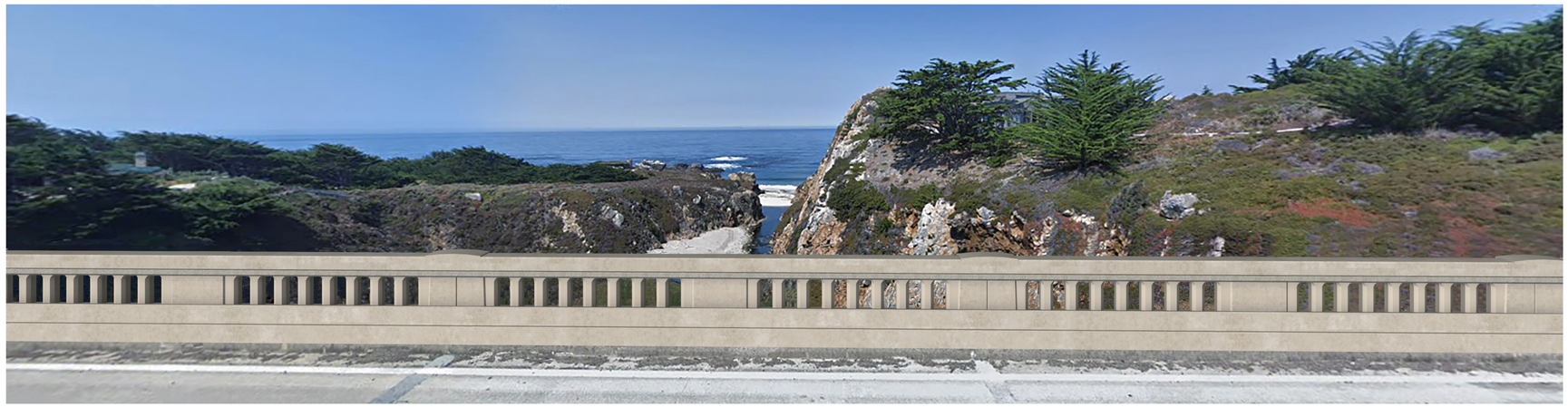

TYPE 86H ON DECK VIEW

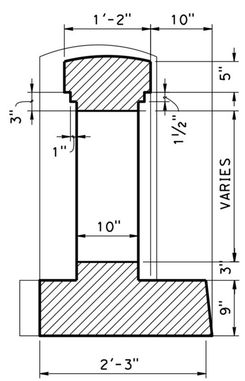


EXISTING SECTION

EXISTING ON DECK VIEW

# GARRAPATA CREEK BRIDGE BARRIER STUDY

01/05/22

Prepared by: DES, Bridge Architecture and Aesthetics

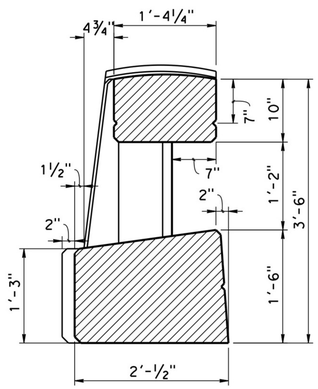


TYPE 86H SECTION

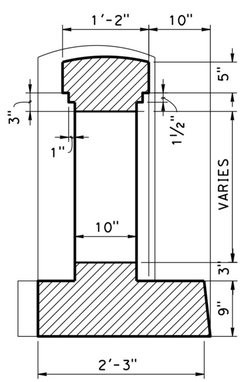


EXISTING SECTION

# GARRAPATA CREEK BRIDGE BARRIER STUDY

02/22/22

Prepared by: DES, Bridge Architecture and Aesthetics

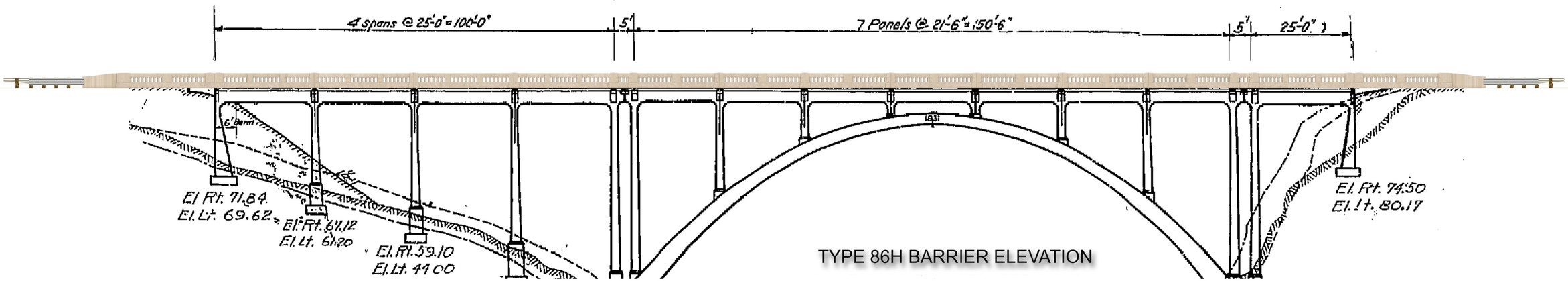


TYPE 86H BARRIER ELEVATION

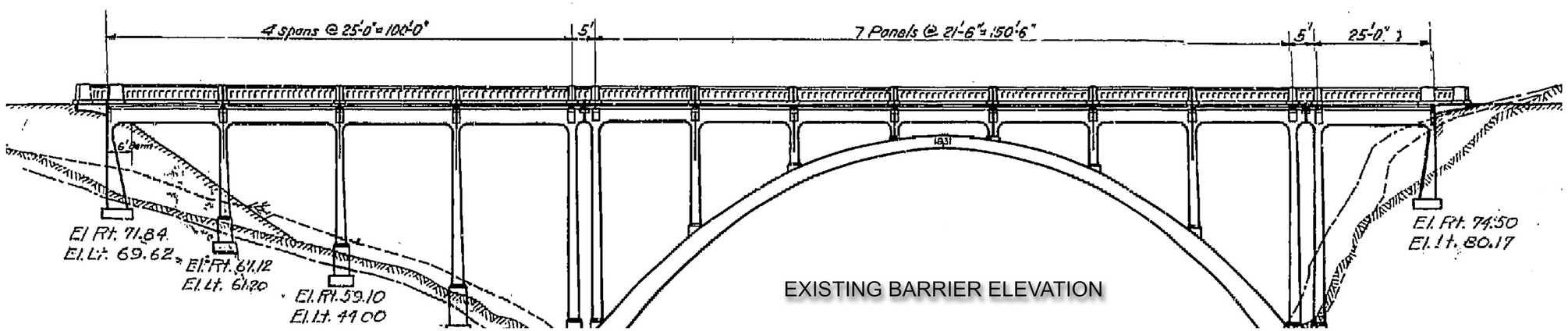


EXISTING BARRIER ELEVATION

# GARRAPATA CREEK BRIDGE BARRIER STUDY

01/05/22

Prepared by: DES, Bridge Architecture and Aesthetics

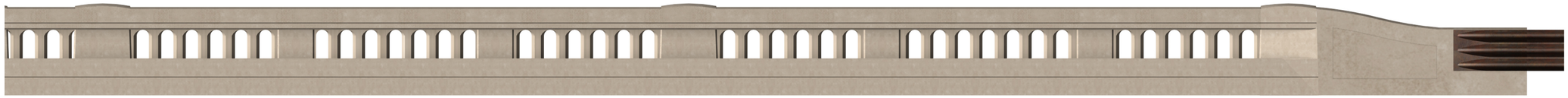

86H END BLOCK FRONT ELEVATION

86H END BLOCK BACK ELEVATION

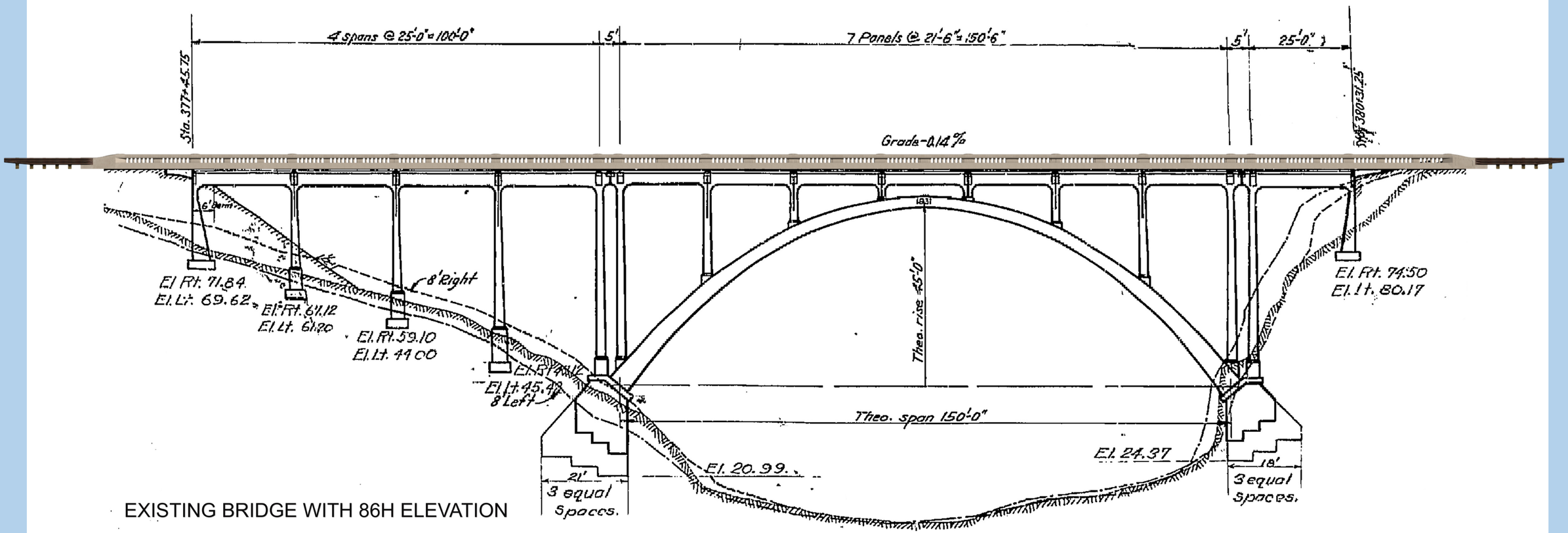


EXISTING BRIDGE WITH 86H ELEVATION

# GARRAPATA CREEK BRIDGE BARRIER TYPE 86H

09/06/22

Prepared by: DES, Bridge Architecture and Aesthetics

86H FRONT ELEVATION PHOTO SIM.

# GARRAPATA CREEK BRIDGE BARRIER TYPE 86H

09/06/22

Prepared by: DES, Bridge Architecture and Aesthetics

86H NORTH END BLOCK PHOTO SIM.

# GARRAPATA CREEK BRIDGE BARRIER TYPE 86H

09/06/22

Prepared by: DES, Bridge Architecture and Aesthetics

86H SOUTH END BLOCK PHOTO SIM.

# GARRAPATA CREEK BRIDGE BARRIER TYPE 86H

09/06/22

Prepared by: DES, Bridge Architecture and Aesthetics

| Dist | COUNTY | ROUTE | POST MILES TOTAL PROJECT | SHEET No. | TOTAL SHEETS |
|---|---|---|---|---|---|
| | | | | | |

REGISTERED CIVIL ENGINEER X DATE

PLANS APPROVAL DATE

REGISTERED PROFESSIONAL ENGINEER X No. X Exp. X CIVIL STATE OF CALIFORNIA

*THE STATE OF CALIFORNIA OR ITS OFFICERS OR AGENTS SHALL NOT BE RESPONSIBLE FOR THE ACCURACY OR COMPLETENESS OF SCANNED COPIES OF THIS PLAN SHEET.*

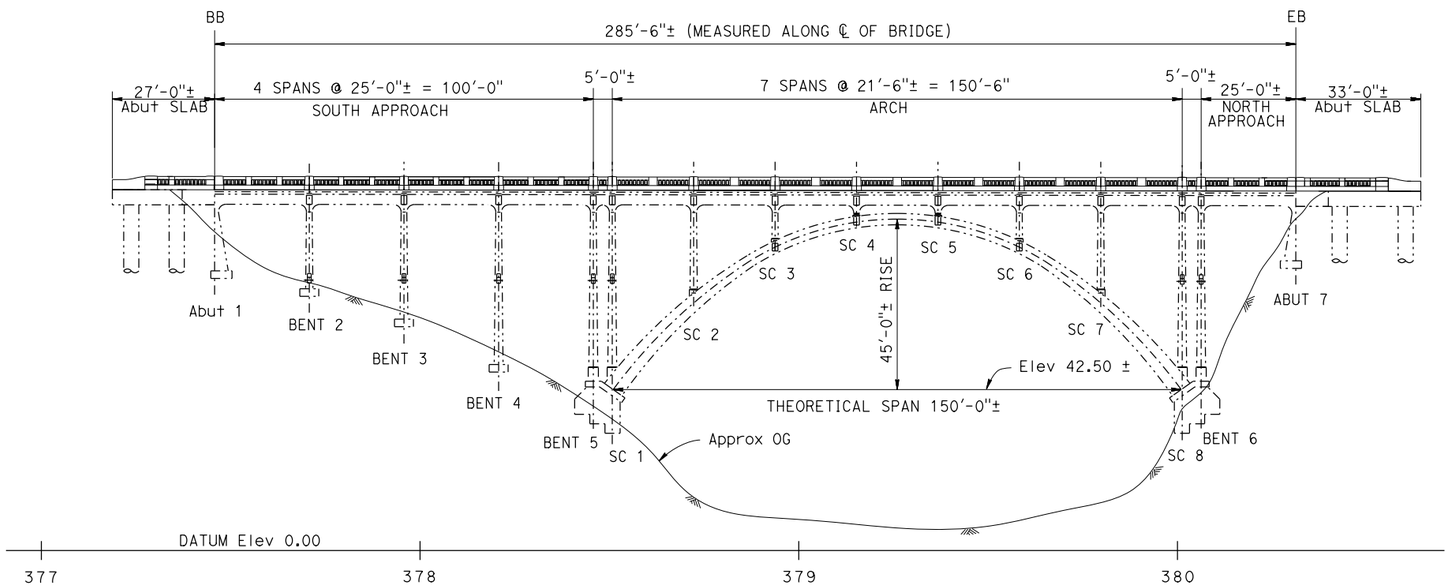


## ELEVATION

1" = 30'

NOTES:

1. Remove existing Overhang, Curb and Barrier, replace with new Overhang and Barrier Type 86H(Mod) extended to end of Abutment slab. Existing bridge rail not shown in "ELEVATION VIEW" for clarity.
2. Barrier Type 86H(Mod) shown.
3. Stage construction with one-way traffic control will be necessary.
4. Paint: "GARRAPATA CREEK BRIDGE 1931"
5. Paint: "Br. No. 44-0018"

LEGEND:

- INDICATES NEW CONSTRUCTION
- INDICATES EXISTING STRUCTURE
- INDICATES REMOVAL OF EXISTING CONCRETE BARRIER, END BLOCKS, CURB, 1" POLYESTER OVERLAY AND OVERHANG
- PREPARE CONCRETE DECK, FINISH AND PLACE 1" POLYESTER CONCRETE OVERLAY. MATCH EXISTING GRADE
- INDICATES REMOVAL OF EXISTING POLYESTER CONCRETE OVERLAY AT LOCATIONS OF NEW CONCRETE BARRIER TYPE 86H(MOD)

SC SPANDREL COLUMN

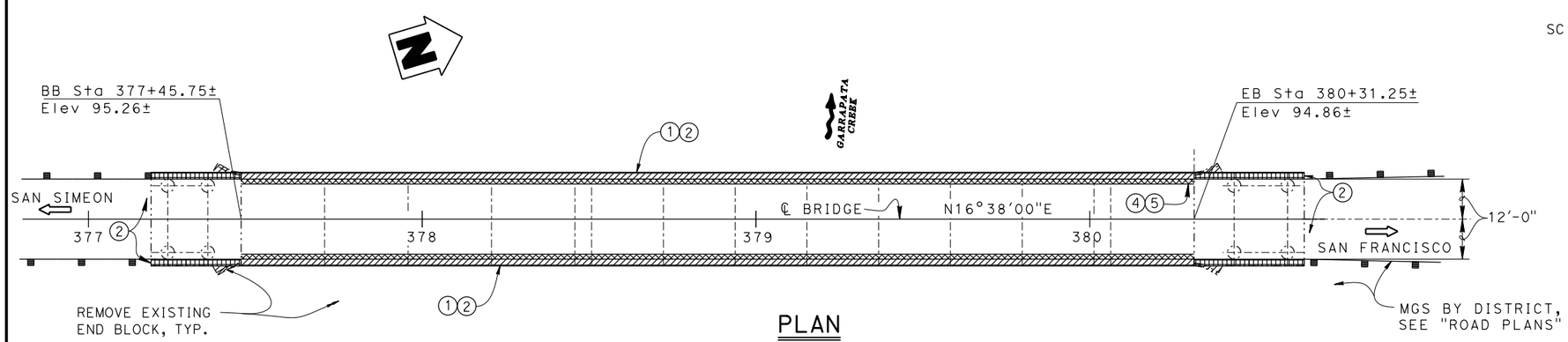


## PLAN

1" = 30'

NOTE:
THE CONTRACTOR SHALL VERIFY ALL CONTROLLING FIELD DIMENSIONS BEFORE ORDERING OR FABRICATING ANY MATERIAL.

| | | | | | | | |
|---|---|---|---|---|---|---|---|
| Matt Schott<br>BRANCH CHIEF | DESIGN | BY Rene Coria | CHECKED Jim Gutierrez | SEISMIC ANALYSIS | BY X | CHECKED X | STATE OF CALIFORNIA DEPARTMENT OF TRANSPORTATION |
| | DETAILS | BY Mohammad Sharif | CHECKED Rene Coria | LAYOUT | BY Rene Coria | CHECKED Mohammad Sharif | |
| | QUANTITIES | BY Rene Coria | CHECKED Mohammad Sharif | SPECIFICATIONS | BY X | PLANS AND SPECS COMPARED X | |

DIVISION OF ENGINEERING SERVICES BRIDGE DESIGN BRANCH 18

BRIDGE No. 44-0018 POST MILE 63.0

# GARRAPATA CREEK BRIDGE
# GENERAL PLAN

STRUCTURES DESIGN GENERAL PLAN SHEET (ENGLISH) (REVISION 2/8/2022)

DATE PLOTTED => 15-NOV-2022 TIME PLOTTED => 14:08
FILE => 44-0018-a-gp01.dgn USERNAME => s110279

ORIGINAL SCALE IN INCHES FOR REDUCED PLANS 0 1 2 3

UNIT: 3603
PROJECT NUMBER & PHASE: 0516000163

COUNTY/ROUTE: Mon/001
CONTRACT No.: 05-1H800

DISREGARD PRINTS BEARING EARLIER REVISION DATES

REVISION DATES: ~~9/12/22~~ 10/13/22 ~~10/06/22~~

SHEET 1 OF 15

| Dist | COUNTY | ROUTE | POST MILES TOTAL PROJECT | SHEET No. | TOTAL SHEETS |
|---|---|---|---|---|---|
| | | | | | |

REGISTERED CIVIL ENGINEER X DATE

PLANS APPROVAL DATE

REGISTERED PROFESSIONAL ENGINEER X No. X Exp. X CIVIL STATE OF CALIFORNIA

*THE STATE OF CALIFORNIA OR ITS OFFICERS OR AGENTS SHALL NOT BE RESPONSIBLE FOR THE ACCURACY OR COMPLETENESS OF SCANNED COPIES OF THIS PLAN SHEET.*

## STANDARD PLANS DATED 2022

| DETAIL | DESCRIPTION |
|---|---|
| A3A | ABBREVIATIONS (SHEET 1 OF 3) |
| A3B | ABBREVIATIONS (SHEET 2 OF 3) |
| A3C | ABBREVIATIONS (SHEET 3 OF 3) |
| A10A | LEGEND LINES AND SYMBOLS (SHEET 1 OF 5) |
| A10B | LEGEND LINES AND SYMBOLS (SHEET 2 OF 5) |
| A10C | LEGEND LINES AND SYMBOLS (SHEET 3 OF 5) |
| A10D | LEGEND LINES AND SYMBOLS (SHEET 4 OF 5) |
| A10E | LEGEND LINES AND SYMBOLS (SHEET 5 OF 5) |
| B7-8 | DECK DRAINAGE DETAIL |

## GENERAL NOTES:

DESIGN: AASHTO LRFD Bridge Design Specifications, 8th Edition with California Amendments

BARRIER LOADING: Test Level 4

DEAD LOAD: Includes 35 psf for future wearing surface

REINFORCED CONCRETE:

Structural Concrete (Polymer Fiber):
fy = 80 ksi
fy = 33 ksi (Existing Reinf)
f'c = 4.0 ksi, Polymer Fiber
n = 8

Concrete Barrier, Type 86(MOD):
fy = 60 ksi, Epoxy Coated
f'c = 3.6 ksi
n = 8

## INDEX TO PLANS


| SHEET NO. | TITLE |
|---|---|
| 1 | GENERAL PLAN |
| 2 | INDEX TO PLANS |
| 3 | OVERHANG DETAILS NO. 1 |
| 4 | OVERHANG DETAILS NO. 2 |
| 5 | CONCRETE BARRIER TYPE 86H(Mod) DETAILS NO. 1 |
| 6 | CONCRETE BARRIER TYPE 86H(Mod) DETAILS NO. 2 |
| 7 | CONCRETE BARRIER TYPE 86H(Mod) DETAILS NO. 3 |
| 8 | CONCRETE BARRIER TYPE 86H(Mod) DETAILS NO. 4 |
| 9 | CONCRETE BARRIER TYPE 86H(Mod) DETAILS NO. 5 |
| 10 | CONCRETE BARRIER TYPE 86H(Mod) DETAILS NO. 6 |
| 11 | CONCRETE BARRIER TYPE 86H(Mod) DETAILS NO. 7 |
| 12 | CONCRETE BARRIER TYPE 86H(Mod) DETAILS NO. 8 |
| 13 | CONCRETE BARRIER TYPE 86H(Mod) DETAILS NO. 9 |
| 14 | CONCRETE BARRIER TYPE 86H(Mod) DETAILS NO. 10 |
| 15 | CONCRETE BARRIER TYPE 86H(Mod) DETAILS NO. 11 |


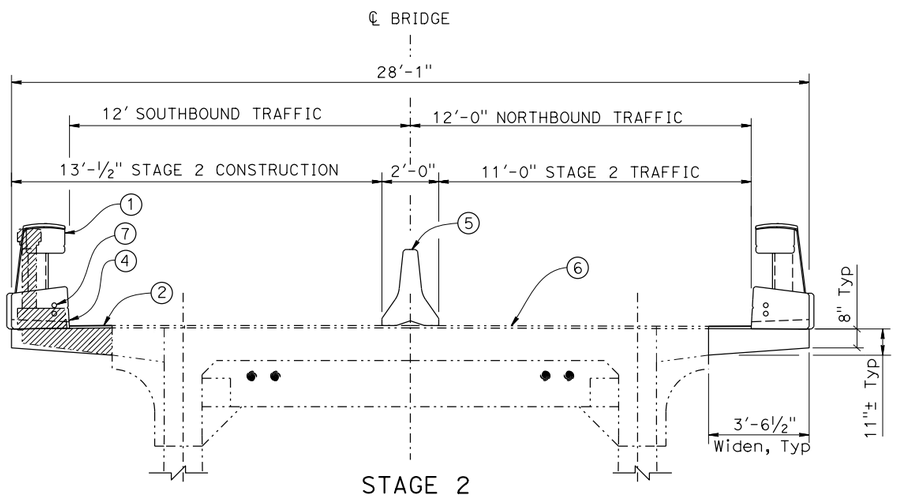


STAGE 2

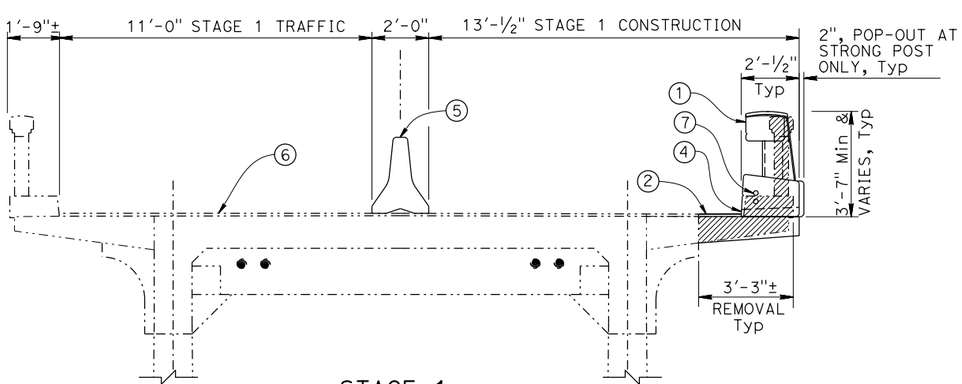


STAGE 1

## TYPICAL SECTION

⅜" = 1'-0"

NOTES:

1. Remove existing Overhang, Curb and Barrier, replace with new Overhang and Barrier Type 86H(Mod) extended to end of Abutment slab. Barrier to have integral color to match existing deck color.
2. New 1" polyester overlay to match existing slope and grade.
3. Stage construction with one-way traffic control will be necessary.
4. Scupper or drop-thru Deck Drains to be installed in or near new Barriers. See STANDARD PLANS B7-8 "SCUPPER DETAIL"
5. Temporary K-Rail, see "ROADWAY PLANS".
6. Existing 1" polyester overlay to remain.
7. 2 ea 1-1½ ø Conduit at each Barrier for future utilities.

LEGEND:

——— INDICATES NEW CONSTRUCTION

-·-·-·- INDICATES EXISTING STRUCTURE

INDICATES REMOVAL OF EXISTING CONCRETE BARRIER, END BLOCKS, CURB, 1" POLYESTER OVERLAY AND OVERHANG

PREPARE CONCRETE DECK, FINISH AND PLACE 1" POLYESTER CONCRETE OVERLAY. MATCH EXISTING GRADE

INDICATES REMOVAL OF EXISTING POLYESTER CONCRETE OVERLAY AT LOCATIONS OF NEW CONCRETE BARRIER TYPE 86H(MOD)

SC SPANDREL COLUMN

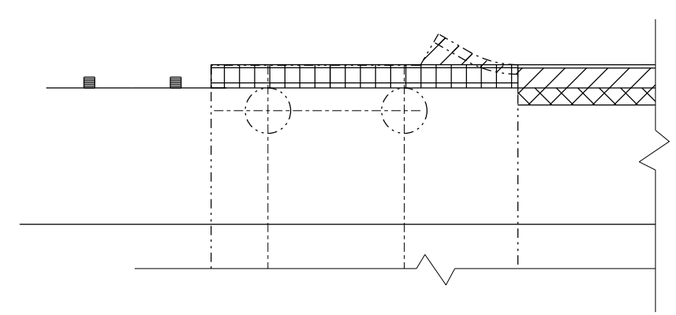

| | | | |
|---|---|---|---|
| DESIGN | BY Rene Coria | CHECKED X | |
| DETAILS | BY Mohammad Sharif | CHECKED X | |
| QUANTITIES | BY X | CHECKED X | |

STATE OF CALIFORNIA
DEPARTMENT OF TRANSPORTATION

DIVISION OF ENGINEERING SERVICES
BRIDGE DESIGN
BRANCH 18

BRIDGE No. 44-0018
POST MILE 63.0

# GARRAPATA CREEK BRIDGE
## INDEX TO PLAN

STRUCTURES DESIGN DETAIL SHEET (ENGLISH) (REVISION 3/10/2021)

DATE PLOTTED => 29-NOV-2022 TIME PLOTTED => 15:42
FILE => 44-0018-a-itp.dgn USERNAME => s110279

ORIGINAL SCALE IN INCHES FOR REDUCED PLANS 0 1 2 3

UNIT: 3603
PROJECT NUMBER & PHASE: 0516000163

COUNTY/ROUTE: Mon/001
CONTRACT No.: 05-1H800

DISREGARD PRINTS BEARING EARLIER REVISION DATES

REVISION DATES: 9/12/22 11/29/22 11/15/22

SHEET 2 OF 15

| Dist | COUNTY | ROUTE | POST MILES TOTAL PROJECT | SHEET No. | TOTAL SHEETS |
|---|---|---|---|---|---|
| | | | | | |

REGISTERED CIVIL ENGINEER X DATE

PLANS APPROVAL DATE

REGISTERED PROFESSIONAL ENGINEER X No. X Exp. X CIVIL STATE OF CALIFORNIA

*THE STATE OF CALIFORNIA OR ITS OFFICERS OR AGENTS SHALL NOT BE RESPONSIBLE FOR THE ACCURACY OR COMPLETENESS OF SCANNED COPIES OF THIS PLAN SHEET.*

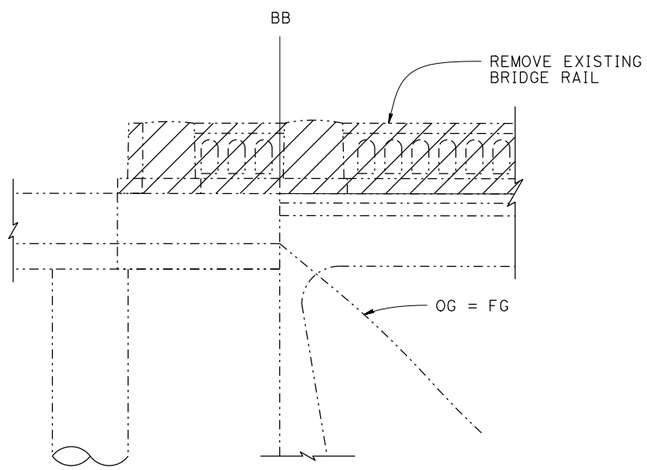


## ABUTMENT ELEVATION
1/4" = 1'-0"

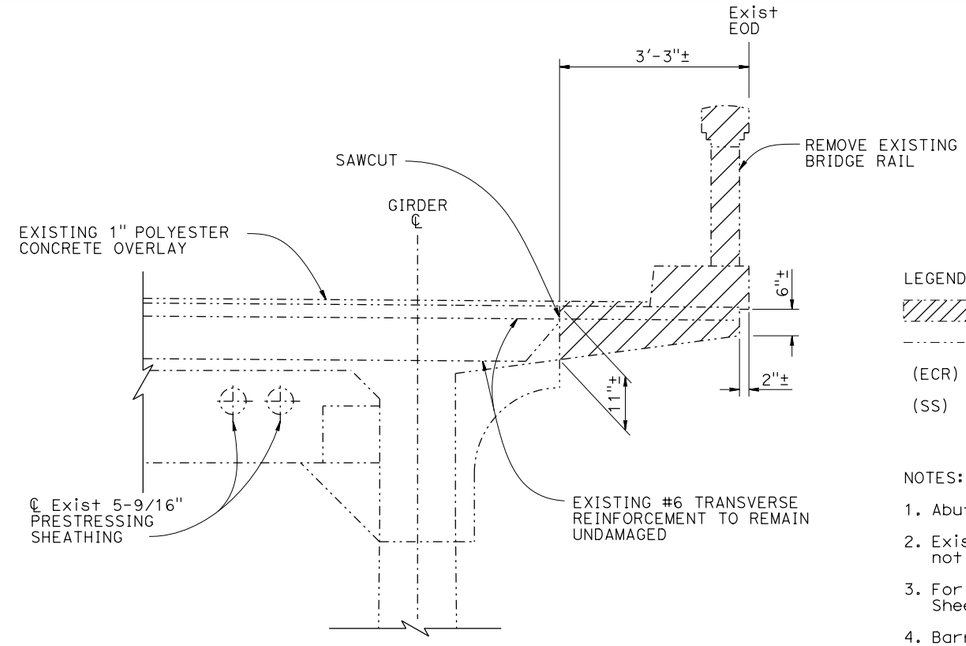


## REMOVAL SECTION A-A
3/4" = 1'-0"

LEGEND:

- Bridge Removal (Portion)
- Existing Structure
- (ECR) Epoxy coated reinforcement bar
- (SS) Stainless steel reinforcement bar

NOTES:

1. Abutment 1 shown, Abutment 7 similar.
2. Exist Concrete Barrier Rail not shown in Plan View for Clarity.
3. For Section B-B, C-C and D-D, see Sheet "OVERHANG DETAILS NO. 2".
4. Barrier Reinforcement not shown for Clarity, see "CONCRETE BARRIER TYPE 86H(MOD) DETAILS No. 7, 8, 9, AND 10" sheets for details.
5. Match Existing Grade and Cross Slope.
6. All Concrete shall be Structural Concrete Bridge (Polymer Fiber), except for concrete barrier.

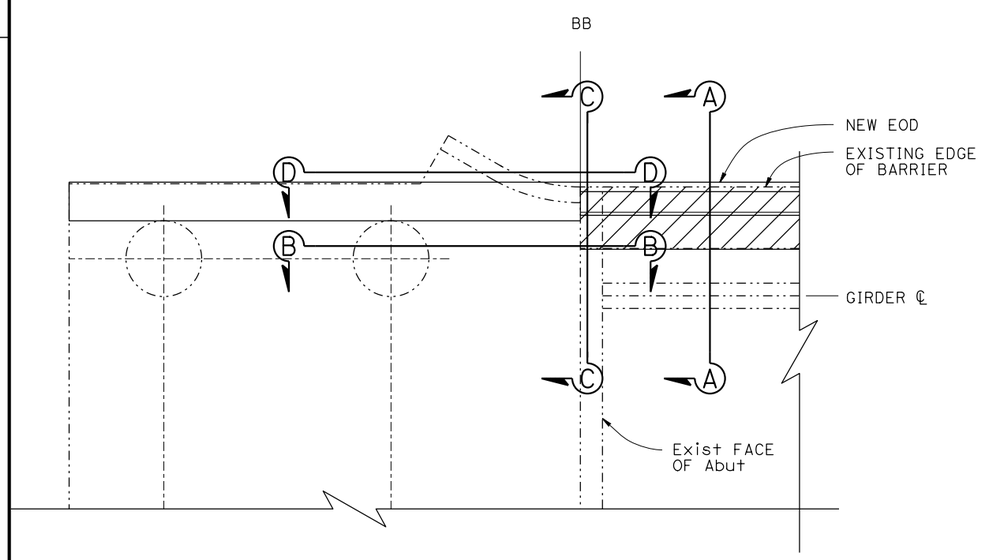


## ABUTMENT PART PLAN
1/4" = 1'-0"

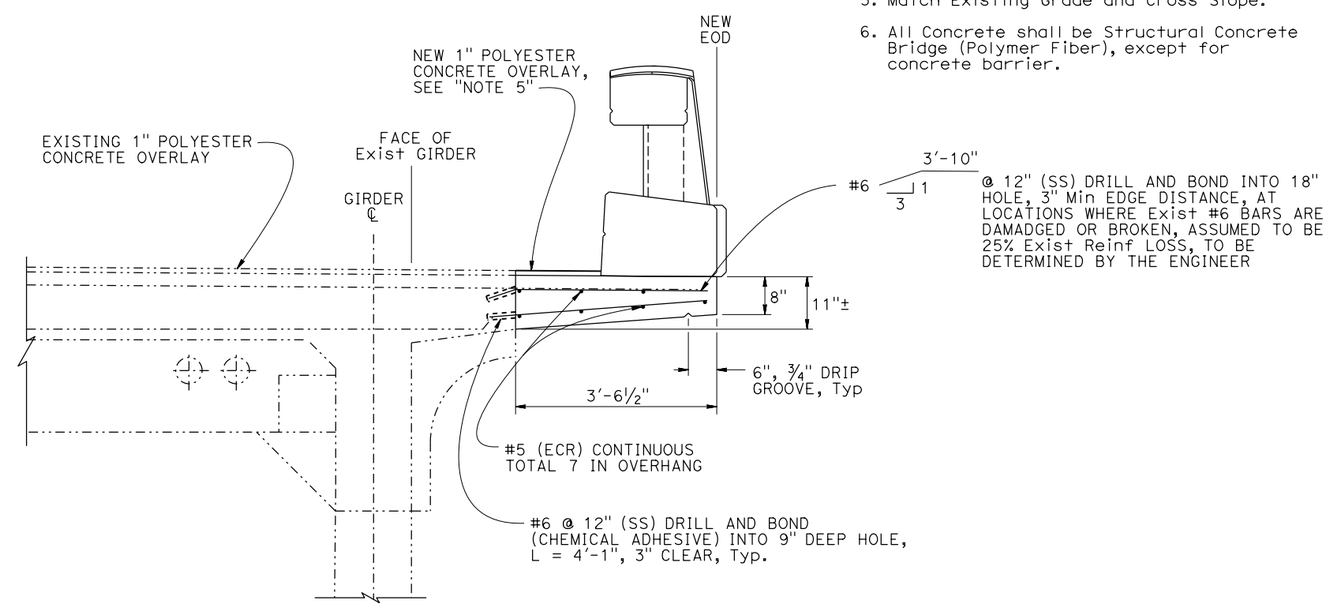


## RECONSTRUCTION SECTION A-A
3/4" = 1'-0"

| | | | |
|---|---|---|---|
| DESIGN | BY Rene Coria | CHECKED X | |
| DETAILS | BY Mohammad Sharif | CHECKED X | |
| QUANTITIES | BY X | CHECKED X | |

STATE OF CALIFORNIA
DEPARTMENT OF TRANSPORTATION

DIVISION OF ENGINEERING SERVICES
BRIDGE DESIGN
BRANCH 18

BRIDGE No. 44-0018
POST MILE 63.0

# GARRAPATA CREEK BRIDGE
# OVERHANG DETAILS NO. 1

STRUCTURES DESIGN DETAIL SHEET (ENGLISH) (REVISION 3/10/2021)

DATE PLOTTED => 15-NOV-2022 TIME PLOTTED => 14:09
FILE => 44-0018-t-brdt01.dgn USERNAME => s110279

ORIGINAL SCALE IN INCHES FOR REDUCED PLANS 0 1 2 3

UNIT: 3603
PROJECT NUMBER & PHASE: 0516000163

COUNTY/ROUTE: Mon/001
CONTRACT No.: 05-1H800

DISREGARD PRINTS BEARING EARLIER REVISION DATES

REVISION DATES: 9/12/22 9/20/22 10/05/22

SHEET 3 OF 15

| Dist | COUNTY | ROUTE | POST MILES TOTAL PROJECT | SHEET No. | TOTAL SHEETS |
|---|---|---|---|---|---|
| | | | | | |

REGISTERED CIVIL ENGINEER X DATE

PLANS APPROVAL DATE

REGISTERED PROFESSIONAL ENGINEER X No. X Exp. X CIVIL STATE OF CALIFORNIA

*THE STATE OF CALIFORNIA OR ITS OFFICERS OR AGENTS SHALL NOT BE RESPONSIBLE FOR THE ACCURACY OR COMPLETENESS OF SCANNED COPIES OF THIS PLAN SHEET.*

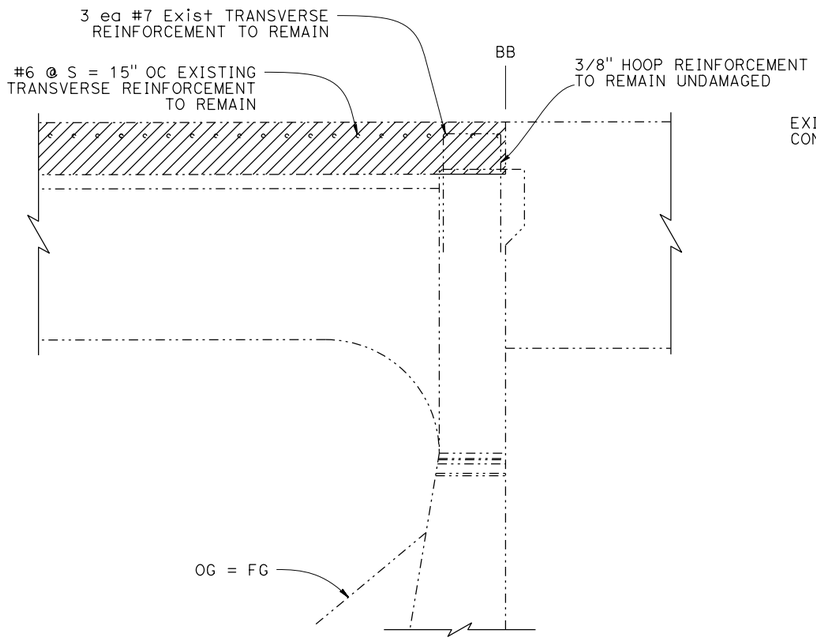


## REMOVAL SECTION B-B
3/4" = 1'-0"

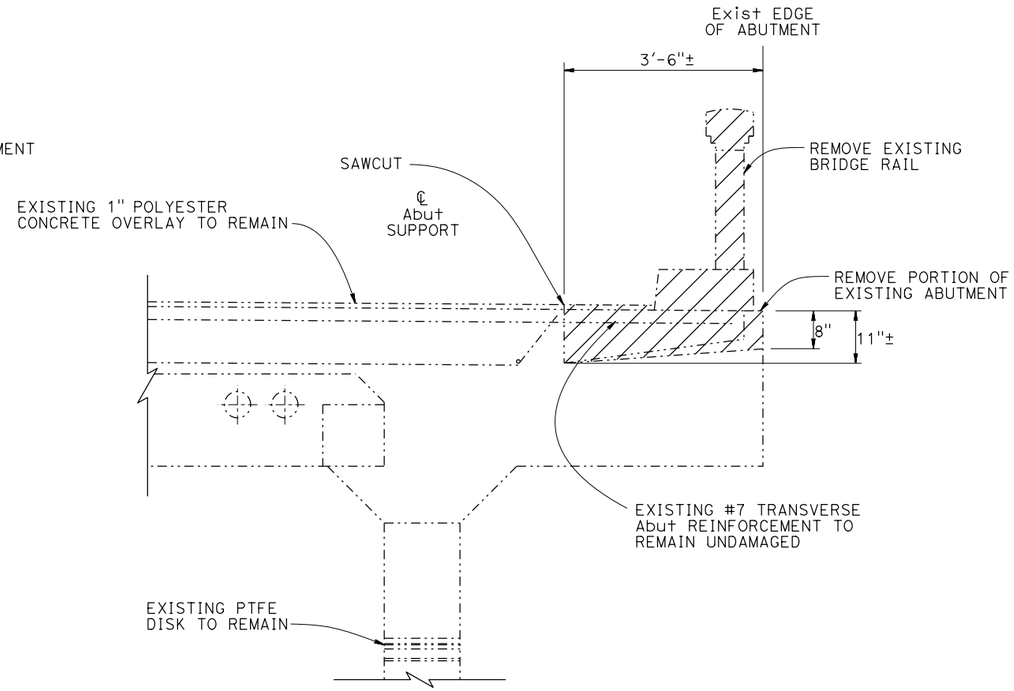


## REMOVAL SECTION C-C
3/4" = 1'-0"

NOTES:

1. For Location of Section B-B and C-C, see Sheet "OVERHANG DETAILS NO. 1".
2. Abut 1 shown, Abut 7 similar.
3. Barrier Reinforcement not shown for Clarity, see "CONCRETE BARRIER TYPE 86H(MOD) DETAILS No. 7, 8, 9, AND 10" sheets for details.
4. Match Existing Grade and Cross Slope.
5. New Deck Reinforcement, see "OVERHANG DETAILS NO. 1" and "BARRIER TYPE 86H(Mod)" Sheets.
6. Overhang Concrete shall be Structural Concrete, Bridge (Polymer Fiber).

LEGEND:

- Bridge Removal (Portion)
- Existing Structure
- (ECR) Epoxy coated reinforcement bar
- (SS) Stainless steel reinforcement bar

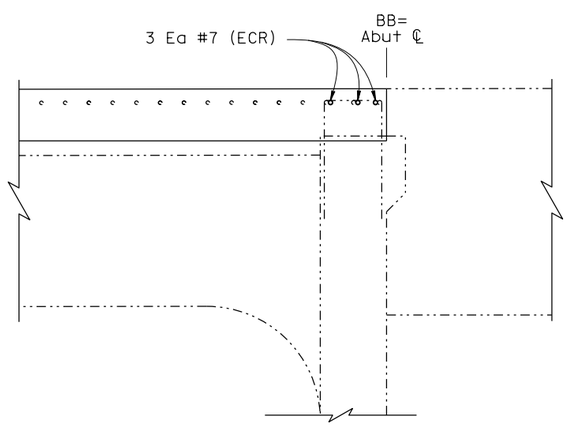


## RECONSTRUCTION SECTION B-B
3/4" = 1'-0"

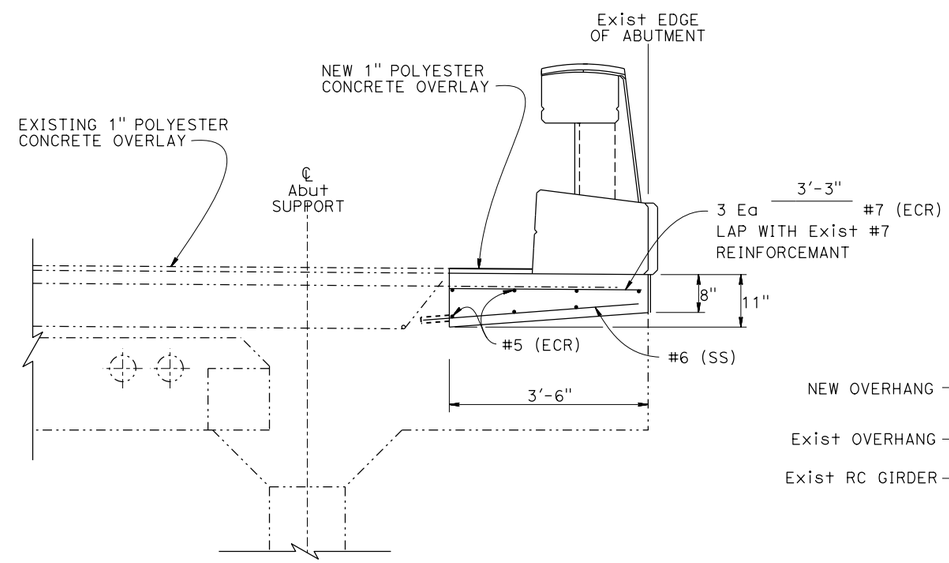


## RECONSTRUCTION SECTION C-C
3/4" = 1'-0"

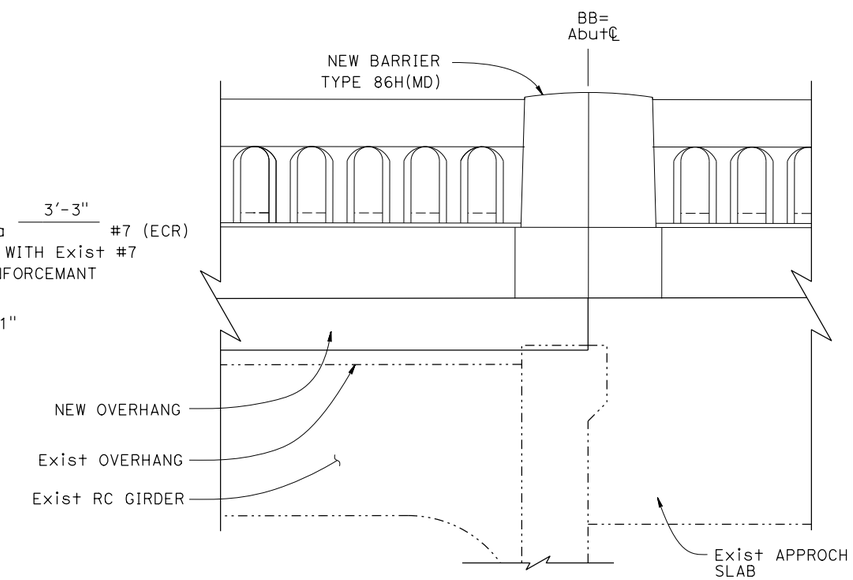


## SECTION D-D
3/4" = 1'-0"

| | BY | CHECKED |
|---|---|---|
| DESIGN | Rene Coria | X |
| DETAILS | Mohammad Sharif | X |
| QUANTITIES | X | X |

STATE OF CALIFORNIA DEPARTMENT OF TRANSPORTATION

DIVISION OF ENGINEERING SERVICES BRIDGE DESIGN BRANCH 18

BRIDGE No. 44-0018 POST MILE 63.0

# GARRAPATA CREEK BRIDGE
# OVERHANG DETAILS NO. 2

STRUCTURES DESIGN DETAIL SHEET (ENGLISH) (REVISION 3/10/2021)

DATE PLOTTED => 15-NOV-2022 TIME PLOTTED => 14:09
FILE => 44-0018-t-brdt02.dgn USERNAME => s110279

ORIGINAL SCALE IN INCHES FOR REDUCED PLANS 0 1 2 3

UNIT: 3603
PROJECT NUMBER & PHASE: 0516000163

COUNTY/ROUTE: Mon/001
CONTRACT No.: 05-1H880

DISREGARD PRINTS BEARING EARLIER REVISION DATES

REVISION DATES: 9/12/22 9/28/22 10/05/22

SHEET 4 OF 15

| Dist | COUNTY | ROUTE | POST MILES TOTAL PROJECT | SHEET No. | TOTAL SHEETS |
|---|---|---|---|---|---|
| | | | | | |

REGISTERED CIVIL ENGINEER X DATE

PLANS APPROVAL DATE

REGISTERED PROFESSIONAL ENGINEER X No. X Exp. X CIVIL STATE OF CALIFORNIA

*THE STATE OF CALIFORNIA OR ITS OFFICERS OR AGENTS SHALL NOT BE RESPONSIBLE FOR THE ACCURACY OR COMPLETENESS OF SCANNED COPIES OF THIS PLAN SHEET.*

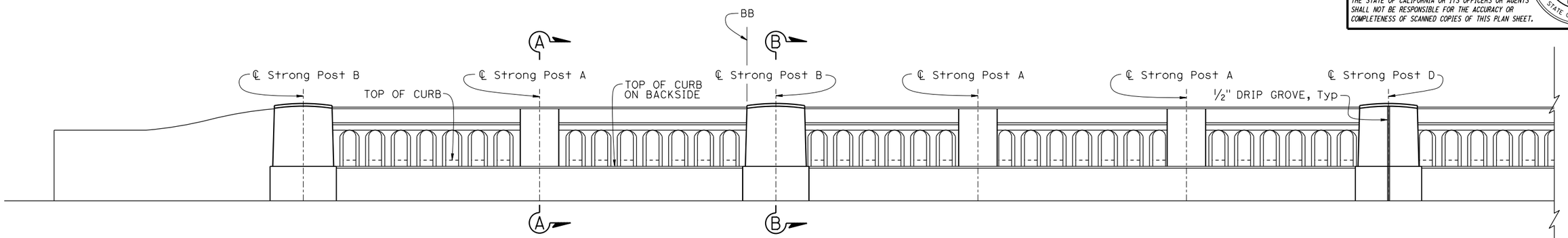


## BACKSIDE ELEVATION

½" = 1'-0"

NOTE: Backside View (from ocean side) 6" Balusters

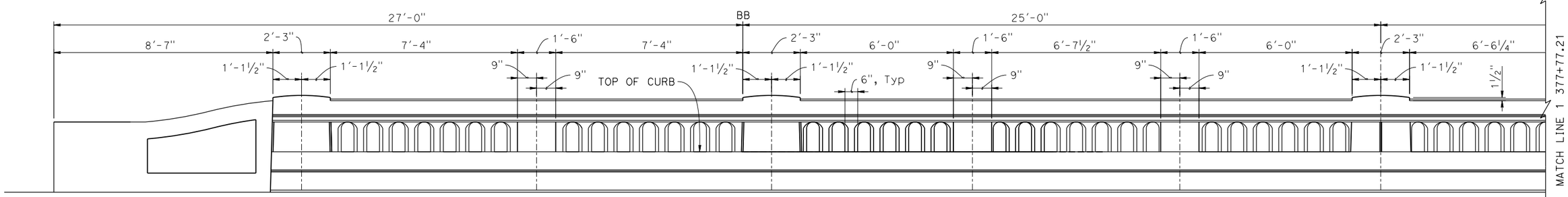


## TRAFFIC SIDE ELEVATION

½" = 1'-0"

NOTE: Front View (from traffic side) 6" Balusters

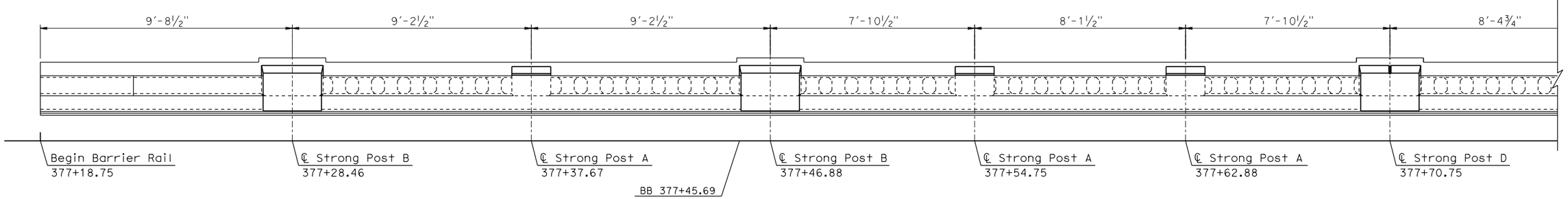


## PLAN

½" = 1'-0"

| | BY | CHECKED |
|---|---|---|
| DESIGN | Kimberly Mori | X |
| DETAILS | David Elliott | X |
| QUANTITIES | X | X |

STATE OF CALIFORNIA DEPARTMENT OF TRANSPORTATION

DIVISION OF ENGINEERING SERVICES OFFICE OF DESIGN AND TECHNICAL SERVICES SPECIAL DESIGN BRANCH B

BRIDGE No. 44-0018

POST MILE 63.0

# GARRAPATA CREEK BRIDGE

## CONCRETE BARRIER TYPE 86H DETAILS No. 1

STRUCTURES DESIGN DETAIL SHEET (ENGLISH) (REVISION 3/10/2021)

DATE PLOTTED => 7-SEP-2022 TIME PLOTTED => 08:31

FILE => 44-0018-c-sp01.dgn USERNAME => s123982

ORIGINAL SCALE IN INCHES FOR REDUCED PLANS 0 1 2 3

UNIT: 3619

PROJECT NUMBER & PHASE: 05160001631

COUNTY/ROUTE: Mon/1

CONTRACT No.: 05-1H8004

DISREGARD PRINTS BEARING EARLIER REVISION DATES

REVISION DATES: ~~8-1-22~~ 9-1-22

SHEET X OF X

| Dist | COUNTY | ROUTE | POST MILES TOTAL PROJECT | SHEET No. | TOTAL SHEETS |
|---|---|---|---|---|---|
| | | | | | |

REGISTERED CIVIL ENGINEER X DATE

PLANS APPROVAL DATE

REGISTERED PROFESSIONAL ENGINEER X No. X Exp. X CIVIL STATE OF CALIFORNIA

*THE STATE OF CALIFORNIA OR ITS OFFICERS OR AGENTS SHALL NOT BE RESPONSIBLE FOR THE ACCURACY OR COMPLETENESS OF SCANNED COPIES OF THIS PLAN SHEET.*

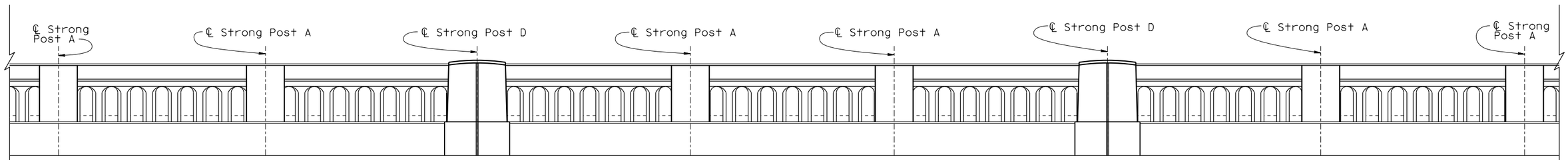


## BACKSIDE ELEVATION

½" = 1'-0"

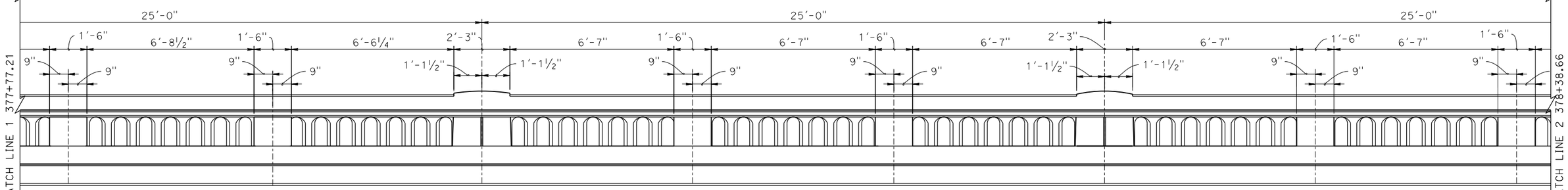


## TRAFFIC SIDE ELEVATION

½" = 1'-0"

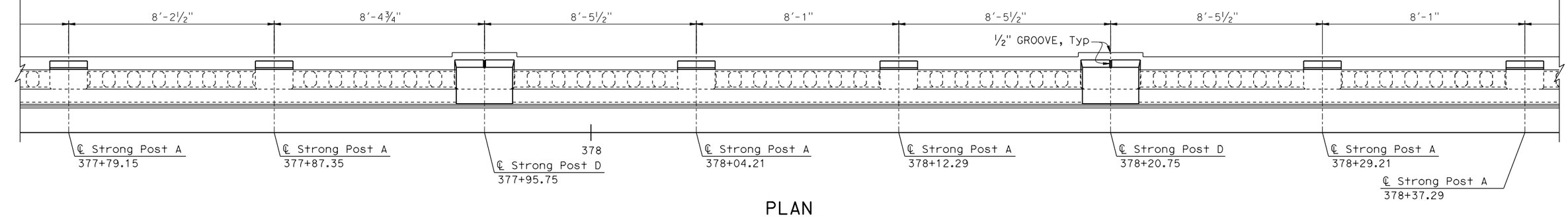


## PLAN

½" = 1'-0"

| | BY | CHECKED |
|---|---|---|
| DESIGN | Kimberly Mori | X |
| DETAILS | David Elliott | X |
| QUANTITIES | X | X |

STATE OF CALIFORNIA
DEPARTMENT OF TRANSPORTATION

DIVISION OF ENGINEERING SERVICES
OFFICE OF DESIGN AND TECHNICAL SERVICES
SPECIAL DESIGN BRANCH B

BRIDGE No. 44-0018
POST MILE 63.0

# GARRAPATA CREEK BRIDGE

## CONCRETE BARRIER TYPE 86H DETAILS No. 2

STRUCTURES DESIGN DETAIL SHEET (ENGLISH) (REVISION 3/10/2021)

DATE PLOTTED => 7-SEP-2022 TIME PLOTTED => 08:31
FILE => 44-0018-c-sp02.dgn USERNAME => s123982

ORIGINAL SCALE IN INCHES FOR REDUCED PLANS 0 1 2 3

UNIT: 3619
PROJECT NUMBER & PHASE: 05160001631

COUNTY/ROUTE: Mon/1
CONTRACT No.: 05-1H8004

DISREGARD PRINTS BEARING EARLIER REVISION DATES

REVISION DATES: 8-1-22 9-1-22

SHEET X OF X

| Dist | COUNTY | ROUTE | POST MILES TOTAL PROJECT | SHEET No. | TOTAL SHEETS |
|---|---|---|---|---|---|
| | | | | | |

REGISTERED CIVIL ENGINEER X DATE

PLANS APPROVAL DATE

REGISTERED PROFESSIONAL ENGINEER No. X Exp. X CIVIL STATE OF CALIFORNIA

*THE STATE OF CALIFORNIA OR ITS OFFICERS OR AGENTS SHALL NOT BE RESPONSIBLE FOR THE ACCURACY OR COMPLETENESS OF SCANNED COPIES OF THIS PLAN SHEET.*

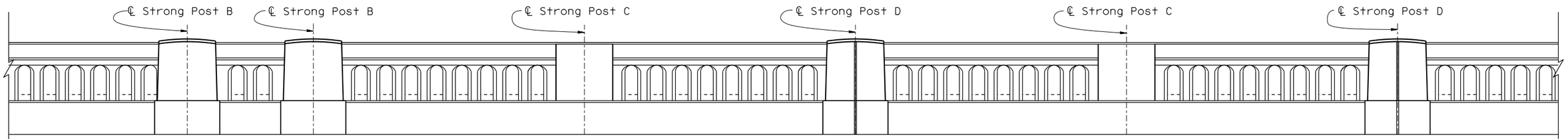


## BACKSIDE ELEVATION
½" = 1'-0"

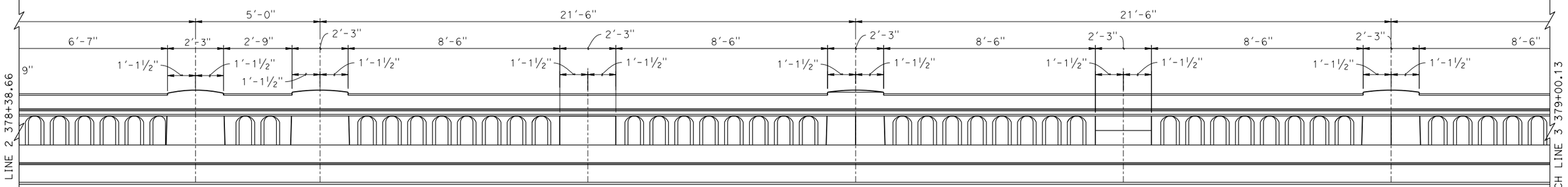


## TRAFFIC SIDE ELEVATION
½" = 1'-0"

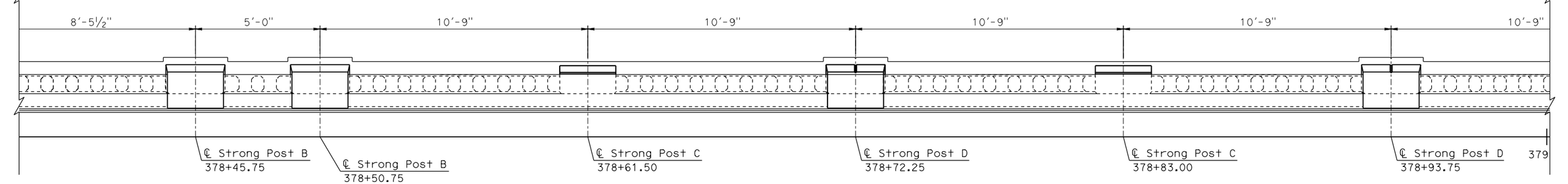


## PLAN
½" = 1'-0"

| | BY | CHECKED |
|---|---|---|
| DESIGN | X | X |
| DETAILS | X | X |
| QUANTITIES | X | X |

STATE OF CALIFORNIA
DEPARTMENT OF TRANSPORTATION

DIVISION OF ENGINEERING SERVICES
OFFICE OF DESIGN AND TECHNICAL SERVICES
SPECIAL DESIGN BRANCH B

BRIDGE No. 44-0018
POST MILE 63.0

# GARRAPATA CREEK BRIDGE
## CONCRETE BARRIER TYPE 86H DETAILS No. 3

STRUCTURES DESIGN DETAIL SHEET (ENGLISH) (REVISION 3/10/2021)

DATE PLOTTED => 7-SEP-2022 TIME PLOTTED => 08:31
FILE => 44-0018-c-sp03.dgn USERNAME => s123982

ORIGINAL SCALE IN INCHES FOR REDUCED PLANS 0 1 2 3

UNIT: 3619
PROJECT NUMBER & PHASE: 05160001631

COUNTY/ROUTE: Mon/1
CONTRACT No.: 05-1H8004

DISREGARD PRINTS BEARING EARLIER REVISION DATES

REVISION DATES: ~~8-5-22~~ 9-1-22

SHEET X OF X

| Dist | COUNTY | ROUTE | POST MILES TOTAL PROJECT | SHEET No. | TOTAL SHEETS |
|---|---|---|---|---|---|
| | | | | | |

REGISTERED CIVIL ENGINEER X DATE

PLANS APPROVAL DATE

REGISTERED PROFESSIONAL ENGINEER No. X Exp. X CIVIL STATE OF CALIFORNIA

*THE STATE OF CALIFORNIA OR ITS OFFICERS OR AGENTS SHALL NOT BE RESPONSIBLE FOR THE ACCURACY OR COMPLETENESS OF SCANNED COPIES OF THIS PLAN SHEET.*

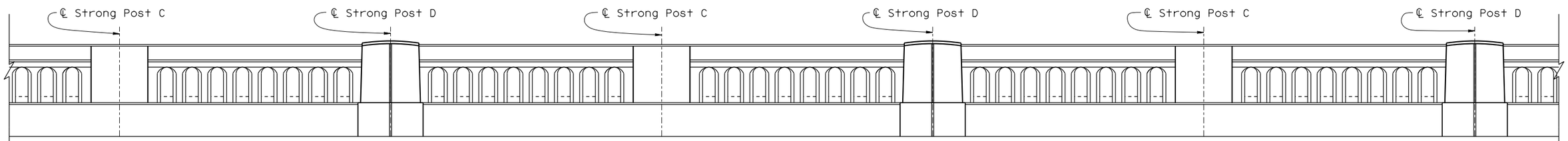


## BACKSIDE ELEVATION

½" = 1'-0"

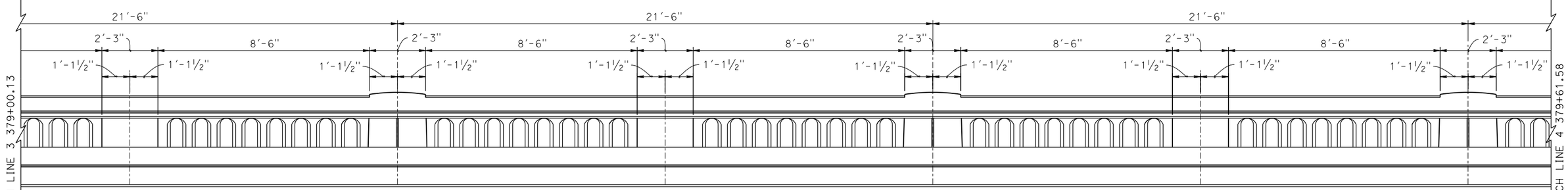


## TRAFFIC SIDE ELEVATION

½" = 1'-0"

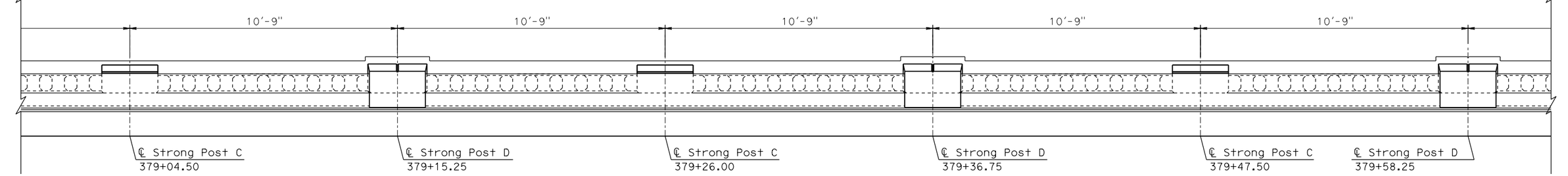


## PLAN

½" = 1'-0"

| | BY | CHECKED |
|---|---|---|
| DESIGN | Kimberly Mori | X |
| DETAILS | David Elliott | X |
| QUANTITIES | X | X |

STATE OF CALIFORNIA
DEPARTMENT OF TRANSPORTATION

DIVISION OF ENGINEERING SERVICES
OFFICE OF DESIGN AND TECHNICAL SERVICES
SPECIAL DESIGN BRANCH B

BRIDGE No. 44-0018
POST MILE 63.0

# GARRAPATA CREEK BRIDGE

## CONCRETE BARRIER TYPE 86H DETAILS No. 4

STRUCTURES DESIGN DETAIL SHEET
(ENGLISH) (REVISION 3/10/2021)

DATE PLOTTED => 7-SEP-2022 TIME PLOTTED => 08:31
FILE => 44-0018-c-sp04.dgn USERNAME => s123982

ORIGINAL SCALE IN INCHES FOR REDUCED PLANS 0 1 2 3

UNIT: 3619
PROJECT NUMBER & PHASE: 05160001631

COUNTY/ROUTE: Mon/1
CONTRACT No.: 05-1H8004

DISREGARD PRINTS BEARING EARLIER REVISION DATES

REVISION DATES: ~~8-5-22~~ 9-1-22

SHEET X OF X

| Dist | COUNTY | ROUTE | POST MILES TOTAL PROJECT | SHEET No. | TOTAL SHEETS |
|---|---|---|---|---|---|
| | | | | | |

REGISTERED CIVIL ENGINEER X DATE

PLANS APPROVAL DATE

REGISTERED PROFESSIONAL ENGINEER X No. X Exp. X CIVIL STATE OF CALIFORNIA

*THE STATE OF CALIFORNIA OR ITS OFFICERS OR AGENTS SHALL NOT BE RESPONSIBLE FOR THE ACCURACY OR COMPLETENESS OF SCANNED COPIES OF THIS PLAN SHEET.*

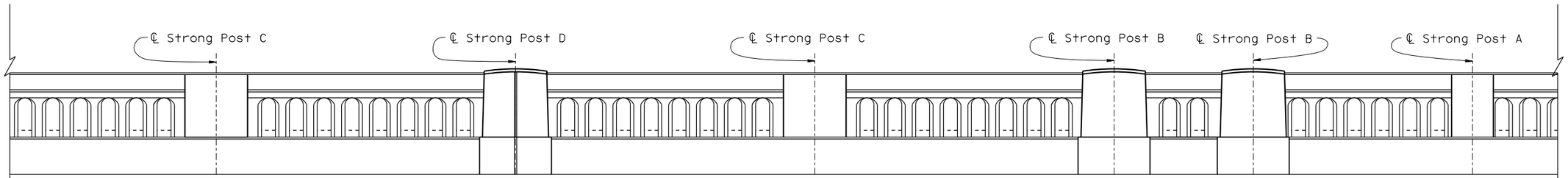


## BACKSIDE ELEVATION
½" = 1'-0"

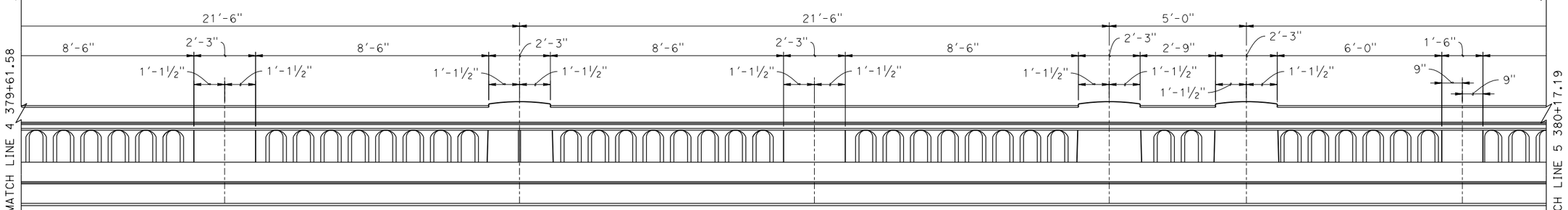


## TRAFFIC SIDE ELEVATION
½" = 1'-0"

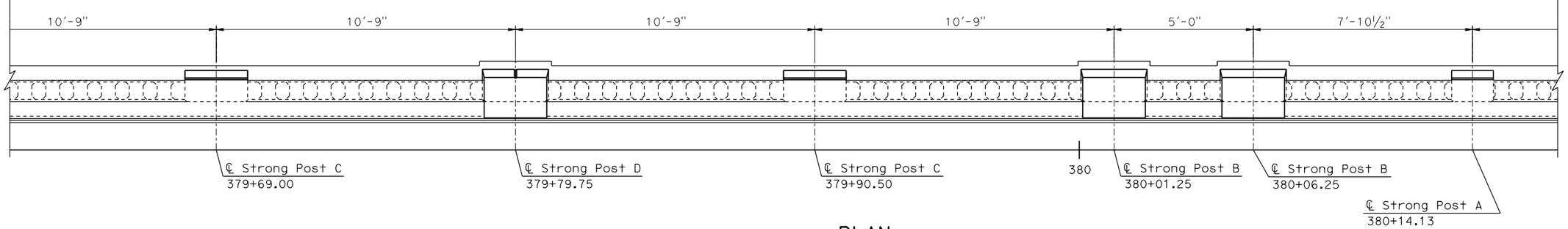


## PLAN
½" = 1'-0"

| | BY | CHECKED |
|---|---|---|
| DESIGN | Kimberly Mori | X |
| DETAILS | David Elliott | X |
| QUANTITIES | X | X |

STATE OF CALIFORNIA
DEPARTMENT OF TRANSPORTATION

DIVISION OF ENGINEERING SERVICES
OFFICE OF DESIGN AND TECHNICAL SERVICES
SPECIAL DESIGN BRANCH **B**

BRIDGE No. 44-0018
POST MILE 63.0

# GARRAPATA CREEK BRIDGE
## CONCRETE BARRIER TYPE 86H DETAILS No. 5

STRUCTURES DESIGN DETAIL SHEET
(ENGLISH) (REVISION 3/10/2021)

DATE PLOTTED => 7-SEP-2022 TIME PLOTTED => 08:31
FILE => 44-0018-c-sp05.dgn USERNAME => s123982

ORIGINAL SCALE IN INCHES FOR REDUCED PLANS 0 1 2 3

UNIT: 3619
PROJECT NUMBER & PHASE: 05160001631

COUNTY/ROUTE: Mon/1
CONTRACT No.: 05-1H8004

DISREGARD PRINTS BEARING EARLIER REVISION DATES

| REVISION DATES | | | | SHEET | OF |
|---|---|---|---|---|---|
| ~~8-5-22~~ | 9-1-22 | | | X | X |

| Dist | COUNTY | ROUTE | POST MILES TOTAL PROJECT | SHEET No. | TOTAL SHEETS |
|---|---|---|---|---|---|
| | | | | | |

REGISTERED CIVIL ENGINEER X DATE

PLANS APPROVAL DATE

REGISTERED PROFESSIONAL ENGINEER X No. X Exp. X CIVIL STATE OF CALIFORNIA

*THE STATE OF CALIFORNIA OR ITS OFFICERS OR AGENTS SHALL NOT BE RESPONSIBLE FOR THE ACCURACY OR COMPLETENESS OF SCANNED COPIES OF THIS PLAN SHEET.*

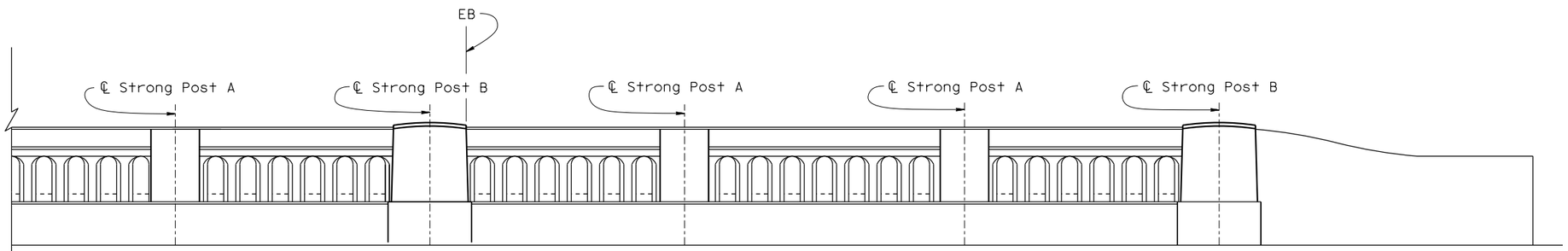


## BACKSIDE ELEVATION
½" = 1'-0"

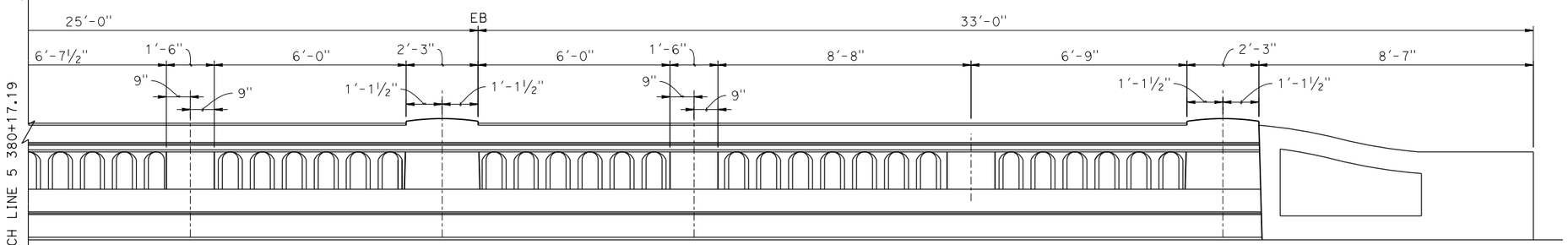


## TRAFFIC SIDE ELEVATION
½" = 1'-0"

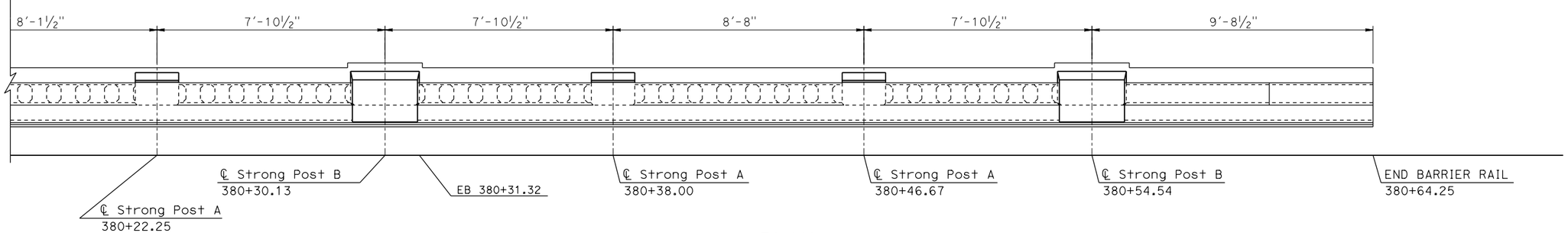


## PLAN
½" = 1'-0"

| | BY | CHECKED |
|---|---|---|
| DESIGN | Kimberly Mori | X |
| DETAILS | David Elliott | X |
| QUANTITIES | X | X |

STATE OF CALIFORNIA
DEPARTMENT OF TRANSPORTATION

DIVISION OF ENGINEERING SERVICES
OFFICE OF DESIGN AND TECHNICAL SERVICES
SPECIAL DESIGN BRANCH B

BRIDGE No. 44-0018
POST MILE 63.0

# GARRAPATA CREEK BRIDGE
## CONCRETE BARRIER TYPE 86H DETAILS No. 6

STRUCTURES DESIGN DETAIL SHEET
(ENGLISH) (REVISION 3/10/2021)

DATE PLOTTED => 7-SEP-2022 TIME PLOTTED => 08:32
FILE => 44-0018-c-sp06.dgn USERNAME => s123982

ORIGINAL SCALE IN INCHES FOR REDUCED PLANS 0 1 2 3

UNIT: 3619
PROJECT NUMBER & PHASE: 05160001631

COUNTY/ROUTE: Mon/1
CONTRACT No.: 05-1H8004

DISREGARD PRINTS BEARING EARLIER REVISION DATES

REVISION DATES: 8-5-22 9-1-22

SHEET X OF X

| Dist | COUNTY | ROUTE | POST MILES TOTAL PROJECT | SHEET No. | TOTAL SHEETS |
|---|---|---|---|---|---|
| | | | | | |

REGISTERED CIVIL ENGINEER X DATE

PLANS APPROVAL DATE

REGISTERED PROFESSIONAL ENGINEER No. X X Exp. X CIVIL STATE OF CALIFORNIA

*THE STATE OF CALIFORNIA OR ITS OFFICERS OR AGENTS SHALL NOT BE RESPONSIBLE FOR THE ACCURACY OR COMPLETENESS OF SCANNED COPIES OF THIS PLAN SHEET.*

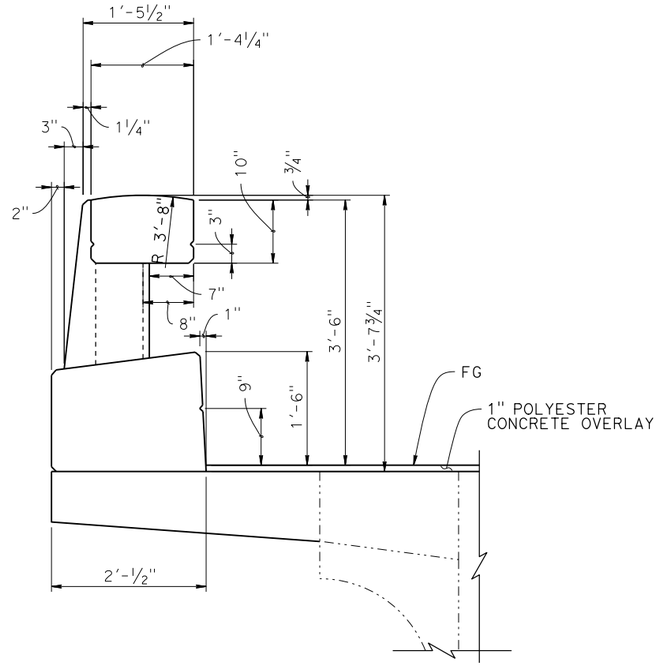


## TYPICAL SECTION

1" = 1'-0"

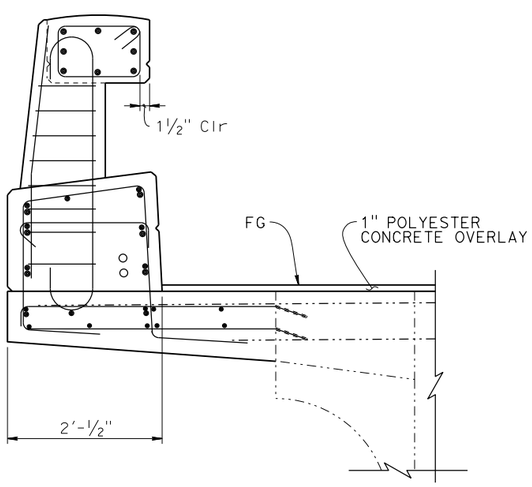


## TYPICAL SECTION - TYPE 86H

1" = 1'-0"

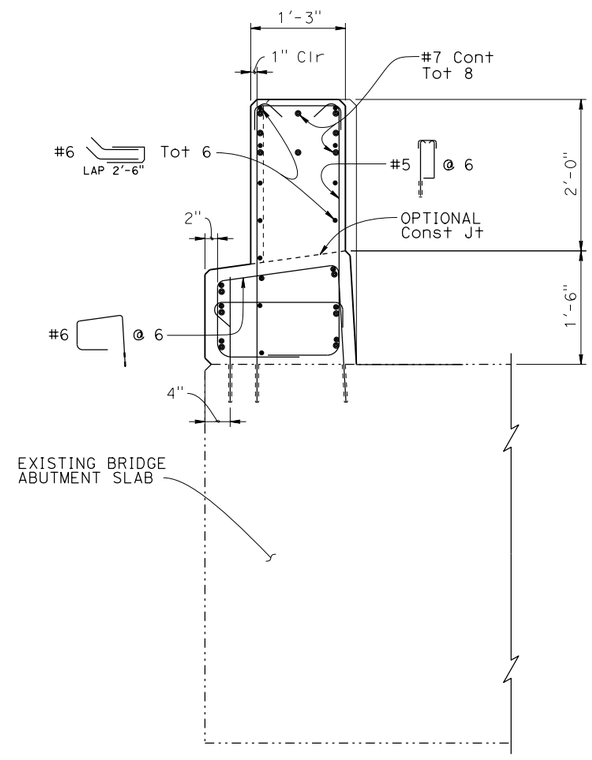


## SECTION D-D

1" = 1'-0"

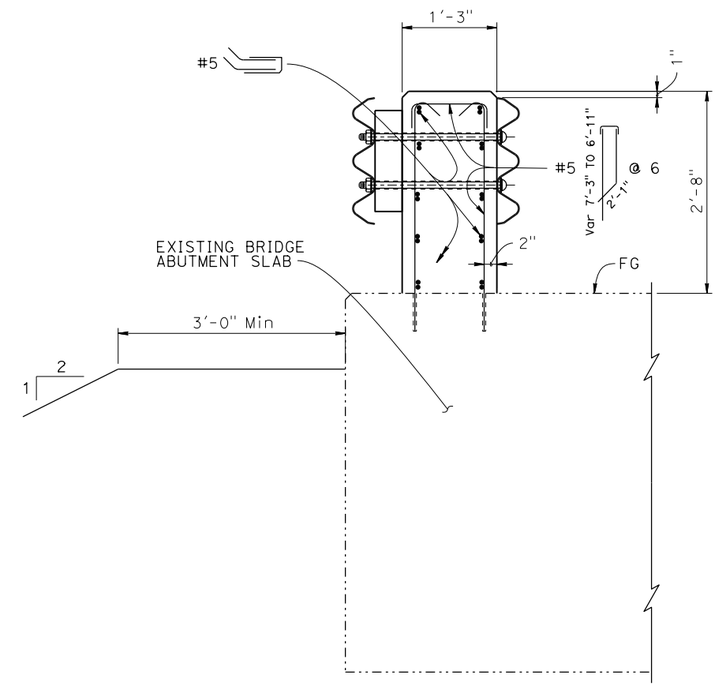


## SECTION E-E

1" = 1'-0"

| | | | |
|---|---|---|---|
| DESIGN | BY Kimberly Mori | CHECKED X | |
| DETAILS | BY David Elliott | CHECKED X | |
| QUANTITIES | BY X | CHECKED X | |

STATE OF CALIFORNIA
DEPARTMENT OF TRANSPORTATION

DIVISION OF ENGINEERING SERVICES
OFFICE OF DESIGN AND TECHNICAL SERVICES
SPECIAL DESIGN BRANCH B

BRIDGE No. 44-0018
POST MILE 63.0

# GARRAPATA CREEK BRIDGE

## CONCRETE BARRIER TYPE 86H DETAILS No. 7

STRUCTURES DESIGN DETAIL SHEET (ENGLISH) (REVISION 3/10/2021)

DATE PLOTTED => 7-SEP-2022 TIME PLOTTED => 08:32
FILE => 44-0018-c-sp07.dgn USERNAME => s123982

ORIGINAL SCALE IN INCHES FOR REDUCED PLANS 0 1 2 3

UNIT: 3619
PROJECT NUMBER & PHASE: 05160001631

COUNTY/ROUTE: Mon/1
CONTRACT No.: 05-1H8004

DISREGARD PRINTS BEARING EARLIER REVISION DATES

REVISION DATES: ~~8-5-22~~ ~~8-9-22~~ 9-2-22

SHEET X OF X

| Dist | COUNTY | ROUTE | POST MILES TOTAL PROJECT | SHEET No. | TOTAL SHEETS |
|---|---|---|---|---|---|
| | | | | | |

REGISTERED CIVIL ENGINEER X DATE

PLANS APPROVAL DATE

REGISTERED PROFESSIONAL ENGINEER X No. X Exp. X CIVIL STATE OF CALIFORNIA

*THE STATE OF CALIFORNIA OR ITS OFFICERS OR AGENTS SHALL NOT BE RESPONSIBLE FOR THE ACCURACY OR COMPLETENESS OF SCANNED COPIES OF THIS PLAN SHEET.*

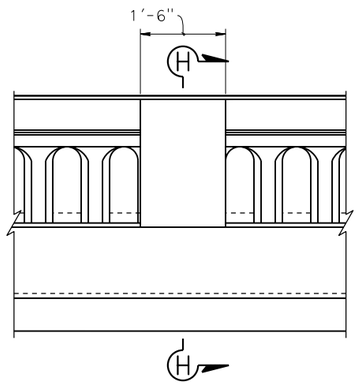


STRONG POST A TYPICAL

3/4" = 1'-0"

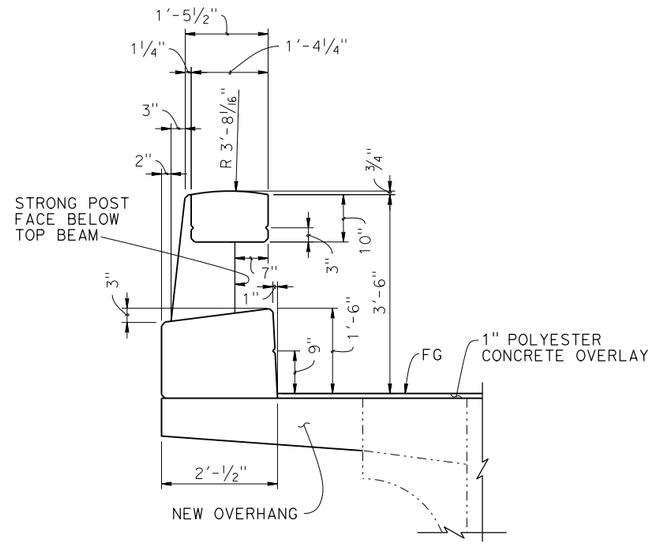


SECTION H-H

NOTE: Strong Post A cross section dimensions shown, Strong Post C similar.

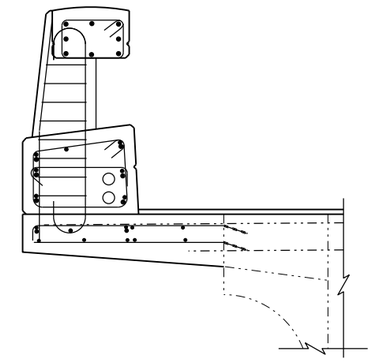

SECTION H-H

NOTE: Strong Post A rebar shown, Strong Post C similar.

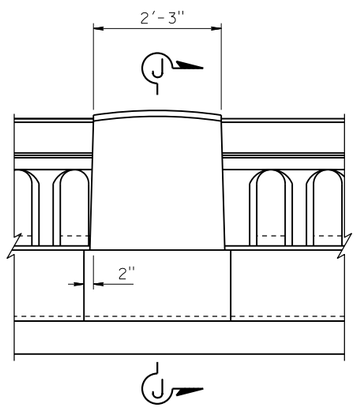


STRONG POST B TYPICAL

3/4" = 1'-0"

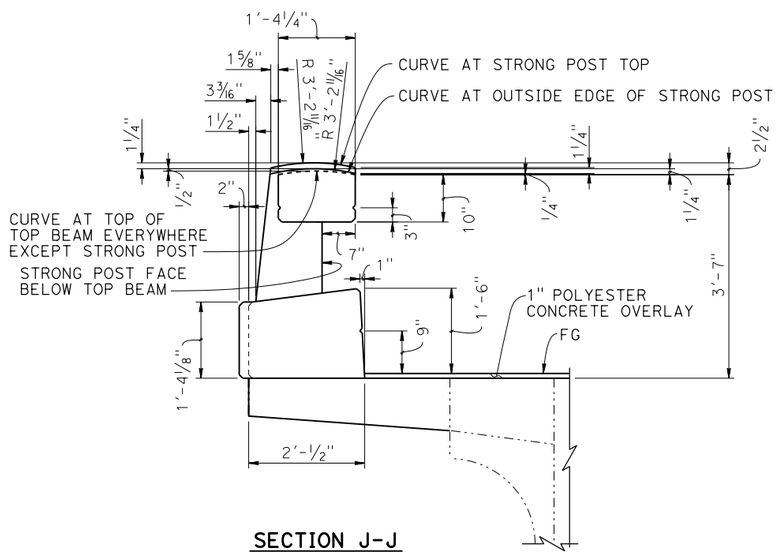


SECTION J-J

NOTE: Strong Post B cross section dimensions shown, Strong Post D similar.

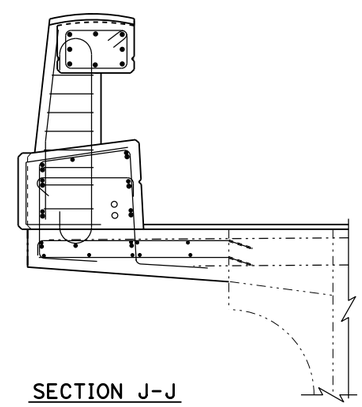

SECTION J-J

NOTE: Strong Post B rebar shown, Strong Post D similar.

| | | | |
|---|---|---|---|
| DESIGN | BY Kimberly Mori | CHECKED X | |
| DETAILS | BY David Elliott | CHECKED X | |
| QUANTITIES | BY X | CHECKED X | |

STATE OF CALIFORNIA DEPARTMENT OF TRANSPORTATION

DIVISION OF ENGINEERING SERVICES OFFICE OF DESIGN AND TECHNICAL SERVICES SPECIAL DESIGN BRANCH B

BRIDGE No. 44-0018

POST MILE 63.0

# GARRAPATA CREEK BRIDGE

## CONCRETE BARRIER TYPE 86H DETAILS No. 8

STRUCTURES DESIGN DETAIL SHEET (ENGLISH) (REVISION 3/10/2021)

DATE PLOTTED => 7-SEP-2022 TIME PLOTTED => 08:32
FILE => 44-0018-c-sp08.dgn USERNAME => s123982

ORIGINAL SCALE IN INCHES FOR REDUCED PLANS 0 1 2 3

UNIT: 3619
PROJECT NUMBER & PHASE: 05160001631

COUNTY/ROUTE: Mon/1
CONTRACT No.: 05-1H8004

DISREGARD PRINTS BEARING EARLIER REVISION DATES

REVISION DATES: ~~8-1-22~~ ~~8-8-22~~ 9-2-22

SHEET X OF X

| Dist | COUNTY | ROUTE | POST MILES TOTAL PROJECT | SHEET No. | TOTAL SHEETS |
|---|---|---|---|---|---|
| | | | | | |

REGISTERED CIVIL ENGINEER X DATE

PLANS APPROVAL DATE

REGISTERED PROFESSIONAL ENGINEER X No. X Exp. X CIVIL STATE OF CALIFORNIA

*THE STATE OF CALIFORNIA OR ITS OFFICERS OR AGENTS SHALL NOT BE RESPONSIBLE FOR THE ACCURACY OR COMPLETENESS OF SCANNED COPIES OF THIS PLAN SHEET.*

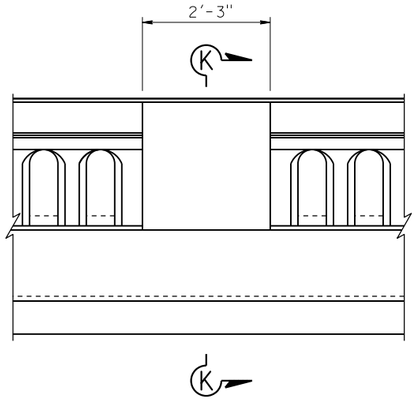


## STRONG POST C TYPICAL

3/4" = 1'-0"

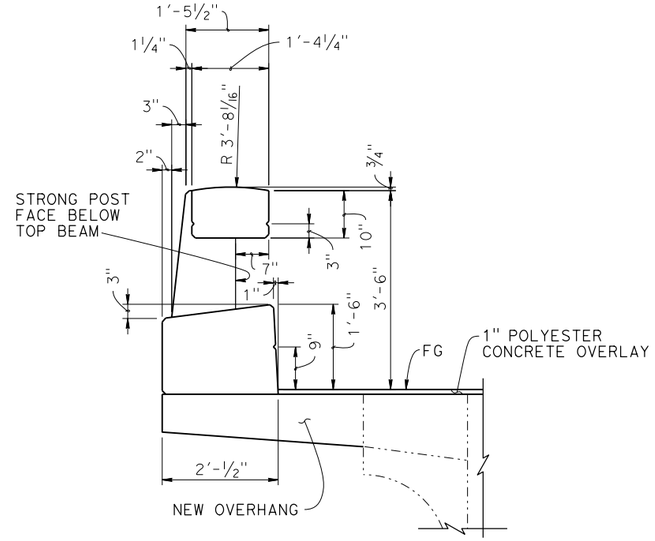


## SECTION K-K

NOTE: Strong Post C cross section dimensions shown, Strong Post A similar.

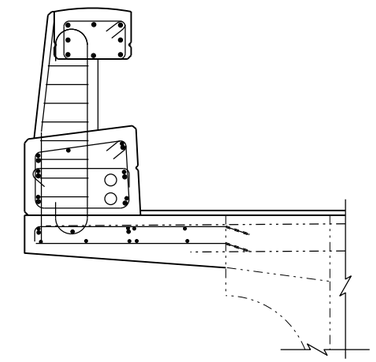

## SECTION K-K

NOTE: Strong Post C rebar shown, Strong Post A similar.

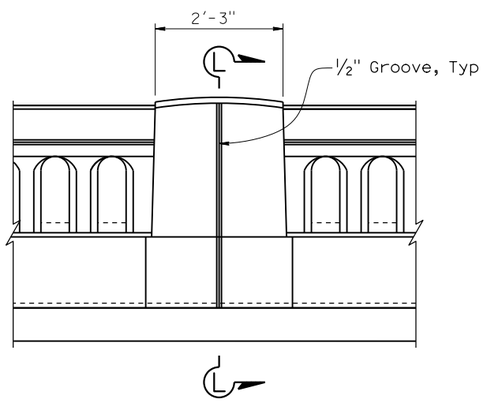


## STRONG POST D TYPICAL

3/4" = 1'-0"

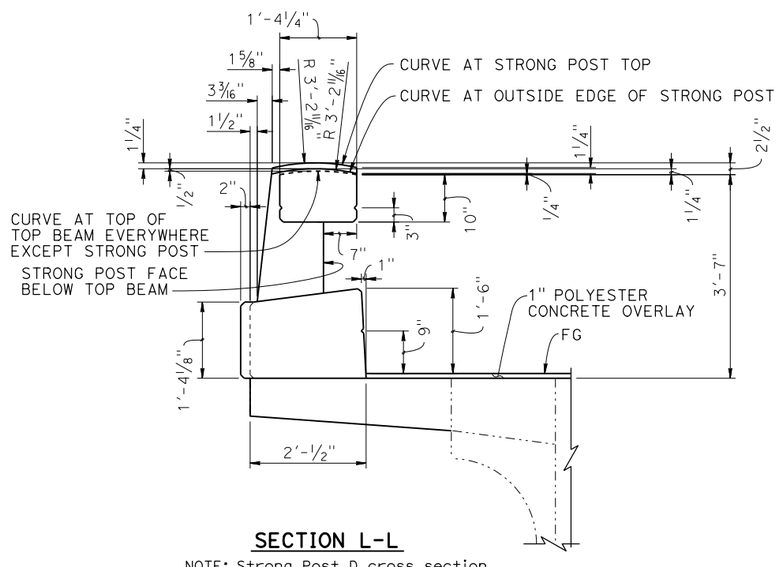


## SECTION L-L

NOTE: Strong Post D cross section dimensions shown, Strong Post B similar.

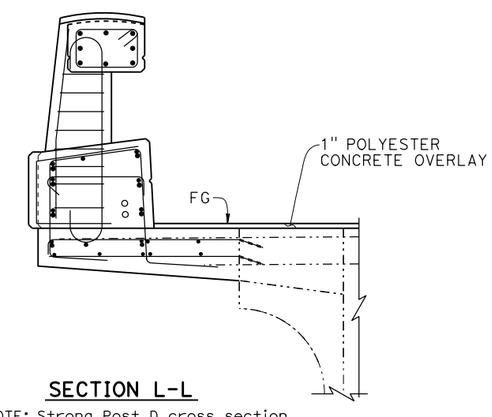


## SECTION L-L

NOTE: Strong Post D cross section reinforcement shown, Strong Post B similar.

| | | | |
|---|---|---|---|
| DESIGN | BY Kimberly Mori | CHECKED X | |
| DETAILS | BY David Elliott | CHECKED X | |
| QUANTITIES | BY X | CHECKED X | |

STATE OF CALIFORNIA
DEPARTMENT OF TRANSPORTATION

DIVISION OF ENGINEERING SERVICES
OFFICE OF DESIGN AND TECHNICAL SERVICES
SPECIAL DESIGN BRANCH B

BRIDGE No. 44-0018
POST MILE 63.0

# GARRAPATA CREEK BRIDGE

## CONCRETE BARRIER TYPE 86H DETAILS No. 9

STRUCTURES DESIGN DETAIL SHEET (ENGLISH) (REVISION 3/10/2021)

DATE PLOTTED => 7-SEP-2022 TIME PLOTTED => 08:32
FILE => 44-0018-c-sp09.dgn USERNAME => s123982

ORIGINAL SCALE IN INCHES FOR REDUCED PLANS 0 1 2 3

UNIT: 3619
PROJECT NUMBER & PHASE: 05160001631

COUNTY/ROUTE: Mon/1
CONTRACT No.: 05-1H8004

DISREGARD PRINTS BEARING EARLIER REVISION DATES

REVISION DATES: 9-7-22 ---- ----

SHEET X OF X

| Dist | COUNTY | ROUTE | POST MILES TOTAL PROJECT | SHEET No. | TOTAL SHEETS |
|---|---|---|---|---|---|
| | | | | | |

REGISTERED CIVIL ENGINEER X DATE

PLANS APPROVAL DATE

REGISTERED PROFESSIONAL ENGINEER X No. X Exp. X CIVIL STATE OF CALIFORNIA

*THE STATE OF CALIFORNIA OR ITS OFFICERS OR AGENTS SHALL NOT BE RESPONSIBLE FOR THE ACCURACY OR COMPLETENESS OF SCANNED COPIES OF THIS PLAN SHEET.*

NOTE:

1. Adjust spacing of #4 hoops at post location as necessary to avoid locations of the drill and bond threaded rods attaching the tubular bicycle railing to the top of the top concrete beam. See the "TUBULAR BICYCLE RAILING DETAIL" on the "CONCRETE BARRIER TYPE 86H DETAILS No. 5" sheet.

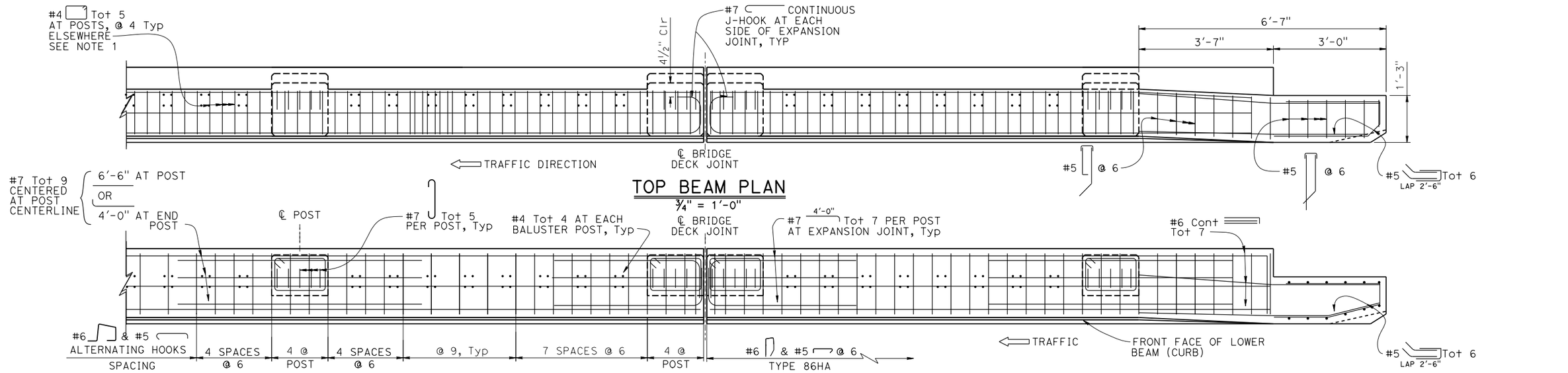


| | BY | CHECKED |
|---|---|---|
| DESIGN | Kimberly Mori | X |
| DETAILS | David Elliott | X |
| QUANTITIES | X | X |

STATE OF CALIFORNIA
DEPARTMENT OF TRANSPORTATION

DIVISION OF ENGINEERING SERVICES
OFFICE OF DESIGN AND TECHNICAL SERVICES
SPECIAL DESIGN BRANCH B

BRIDGE No. 44-0018
POST MILE 63.0

# GARRAPATA CREEK BRIDGE

## CONCRETE BARRIER TYPE 86H DETAILS No. 10

STRUCTURES DESIGN DETAIL SHEET (ENGLISH) (REVISION 3/10/2021)

DATE PLOTTED => 7-SEP-2022 TIME PLOTTED => 08:32
FILE => 44-0018-c-sp10.dgn USERNAME => s123982

ORIGINAL SCALE IN INCHES FOR REDUCED PLANS 0 1 2 3

UNIT: 3619
PROJECT NUMBER & PHASE: 05160001631

COUNTY/ROUTE: Mon/1
CONTRACT No.: 05-1H8004

DISREGARD PRINTS BEARING EARLIER REVISION DATES

REVISION DATES: 8-5-22

SHEET X OF X

| Dist | COUNTY | ROUTE | POST MILES TOTAL PROJECT | SHEET No. | TOTAL SHEETS |
|---|---|---|---|---|---|
| | | | | | |

REGISTERED CIVIL ENGINEER X DATE

PLANS APPROVAL DATE

REGISTERED PROFESSIONAL ENGINEER X No. X Exp. X CIVIL STATE OF CALIFORNIA

*THE STATE OF CALIFORNIA OR ITS OFFICERS OR AGENTS SHALL NOT BE RESPONSIBLE FOR THE ACCURACY OR COMPLETENESS OF SCANNED COPIES OF THIS PLAN SHEET.*

NOTES:

1. For "SECTION A-A" and " SECTION B-B" location see "CONCRETE BARRIER TYPE 86H No. 1" sheet.
2. For details not shown, see other sheets.

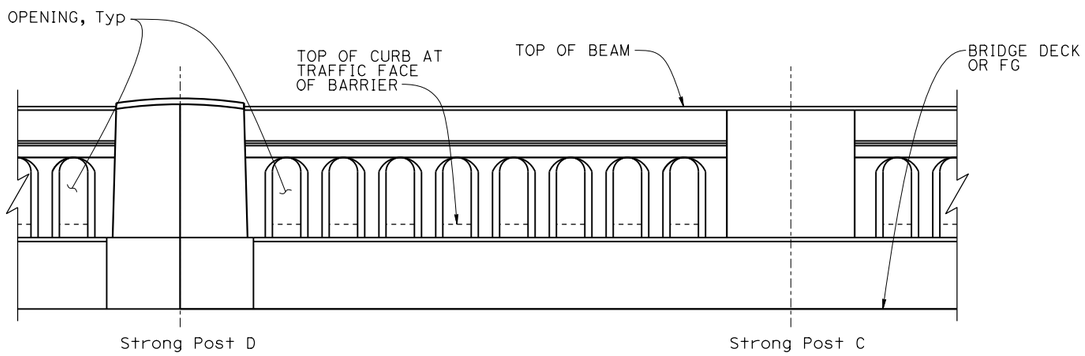


ELEVATION WITH CHAMFERED BALUSTERS

CLEAR OPENINGS & BALUSTERS

3/4"= 1'-0"

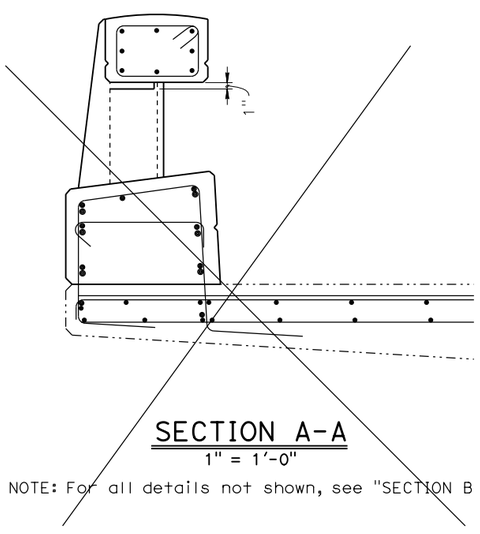


SECTION A-A

1" = 1'-0"

NOTE: For all details not shown, see "SECTION B

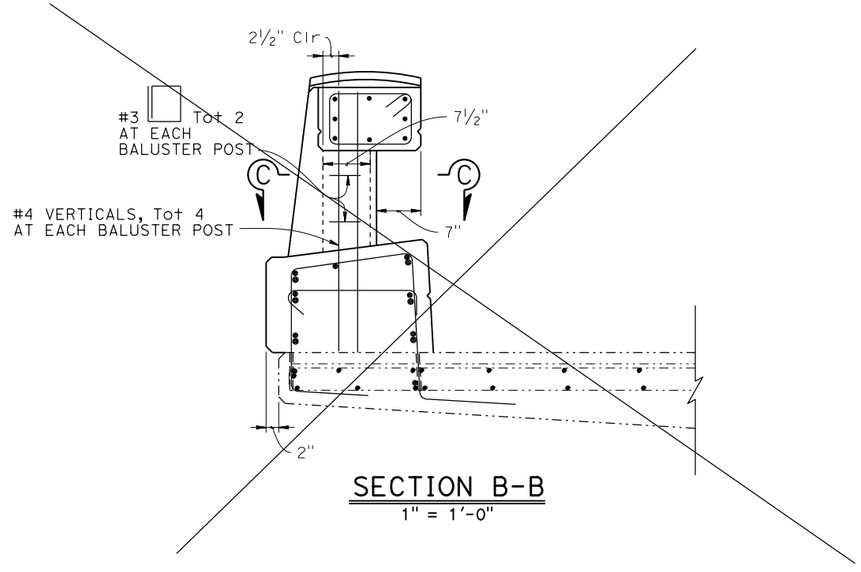


SECTION B-B

1" = 1'-0"

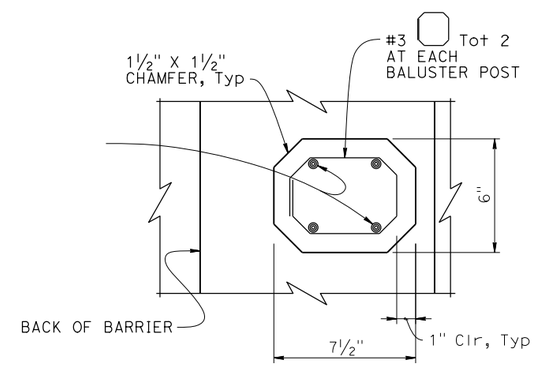


SECTION C-C

3" = 1'-0"

| | | | |
|---|---|---|---|
| DESIGN | BY Kimberly Mori | CHECKED X | |
| DETAILS | BY David Elliott | CHECKED X | |
| QUANTITIES | BY X | CHECKED X | |

STATE OF CALIFORNIA DEPARTMENT OF TRANSPORTATION

DIVISION OF ENGINEERING SERVICES OFFICE OF DESIGN AND TECHNICAL SERVICES SPECIAL DESIGN BRANCH B

BRIDGE No. 44-0018

POST MILE 63.0

# GARRAPATA CREEK BRIDGE

## CONCRETE BARRIER TYPE 86H DETAILS No. 11

STRUCTURES DESIGN DETAIL SHEET (ENGLISH) (REVISION 3/10/2021)

DATE PLOTTED => 7-SEP-2022 TIME PLOTTED => 08:32
FILE => 44-0018-c-sp11.dgn USERNAME => s123982

ORIGINAL SCALE IN INCHES FOR REDUCED PLANS 0 1 2 3

UNIT: 3619
PROJECT NUMBER & PHASE: 05160001631

COUNTY/ROUTE: Mon/1
CONTRACT No.: 05-1H8004

DISREGARD PRINTS BEARING EARLIER REVISION DATES

REVISION DATES: 8-1-22 8-8-22

SHEET X OF X

| Dist | COUNTY | ROUTE | POST MILES TOTAL PROJECT | SHEET No. | TOTAL SHEETS |
|---|---|---|---|---|---|
| 05 | Mon | 1 | 63.0 | 1 | |

INDEX OF PLANS


| SHEET No. | DESCRIPTION |
|---|---|
| 1 | TITLE AND LOCATION MAP |
| 2 | LAYOUT |
| 3 | UTILITY PLAN |
| 4 | CONSTRUCTION AREA SIGNS |
| 5-6 | STAGE CONSTRUCTION |
| 7-12 | TRAFFIC HANDLING PLAN |
| 13 | TRAFFIC HANDLING QUANTITIES |
| 14 | PAVEMENT DELINEATION AND SIGN PLAN |
| 15 | PAVEMENT DELINEATION QUANTITIES |
| 16 | SIGN DETAILS |
| 17 | SIGN QUANTITIES |
| 18 | SUMMARY OF QUANTITIES |
| 19 | EROSION CONTROL LEGEND |
| 20-24 | TEMPORARY SIGNAL SYSTEMS |
| 25-26 | ELECTRICAL DETAILS |
| 27 | ELECTRICAL SYSTEMS QUANTITIES |

STRUCTURE PLANS

| | |
|---|---|
| 28 | GENERAL PLAN |


THE STANDARD PLANS LIST APPLICABLE TO THIS CONTRACT IS INCLUDED IN THE NOTICE TO BIDDERS AND SPECIAL PROVISIONS BOOK.

STATE OF CALIFORNIA

# DEPARTMENT OF TRANSPORTATION

## PROJECT PLANS FOR CONSTRUCTION ON

# STATE HIGHWAY

## IN MONTEREY COUNTY
## ABOUT 11.3 MILES SOUTH OF CARMEL
## AT GARRAPATA CREEK BRIDGE

TO BE SUPPLEMENTED BY STANDARD PLANS DATED 2018

## 60% PLANS- NOT FOR CONSTRUCTION

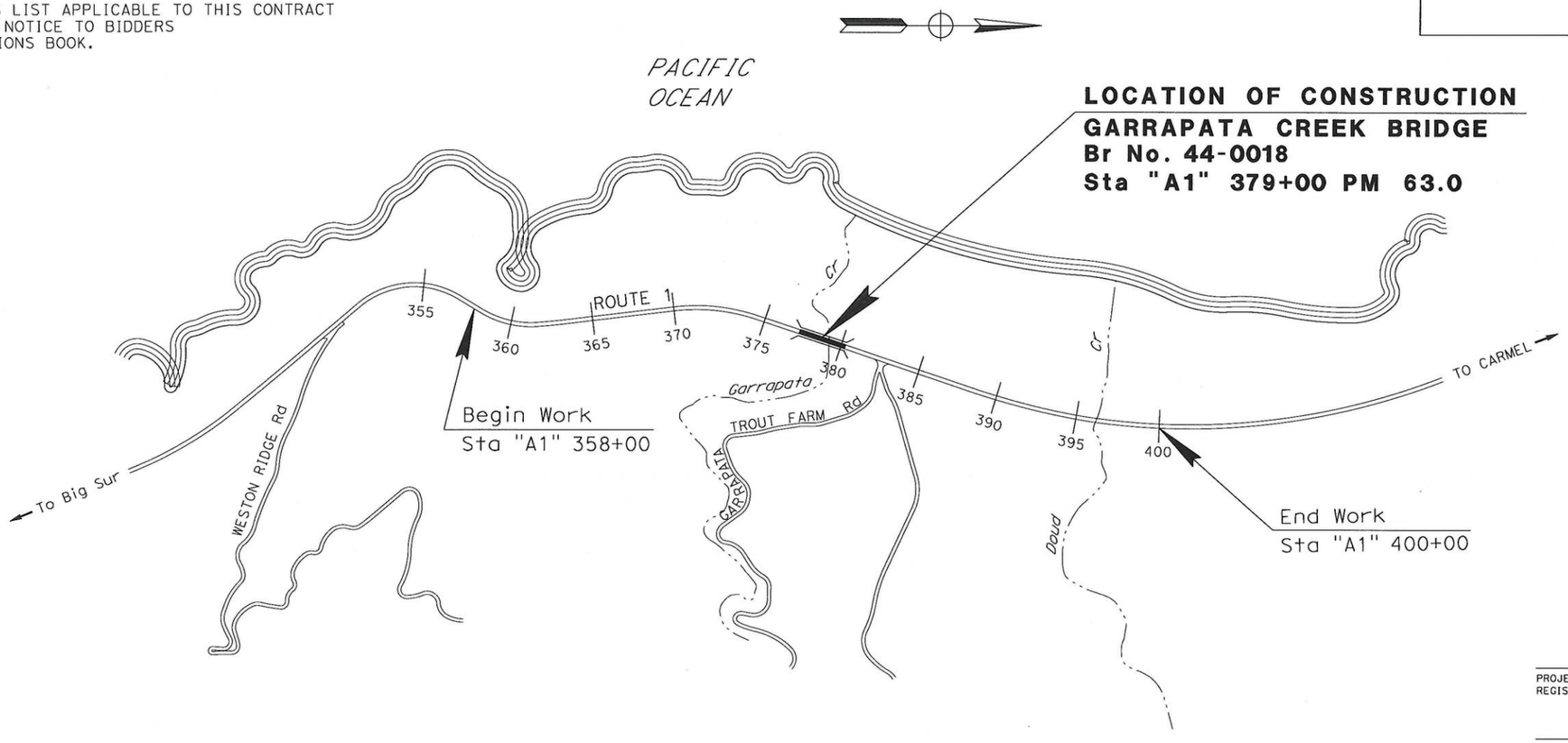


NO SCALE

PROJECT ENGINEER DATE
REGISTERED CIVIL ENGINEER

PLANS APPROVAL DATE

*THE STATE OF CALIFORNIA OR ITS OFFICERS OR AGENTS SHALL NOT BE RESPONSIBLE FOR THE ACCURACY OR COMPLETENESS OF SCANNED COPIES OF THIS PLAN SHEET.*

REGISTERED PROFESSIONAL ENGINEER No. Exp. CIVIL STATE OF CALIFORNIA

THE CONTRACTOR SHALL POSSESS THE CLASS (OR CLASSES) OF LICENSE AS SPECIFIED IN THE "NOTICE TO BIDDERS."

| CONTRACT No. | 05-1H8004 |
|---|---|
| PROJECT ID | 0516000163 |

PROJECT MANAGER CARLA YU

DESIGN MANAGER JOSE HUERTA

LAST REVISION 00-00-00 DATE PLOTTED => $DATE TIME PLOTTED => $TIME

| Dist | COUNTY | ROUTE | POST MILES TOTAL PROJECT | SHEET No. | TOTAL SHEETS |
|---|---|---|---|---|---|
| 05 | Mon | 1 | 63.0 | 2 | |

REGISTERED CIVIL ENGINEER DATE

PLANS APPROVAL DATE

REGISTERED PROFESSIONAL ENGINEER No. Exp. CIVIL STATE OF CALIFORNIA

*THE STATE OF CALIFORNIA OR ITS OFFICERS OR AGENTS SHALL NOT BE RESPONSIBLE FOR THE ACCURACY OR COMPLETENESS OF SCANNED COPIES OF THIS PLAN SHEET.*

NOTE:

1. FOR ACCURATE RIGHT OF WAY DATA, CONTACT RIGHT OF WAY ENGINEERING AT THE DISTRICT OFFICE.

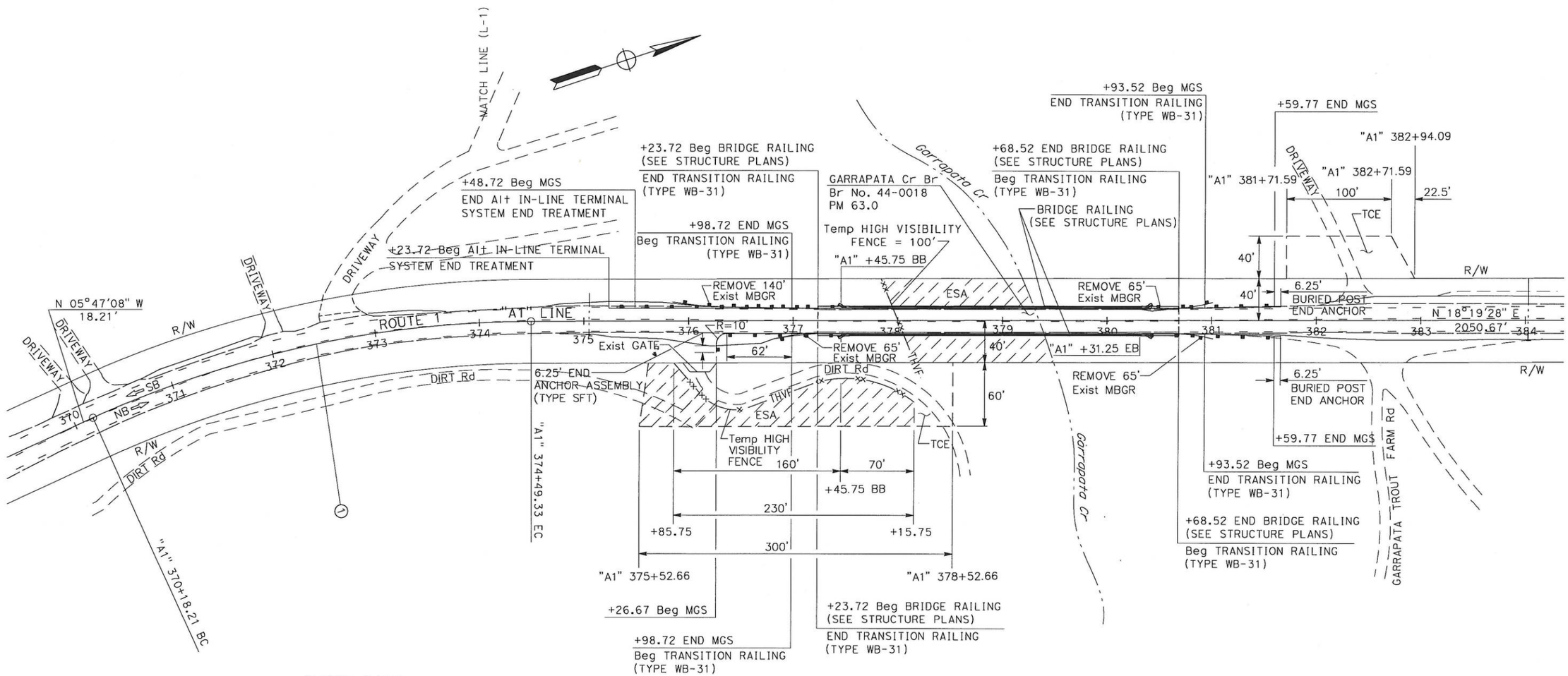


CURVE DATA

| No. ⊛ | R | Δ | T | L |
|---|---|---|---|---|
| 1 | 1024.54 | 24°06'36" | 218.80 | 431.12 |

**LAYOUT**

SCALE 1" = 50'

**L-1**

| | | | |
|---|---|---|---|
| | | HUY HA | 00-00-00 |
| | | REVISED BY | DATE REVISED |
| CALCULATED-DESIGNED BY | HUY HA | | |
| CHECKED BY | JOSE HUERTA | | |
| FUNCTIONAL SUPERVISOR | JOSE HUERTA | | |

STATE OF CALIFORNIA - DEPARTMENT OF TRANSPORTATION

Caltrans

DESIGN

LAST REVISION 00-00-00 | DATE PLOTTED => $DATE | TIME PLOTTED => $TIME

| Dist | COUNTY | ROUTE | POST MILES TOTAL PROJECT | SHEET No. | TOTAL SHEETS |
|---|---|---|---|---|---|
| 05 | Mon | 1 | 63.0 | 3 | |

REGISTERED CIVIL ENGINEER DATE

PLANS APPROVAL DATE

REGISTERED PROFESSIONAL ENGINEER No. Exp. CIVIL STATE OF CALIFORNIA

*THE STATE OF CALIFORNIA OR ITS OFFICERS OR AGENTS SHALL NOT BE RESPONSIBLE FOR THE ACCURACY OR COMPLETENESS OF SCANNED COPIES OF THIS PLAN SHEET.*

NOTES:

1. FOR ACCURATE RIGHT OF WAY DATA, CONTACT RIGHT OF WAY ENGINEERING AT THE DISTRICT OFFICE.
2. UTILITIES SHOWN ON THIS PLAN ARE EXISTING AND ARE FOR INFORMATION PURPOSES ONLY.
3. UTILITIES OWNERSHIP ON THIS PROJECT AS SHOWN:
   ELECTRICAL - PACIFIC GAS & ELECTRIC PG&E
   TELEPHONE - AMERICAN TELEPHONE & TELEGRAPH AT&T

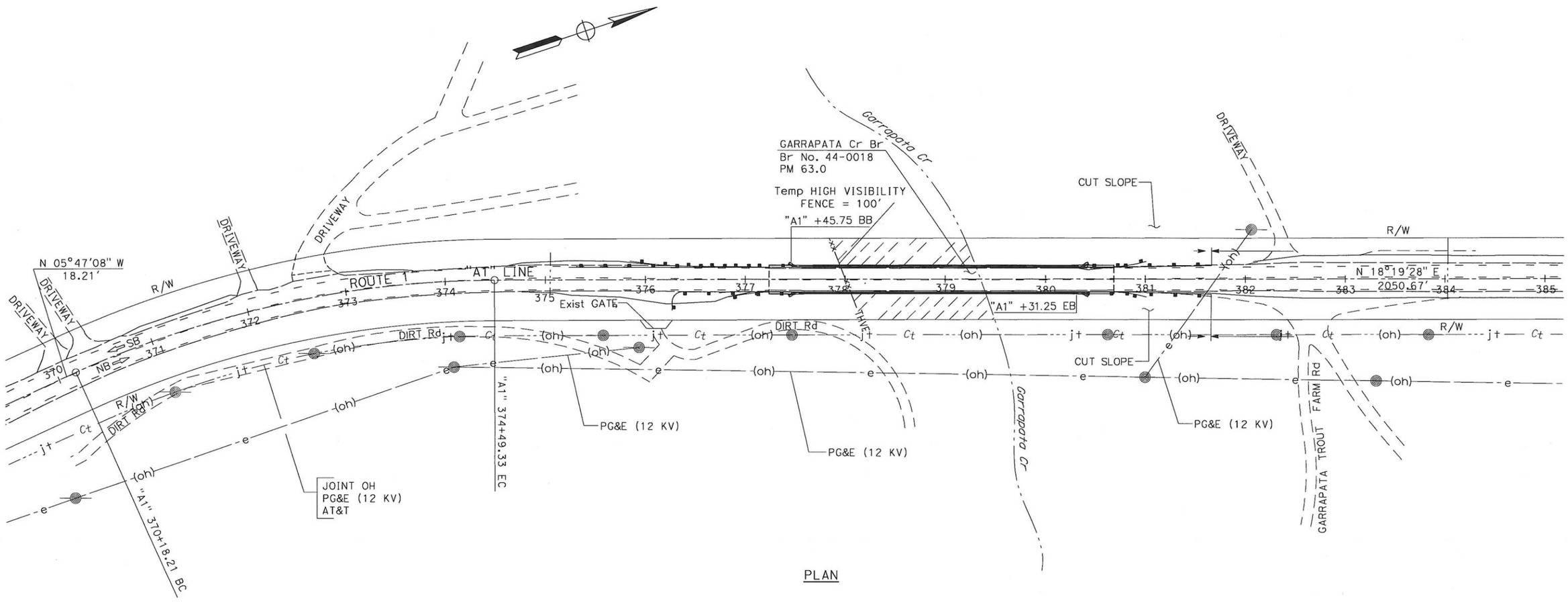


PLAN

## GARRAPATA CREEK BRIDGE AT PM 63.0

*THIS PLAN TO BE USED FOR UTILITY INFORMATION ONLY*

## UTILITY PLAN

SCALE 1" = 50' **U-1**

| | |
|---|---|
| HUY HA | REVISED BY |
| 00-00-00 | DATE REVISED |
| HUY HA | CALCULATED-DESIGNED BY |
| JOSE HUERTA | CHECKED BY |
| JOSE HUERTA | FUNCTIONAL SUPERVISOR |

STATE OF CALIFORNIA - DEPARTMENT OF TRANSPORTATION

Caltrans® **DESIGN**

LAST REVISION 00-00-00 | DATE PLOTTED => $DATE | TIME PLOTTED => $TIME

BORDER LAST REVISED 7/2/2010 | USERNAME => $USER | RELATIVE BORDER SCALE 0 1 2 3 | UNIT 1457 | PROJECT NUMBER & PHASE 05160001631

| Dist | COUNTY | ROUTE | POST MILES TOTAL PROJECT | SHEET No. | TOTAL SHEETS |
|---|---|---|---|---|---|
| 05 | Mon | 1 | 63.00 | 4 | |

REGISTERED CIVIL ENGINEER DATE

PLANS APPROVAL DATE

REGISTERED PROFESSIONAL ENGINEER QUAY F. CHESTER No. 92096 Exp. 03/31/23 CIVIL STATE OF CALIFORNIA

*THE STATE OF CALIFORNIA OR ITS OFFICERS OR AGENTS SHALL NOT BE RESPONSIBLE FOR THE ACCURACY OR COMPLETENESS OF SCANNED COPIES OF THIS PLAN SHEET.*

## STATIONARY MOUNTED CONSTRUCTION AREA SIGNS

| SIGN No. (X) | SIGN DESIGNATION | SIGN MESSAGE | PANEL SIZE | No. OF POSTS AND POST SIZE | No. OF SIGNS |
|---|---|---|---|---|---|
| 1 | W20-1 | ROAD WORK AHEAD | 48"x48" | 1-6"x6" | 2 |
| 2 | G20-2 | END ROAD WORK | 36"x18" | 1-4"x4" | 2 |
| 3 | C47B (CA) | CONSTRUCTION PROJECT FUNDING IDENTIFICATION SIGN | 48"x30" | 1-4"x6" | 2 |

NOTE: SIGN LOCATIONS ARE APPROXIMATE. EXACT LOCATIONS TO BE DETERMINED BY THE ENGINEER.

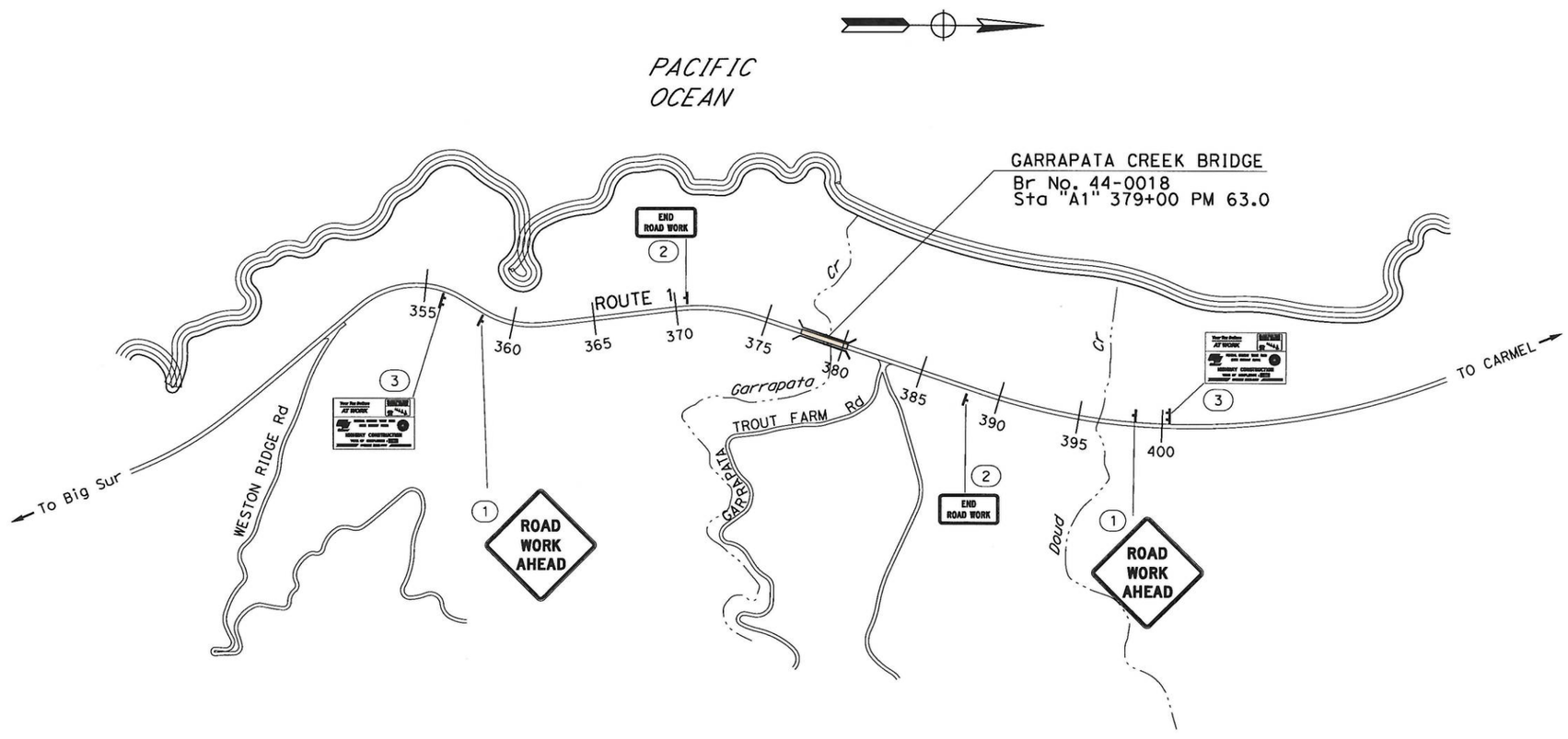


## CONSTRUCTION AREA SIGNS

*APPROVED FOR CONSTRUCTION AREA SIGN WORK ONLY*

NO SCALE

**CS-1**

STATE OF CALIFORNIA - DEPARTMENT OF TRANSPORTATION

Caltrans

**TRAFFIC DESIGN**

FUNCTIONAL SUPERVISOR: MOHAMMED OATAMI

CALCULATED-DESIGNED BY: QUAY CHESTER

CHECKED BY: FAWZI YAGHMOUR

REVISED BY | DATE REVISED

LAST REVISION 00-00-00 | DATE PLOTTED => 1/24/2022 | TIME PLOTTED => 9:56:20 AM

BORDER LAST REVISED 7/2/2010 | USERNAME => | DGN FILE => ...\0516000163\a001.dgn | RELATIVE BORDER SCALE IS IN INCHES 0 1 2 3 | UNIT 4651 | PROJECT NUMBER & PHASE 0516000163

| Dist | COUNTY | ROUTE | POST MILES TOTAL PROJECT | SHEET No. | TOTAL SHEETS |
|---|---|---|---|---|---|
| 05 | Mon | 1 | 63.0 | 5 | |

REGISTERED CIVIL ENGINEER DATE

PLANS APPROVAL DATE

*THE STATE OF CALIFORNIA OR ITS OFFICERS OR AGENTS SHALL NOT BE RESPONSIBLE FOR THE ACCURACY OR COMPLETENESS OF SCANNED COPIES OF THIS PLAN SHEET.*

REGISTERED PROFESSIONAL ENGINEER No. Exp. CIVIL STATE OF CALIFORNIA

NOTES:

1. FOR ACCURATE RIGHT OF WAY DATA, CONTACT RIGHT OF WAY ENGINEERING AT THE DISTRICT OFFICE.
2. SEE TRAFFIC HANDLING PLAN FOR THE LENGTH OF K-RAIL.
3. SEE TRAFFIC LAYOUT PLAN FOR THE LENGTH OF TEMPORARY HIGH VISIBILITY FENCE AND AREA OF TEMPORARY CONSTRUCTION EASEMENT.

LEGEND:

CONSTRUCT THIS STAGE

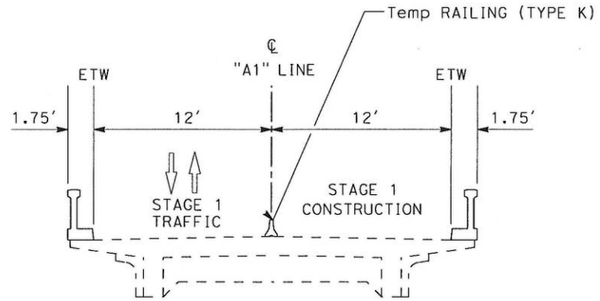


SECTION A-A

DESIGN DESIGNATION (ROUTE 1)

| | | | |
|---|---|---|---|
| ADT (2022) | 5,572 | D | 90% |
| ADT (2042) | 7,144 | T | 14% |
| DHV | 820 | V | 65 mph |

PAVEMENT CLIMATE REGION

CENTRAL COAST

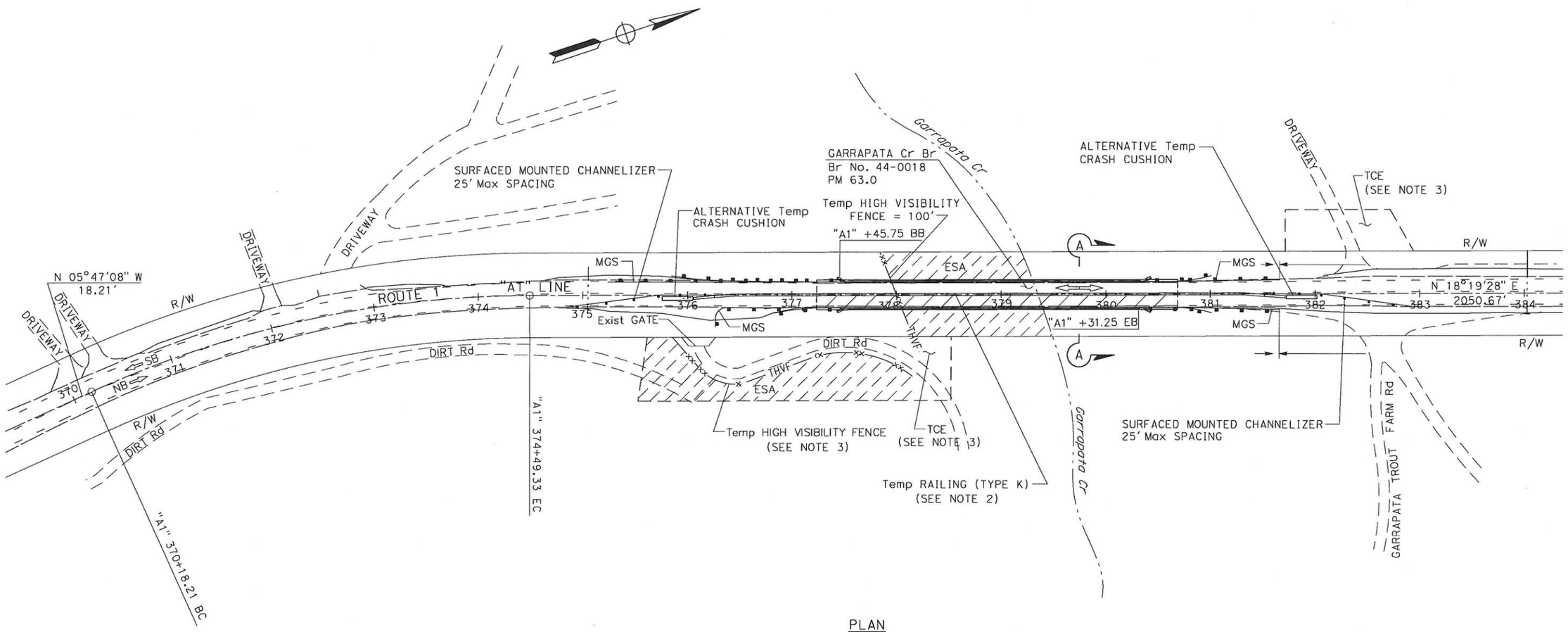


PLAN

**GARRAPATA CREEK BRIDGE AT PM 63.0**

(STAGE 1)

*APPROVED FOR STAGE CONSTRUCTION WORK ONLY*

**STAGE CONSTRUCTION PLAN**

**(STAGE 1)**

SCALE 1" = 50'

**SC-1**

| REVISED BY | DATE REVISED |
|---|---|
| HUY HA | 00-00-00 |

CALCULATED-DESIGNED BY: HUY HA
CHECKED BY: JOSE HUERTA

FUNCTIONAL SUPERVISOR: JOSE HUERTA

STATE OF CALIFORNIA - DEPARTMENT OF TRANSPORTATION

Caltrans

**DESIGN**

LAST REVISION 00-00-00 | DATE PLOTTED => $DATE | TIME PLOTTED => $TIME

| Dist | COUNTY | ROUTE | POST MILES TOTAL PROJECT | SHEET No. | TOTAL SHEETS |
|---|---|---|---|---|---|
| 05 | Mon | 1 | 63.0 | 6 | |

REGISTERED CIVIL ENGINEER DATE

PLANS APPROVAL DATE

REGISTERED PROFESSIONAL ENGINEER No. Exp. CIVIL STATE OF CALIFORNIA

*THE STATE OF CALIFORNIA OR ITS OFFICERS OR AGENTS SHALL NOT BE RESPONSIBLE FOR THE ACCURACY OR COMPLETENESS OF SCANNED COPIES OF THIS PLAN SHEET.*

NOTES:

1. FOR ACCURATE RIGHT OF WAY DATA, CONTACT RIGHT OF WAY ENGINEERING AT THE DISTRICT OFFICE.
2. SEE TRAFFIC HANDLING PLAN FOR THE LENGTH OF K-RAIL.
3. SEE TRAFFIC LAYOUT PLAN FOR THE LENGTH OF TEMPORARY HIGH VISIBILITY FENCE AND AREA OF TEMPORARY CONSTRUCTION EASEMENT.

LEGEND:

CONSTRUCT THIS STAGE

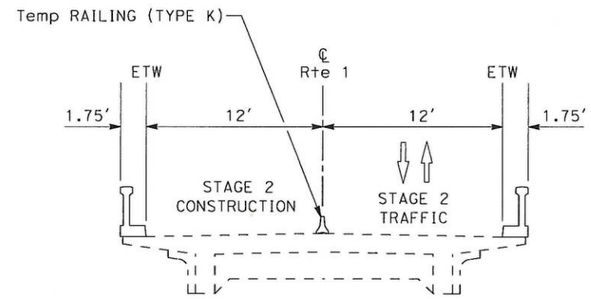


SECTION A-A

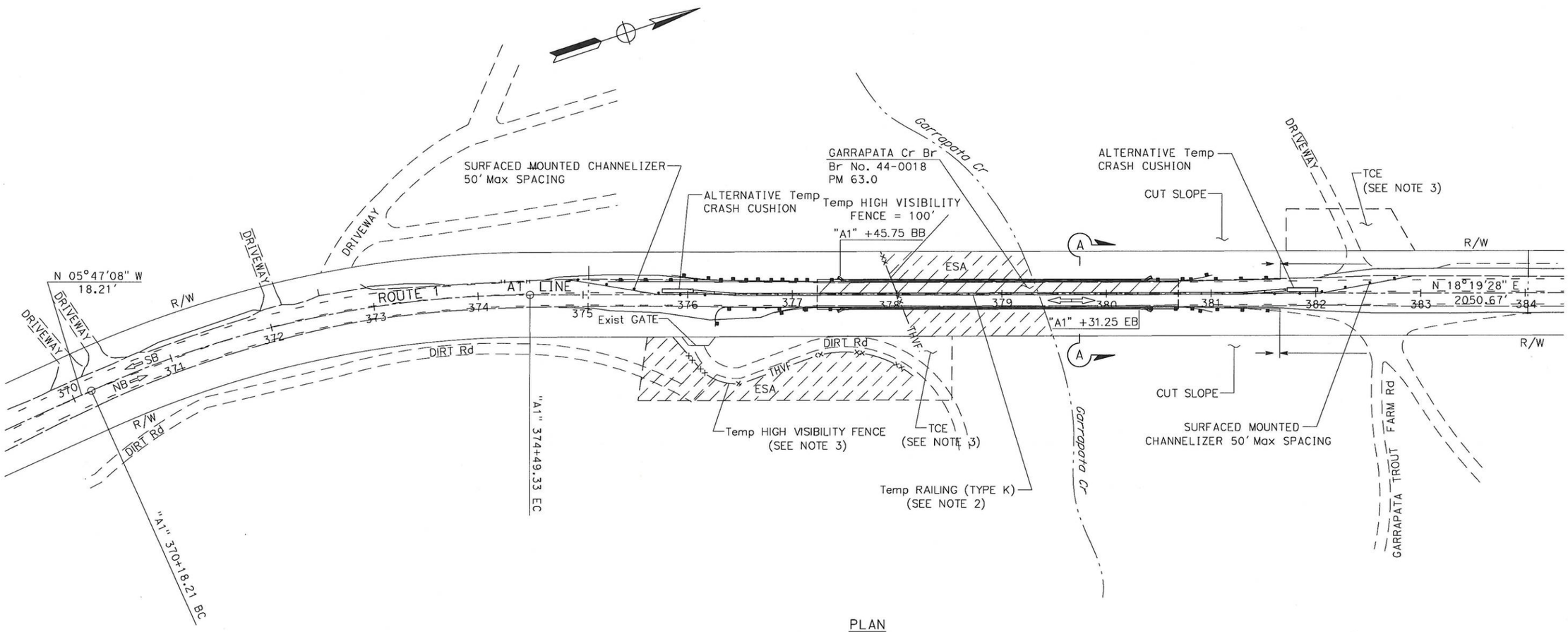


PLAN

## GARRAPATA CREEK BRIDGE AT PM 63.0

(STAGE 2)

*APPROVED FOR STAGE CONSTRUCTION WORK ONLY*

## STAGE CONSTRUCTION PLAN

**(STAGE 2)**

SCALE 1" = 50'

**SC-2**

| REVISED BY | DATE REVISED |
|---|---|
| HUY HA | 00-00-00 |

| CALCULATED-DESIGNED BY | CHECKED BY |
|---|---|
| HUY HA | JOSE HUERTA |

FUNCTIONAL SUPERVISOR: JOSE HUERTA

STATE OF CALIFORNIA - DEPARTMENT OF TRANSPORTATION

Caltrans

**DESIGN**

LAST REVISION 00-00-00 | DATE PLOTTED => $DATE | TIME PLOTTED => $TIME

| Dist | COUNTY | ROUTE | POST MILES TOTAL PROJECT | SHEET No. | TOTAL SHEETS |
|---|---|---|---|---|---|
| 05 | Mon | 1 | 63.00 | 7 | |

REGISTERED CIVIL ENGINEER DATE

PLANS APPROVAL DATE

REGISTERED PROFESSIONAL ENGINEER QUAY F. CHESTER No. 92096 Exp. 03/31/23 CIVIL STATE OF CALIFORNIA

*THE STATE OF CALIFORNIA OR ITS OFFICERS OR AGENTS SHALL NOT BE RESPONSIBLE FOR THE ACCURACY OR COMPLETENESS OF SCANNED COPIES OF THIS PLAN SHEET.*

## NOTES:

1. FOR ACCURATE RIGHT OF WAY DATA, CONTACT RIGHT OF WAY ENGINEERING AT THE DISTRICT OFFICE.
2. EXACT SIGN LOCATIONS TO BE DETERMINED BY THE ENGINEER.
3. ADDITIONAL SIGNS MAY BE INSTALLED ON THE MAINLINE, AND OTHER LOCATIONS, AS DETERMINED BY THE ENGINEER.
4. FOR ADDITIONAL CONSTRUCTION AREA SIGNS, REFER TO CONSTRUCTION AREA SIGN PLAN.

## ABBREVIATIONS:

Rem - REMOVE

## LEGEND:

| | |
|---|---|
| CONSTRUCT THIS STAGE | CHANNELIZER (SURFACE MOUNTED) |
| | Alt Temp CRASH CUSHION |
| | TEMPORARY RAILING (TYPE K) |
| | S= SPACING |
| | * KEEP FROM PREVIOUS STAGE OR PHASE |
| | ROADSIDE SIGN - ATTACHED TO TEMPORARY SIGNAL OR POLE |

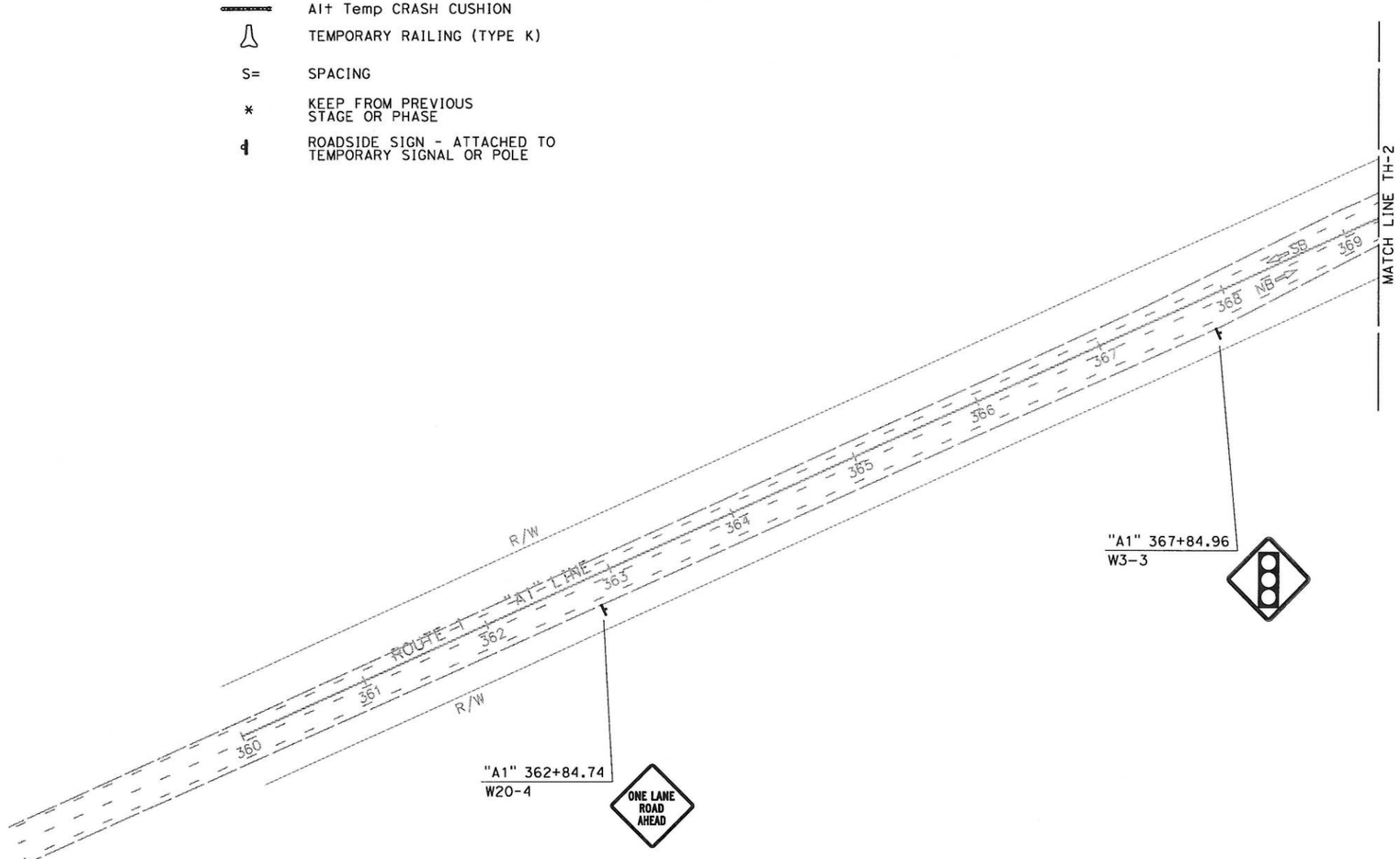


*APPROVED FOR TRAFFIC HANDLING WORK ONLY*

# TRAFFIC HANDLING PLAN
## STAGE 1
SCALE: 1" = 50'

**TH-1**

STATE OF CALIFORNIA - DEPARTMENT OF TRANSPORTATION
Caltrans
TRAFFIC DESIGN

FUNCTIONAL SUPERVISOR: MOHAMMED QATAMI
CALCULATED-DESIGNED BY: QUAY CHESTER
CHECKED BY: FAWZI YAGHMOUR
REVISED BY
DATE REVISED

LAST REVISION 00-00-00
DATE PLOTTED => 1/24/2022
TIME PLOTTED => 9:56:21 AM

| Dist | COUNTY | ROUTE | POST MILES TOTAL PROJECT | SHEET No. | TOTAL SHEETS |
|---|---|---|---|---|---|
| 05 | Mon | 1 | 63.00 | 8 | |

REGISTERED CIVIL ENGINEER DATE

PLANS APPROVAL DATE

*THE STATE OF CALIFORNIA OR ITS OFFICERS OR AGENTS SHALL NOT BE RESPONSIBLE FOR THE ACCURACY OR COMPLETENESS OF SCANNED COPIES OF THIS PLAN SHEET.*

REGISTERED PROFESSIONAL ENGINEER QUAY F. CHESTER No. 92096 Exp. 03/31/23 CIVIL STATE OF CALIFORNIA

## NOTES:

1. FOR ACCURATE RIGHT OF WAY DATA, CONTACT RIGHT OF WAY ENGINEERING AT THE DISTRICT OFFICE.

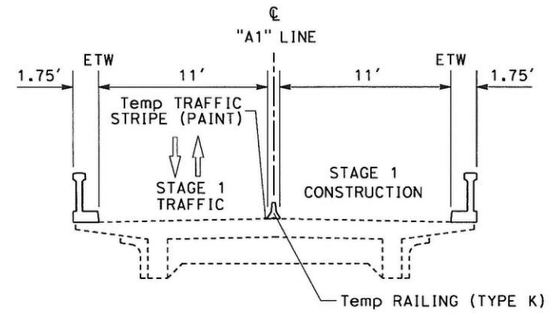


SECTION A-A

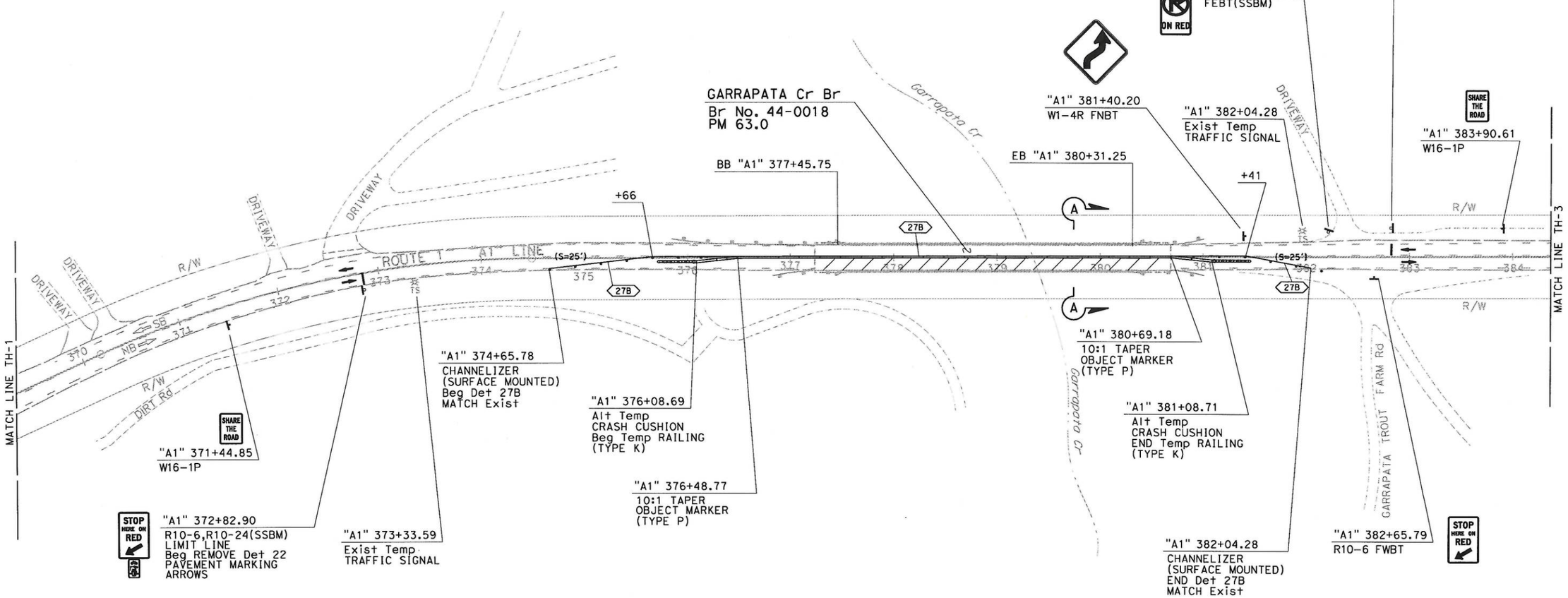


*APPROVED FOR TRAFFIC HANDLING WORK ONLY*

# TRAFFIC HANDLING PLAN

## STAGE 1

SCALE: 1" = 50'

**TH-2**

STATE OF CALIFORNIA - DEPARTMENT OF TRANSPORTATION

Caltrans

**TRAFFIC DESIGN**

FUNCTIONAL SUPERVISOR: MOHAMMED OATAMI

CALCULATED-DESIGNED BY: FAWZI YAGHMOUR

CHECKED BY

REVISED BY

DATE REVISED

LAST REVISION 00-00-00

DATE PLOTTED => 1/24/2022

TIME PLOTTED => 9:56:21 AM

| Dist | COUNTY | ROUTE | POST MILES TOTAL PROJECT | SHEET No. | TOTAL SHEETS |
|---|---|---|---|---|---|
| 05 | Mon | 1 | 63.00 | 9 | |

REGISTERED CIVIL ENGINEER DATE

PLANS APPROVAL DATE

REGISTERED PROFESSIONAL ENGINEER QUAY F. CHESTER No. 92096 Exp. 03/31/23 CIVIL STATE OF CALIFORNIA

*THE STATE OF CALIFORNIA OR ITS OFFICERS OR AGENTS SHALL NOT BE RESPONSIBLE FOR THE ACCURACY OR COMPLETENESS OF SCANNED COPIES OF THIS PLAN SHEET.*

NOTES:

1. FOR ACCURATE RIGHT OF WAY DATA, CONTACT RIGHT OF WAY ENGINEERING AT THE DISTRICT OFFICE.

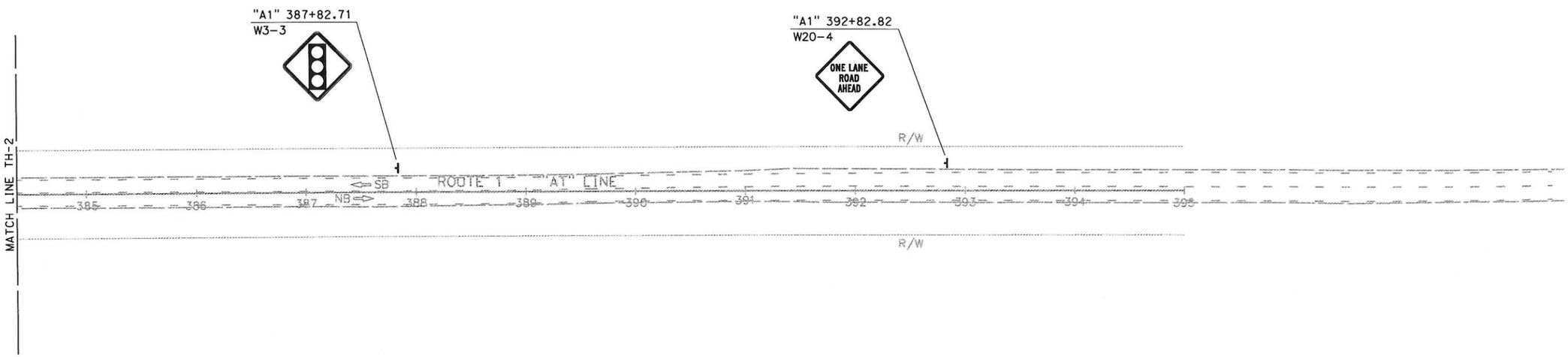


*APPROVED FOR TRAFFIC HANDLING WORK ONLY*

# TRAFFIC HANDLING PLAN

## STAGE 1

SCALE: 1" = 50'

**TH-3**

STATE OF CALIFORNIA - DEPARTMENT OF TRANSPORTATION

Caltrans

TRAFFIC DESIGN

FUNCTIONAL SUPERVISOR: MOHAMMED QATAMI

CALCULATED-DESIGNED BY

CHECKED BY

QUAY CHESTER

FAWZI YAGHMOUR

REVISED BY

DATE REVISED

LAST REVISION 00-00-00

DATE PLOTTED => 1/24/2022

TIME PLOTTED => 9:56:22 AM

| Dist | COUNTY | ROUTE | POST MILES TOTAL PROJECT | SHEET No. | TOTAL SHEETS |
|---|---|---|---|---|---|
| 05 | Mon | 1 | 63.00 | 10 | |

REGISTERED CIVIL ENGINEER DATE

PLANS APPROVAL DATE

REGISTERED PROFESSIONAL ENGINEER QUAY F. CHESTER No. 92096 Exp. 03/31/23 CIVIL STATE OF CALIFORNIA

*THE STATE OF CALIFORNIA OR ITS OFFICERS OR AGENTS SHALL NOT BE RESPONSIBLE FOR THE ACCURACY OR COMPLETENESS OF SCANNED COPIES OF THIS PLAN SHEET.*

NOTES:

1. FOR ACCURATE RIGHT OF WAY DATA, CONTACT RIGHT OF WAY ENGINEERING AT THE DISTRICT OFFICE.

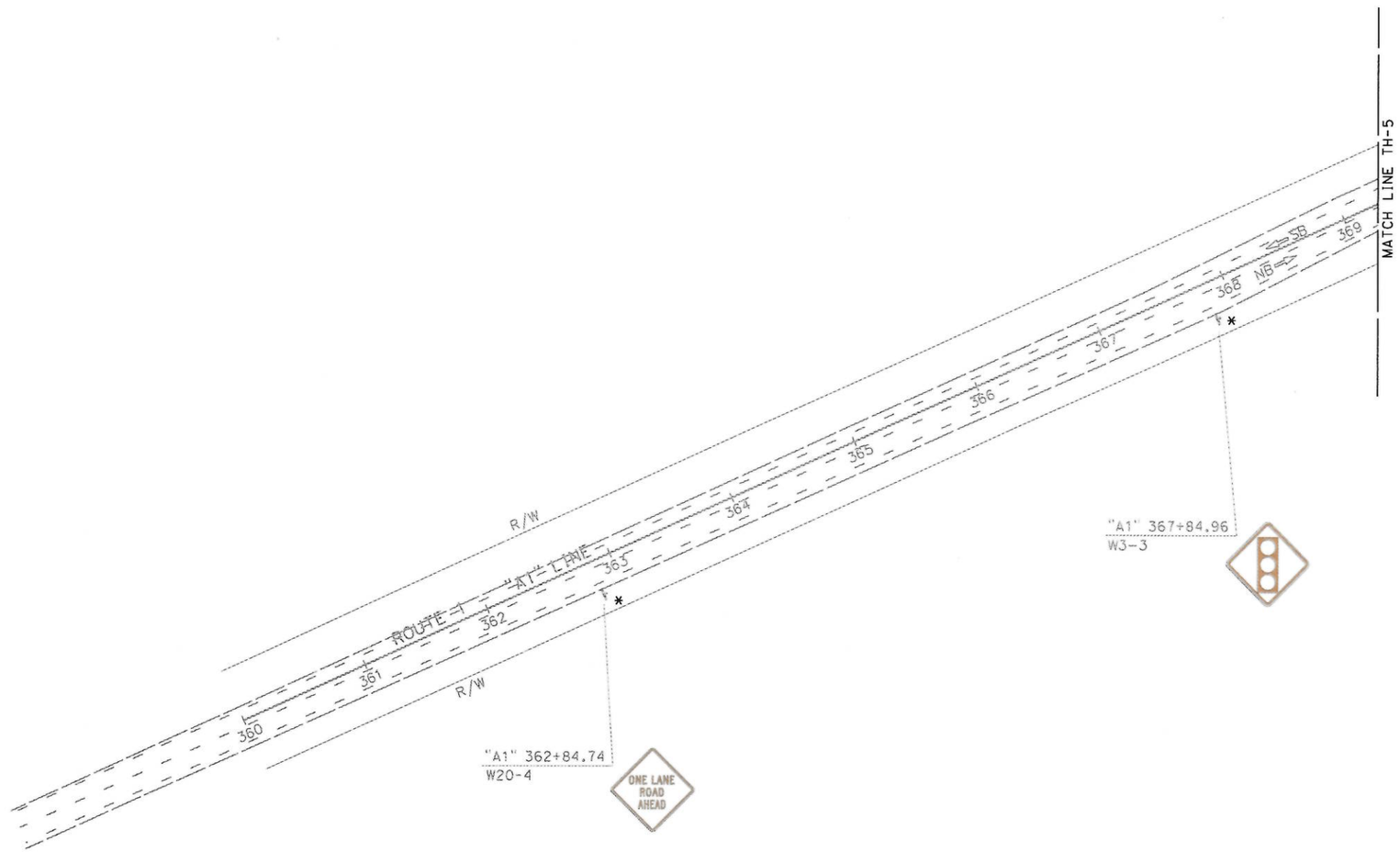


*APPROVED FOR TRAFFIC HANDLING WORK ONLY*

# TRAFFIC HANDLING PLAN

## STAGE 2

SCALE: 1" = 50'

**TH-4**

STATE OF CALIFORNIA - DEPARTMENT OF TRANSPORTATION

Caltrans

TRAFFIC DESIGN

FUNCTIONAL SUPERVISOR: MOHAMMED QATAMI

CALCULATED-DESIGNED BY: QUAY CHESTER

CHECKED BY: FAWZI YAGHMOUR

REVISED BY

DATE REVISED

LAST REVISION 00-00-00

DATE PLOTTED => 1/24/2022

TIME PLOTTED => 9:56:22 AM

| Dist | COUNTY | ROUTE | POST MILES TOTAL PROJECT | SHEET No. | TOTAL SHEETS |
|---|---|---|---|---|---|
| 05 | Mon | 1 | 63.00 | 11 | |

REGISTERED CIVIL ENGINEER DATE

PLANS APPROVAL DATE

*THE STATE OF CALIFORNIA OR ITS OFFICERS OR AGENTS SHALL NOT BE RESPONSIBLE FOR THE ACCURACY OR COMPLETENESS OF SCANNED COPIES OF THIS PLAN SHEET.*

REGISTERED PROFESSIONAL ENGINEER
QUAY F. CHESTER
No. 92096
Exp. 03/31/23
CIVIL
STATE OF CALIFORNIA

## NOTES:

1. FOR ACCURATE RIGHT OF WAY DATA, CONTACT RIGHT OF WAY ENGINEERING AT THE DISTRICT OFFICE.

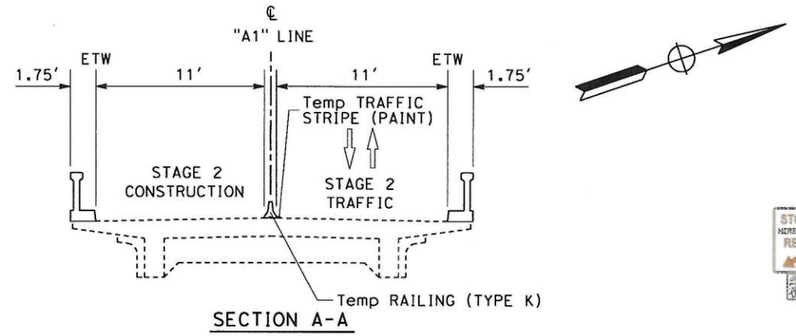


SECTION A-A

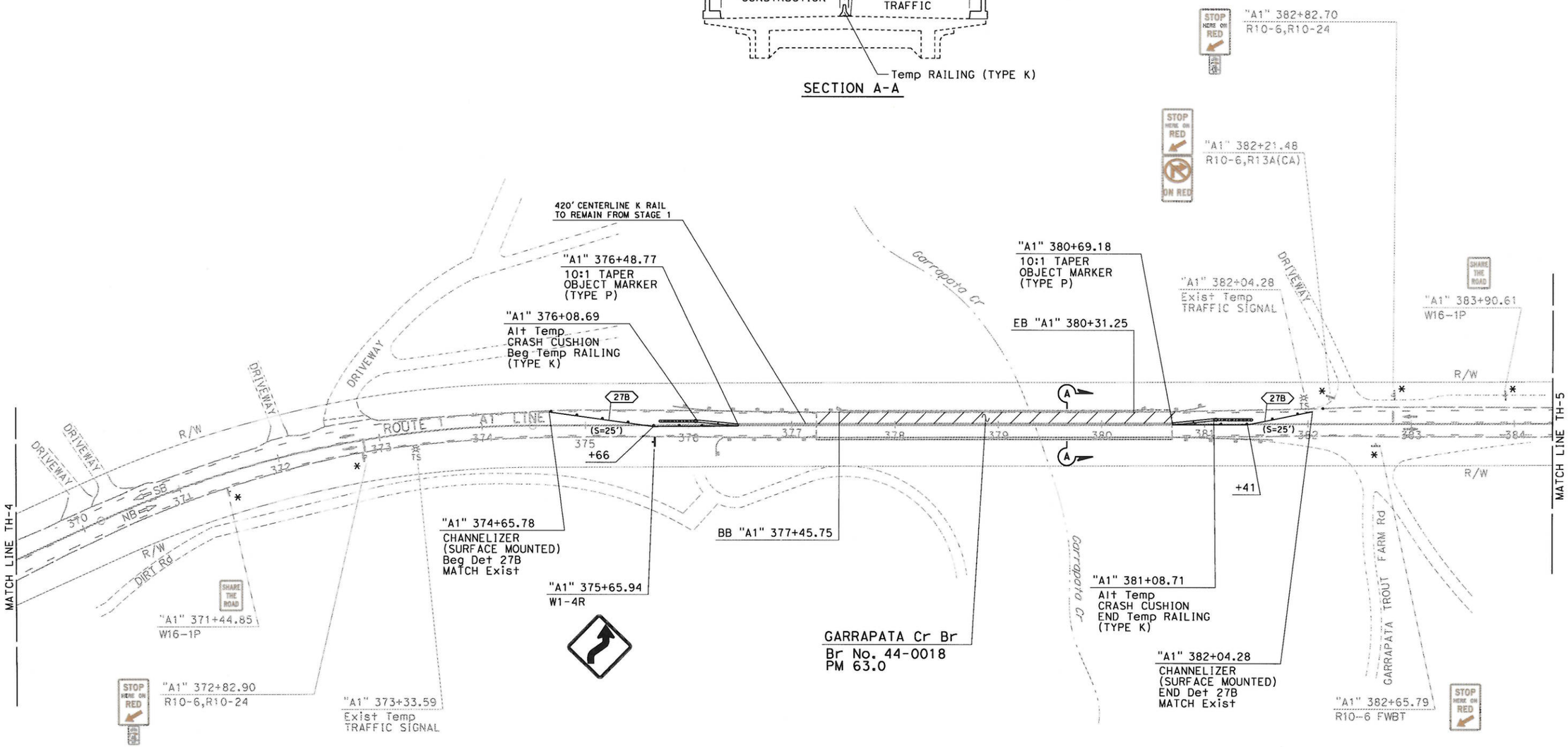


*APPROVED FOR TRAFFIC HANDLING WORK ONLY*

# TRAFFIC HANDLING PLAN

## STAGE 2

SCALE: 1" = 50'

**TH-5**

| REVISED BY | DATE REVISED |
|---|---|
| | |

| CALCULATED-DESIGNED BY | CHECKED BY |
|---|---|
| QUAY CHESTER | FAWZI YAGHMOUR |

FUNCTIONAL SUPERVISOR: MOHAMMED OATAMI

STATE OF CALIFORNIA - DEPARTMENT OF TRANSPORTATION

Caltrans

TRAFFIC DESIGN

LAST REVISION 00-00-00

DATE PLOTTED => 1/24/2022
TIME PLOTTED => 9:56:23 AM

BORDER LAST REVISED 7/2/2010 | USERNAME => DGN FILE => ...\0516000163md005.dgn | RELATIVE BORDER SCALE IS IN INCHES 0 1 2 3 | UNIT 4651 | PROJECT NUMBER & PHASE 0516000163

| Dist | COUNTY | ROUTE | POST MILES TOTAL PROJECT | SHEET No. | TOTAL SHEETS |
|---|---|---|---|---|---|
| 05 | Mon | 1 | 63.00 | 12 | |

REGISTERED CIVIL ENGINEER DATE

PLANS APPROVAL DATE

REGISTERED PROFESSIONAL ENGINEER QUAY F. CHESTER No. 92096 Exp. 03/31/23 CIVIL STATE OF CALIFORNIA

*THE STATE OF CALIFORNIA OR ITS OFFICERS OR AGENTS SHALL NOT BE RESPONSIBLE FOR THE ACCURACY OR COMPLETENESS OF SCANNED COPIES OF THIS PLAN SHEET.*

NOTES:

1. FOR ACCURATE RIGHT OF WAY DATA, CONTACT RIGHT OF WAY ENGINEERING AT THE DISTRICT OFFICE.

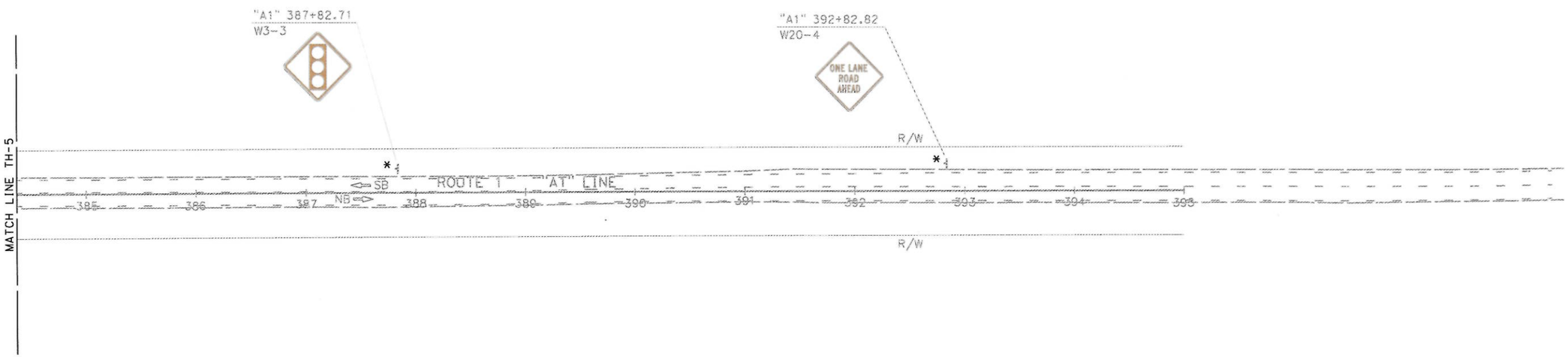


STATE OF CALIFORNIA - DEPARTMENT OF TRANSPORTATION

Caltrans

TRAFFIC DESIGN

FUNCTIONAL SUPERVISOR: MOHAMMED QATAMI

CALCULATED-DESIGNED BY: QUAY CHESTER

CHECKED BY: FAWZI YAGHMOUR

REVISED BY

DATE REVISED

# TRAFFIC HANDLING PLAN

## STAGE 2

SCALE: 1" = 50'

TH-6

*APPROVED FOR TRAFFIC HANDLING WORK ONLY*

LAST REVISION 00-00-00

DATE PLOTTED => 1/24/2022
TIME PLOTTED => 9:56:24 AM

| Dist | COUNTY | ROUTE | POST MILES TOTAL PROJECT | SHEET No. | TOTAL SHEETS |
|---|---|---|---|---|---|
| 05 | Mon | 1 | 63.00 | 13 | |

REGISTERED CIVIL ENGINEER DATE

PLANS APPROVAL DATE

REGISTERED PROFESSIONAL ENGINEER QUAY F. CHESTER No. 92096 Exp. 03/31/23 CIVIL STATE OF CALIFORNIA

*THE STATE OF CALIFORNIA OR ITS OFFICERS OR AGENTS SHALL NOT BE RESPONSIBLE FOR THE ACCURACY OR COMPLETENESS OF SCANNED COPIES OF THIS PLAN SHEET.*

## TEMPORARY PAVEMENT DELINEATION QUANTITIES

| SHEET No. | STAGE | ROUTE | LOCATION STA FROM | LOCATION STA TO | DIRECTION | DETAIL No. | TEMPORARY TRAFFIC STRIPE (TAPE) LF | REMOVE PAVEMENT MARKER* EA | REMOVE THERMOPLASTIC TRAFFIC STRIPE* LF | TEMPORARY PAVEMENT MARKING (TAPE) SQFT | DESCRIPTION |
|---|---|---|---|---|---|---|---|---|---|---|---|
| TH-2 | 1 | 1 | "A1" 372+83 | 372+83 | NB | | | | | 12 | LIMIT LINE |
| | | | 372+83 | 372+84 | NB/SB | | | | | 28 | TYPE 1 ARROWS |
| | | | 372+83 | 382+83 | NB/SB | 22 | | 86 | 2,000 | | |
| | | | 374+66 | 382+04 | NB | 27B | 739 | | | | |
| | | | 382+83 | 382+83 | SB | | | | | 12 | LIMIT LINE |
| | | | 382+83 | 382+83 | NB/SB | | | | | 28 | TYPE 1 ARROWS |
| TH-5 | 2 | 1 | "A1" 374+66 | 382+04 | SB | 27B | 738 | | | | |
| TOTAL | | | | | | | 1,477 | 86 | 2,000 | 80 | |

* QUANTITY ADDED TO SHEET PDQ-1

## TEMPORARY CRASH CUSHION AND CHANNELIZER

| SHEET No. | STAGE | ALTERNATIVE TEMPORARY CRASH CUSHION EA | CHANNELIZER (SURFACE MOUNTED) EA |
|---|---|---|---|
| TH-2 | 1 | 2 | 14 |
| TH-5 | 2 | 2 | 14 |
| TOTAL | | 4 | 28 |

## STATIONARY MOUNTED CONSTRUCTION AREA SIGNS (TRAFFIC HANDLING)

| SHEET No. | STAGE | SIGN No. | SIGN DESIGNATION | SIGN MESSAGE | PANEL SIZE | No. OF POSTS AND SIZE | No. OF SIGNS |
|---|---|---|---|---|---|---|---|
| TH-1 | 1 | 1 | W20-4 | ONE LANE ROAD AHEAD | 36"x36" | 1-4"x6" | 1 |
| | | 2 | W3-3 | SIGNAL AHEAD SYMBOL | 36"x36" | 1-4"x6" | 1 |
| TH-2 | | 3 | R10-24 | BIKE PUSH BUTTON FOR GREEN LIGHT | 9"x15" | 1-4"x6" | 1 |
| | | | R10-6 | STOP HERE ON RED WITH ARROW | 24"x36" | | |
| | | 3 | R10-6 | STOP HERE ON RED WITH ARROW | 24"x36" | 1-4"x6" | 1 |
| | | | R10-24 | BIKE PUSH BUTTON FOR GREEN LIGHT | 9"x15" | | |
| | | 4 | W16-1P | SHARE THE ROAD PLAQUE | 18"x24" | 1-4"x4" | 1 |
| | | 4 | W16-1P | SHARE THE ROAD PLAQUE | 18"x24" | 1-4"x4" | 1 |
| | | 5 | W1-4R | REVERSE RIGHT CURVE | 36"x36" | 1-4"x6" | 1 |
| | | 6 | R13A (CA) | NO RIGHT TURN ON RED | 24"x36" | 1-4"x6" | 1 |
| | | | R10-6 | STOP HERE ON RED WITH ARROW | 24"x36" | | |
| | | 7 | R10-6 | STOP HERE ON RED WITH ARROW | 24"x36" | 1-4"x6" | 1 |
| TH-3 | | 1 | W20-4 | ONE LANE ROAD AHEAD | 36"x36" | 1-4"x6" | 1 |
| | | 2 | W3-3 | SIGNAL AHEAD SYMBOL | 36"x36" | 1-4"x6" | 1 |
| TH-5 | 2 | 1 | W1-4R | REVERSE RIGHT CURVE | 36"x36" | 1-4"x6" | 1 |
| TOTAL | | | | | | | 12 |

## TEMPORARY RAILING

| SHEET No. | STAGE | STATION FROM | STATION FROM | STATION TO | TEMPORARY RAILING (TYPE K) LF | OBJECT MARKER (TYPE P) * EA |
|---|---|---|---|---|---|---|
| TH-2 | 1 | "A1" | 376+09 | 381+09 | 500 | 2 |
| TH-5 | 2 | "A1" | 376+09 | 376+49 | 40 | 2 |
| | | | 380+69 | 381+09 | 40 | |
| TOTAL | | | | | 580 | 4 |

* QUANTITY ADDED TO SHEET SQ-1

# TRAFFIC HANDLING QUANTITIES

THQ-1

STATE OF CALIFORNIA - DEPARTMENT OF TRANSPORTATION

Caltrans TRAFFIC DESIGN

FUNCTIONAL SUPERVISOR: MOHAMMED QATAMI

CALCULATED-DESIGNED BY: FAWZI YAGHMOUR

CHECKED BY

REVISED BY

DATE REVISED

LAST REVISION 00-00-00

DATE PLOTTED => 1/24/2022

TIME PLOTTED => 9:56:24 AM

| Dist | COUNTY | ROUTE | POST MILES TOTAL PROJECT | SHEET No. | TOTAL SHEETS |
|---|---|---|---|---|---|
| 05 | Mon | 1 | 63.00 | 14 | |

REGISTERED CIVIL ENGINEER DATE

PLANS APPROVAL DATE

REGISTERED PROFESSIONAL ENGINEER QUAY F. CHESTER No. 92096 Exp 03/31/23 CIVIL STATE OF CALIFORNIA

*THE STATE OF CALIFORNIA OR ITS OFFICERS OR AGENTS SHALL NOT BE RESPONSIBLE FOR THE ACCURACY OR COMPLETENESS OF SCANNED COPIES OF THIS PLAN SHEET.*

## NOTES:

1. FOR ACCURATE RIGHT OF WAY DATA, CONTACT RIGHT OF WAY ENGINEERING AT THE DISTRICT OFFICE.

## ABBREVIATIONS:

Rem - REMOVE

## LEGEND:

IGR$_E$ GUARD RAIL DELINEATOR TYPE E (CLASS 1)

------- REPLACE ROADSIDE SIGN

ROADSIDE SIGN - ONE POST (STEEL)

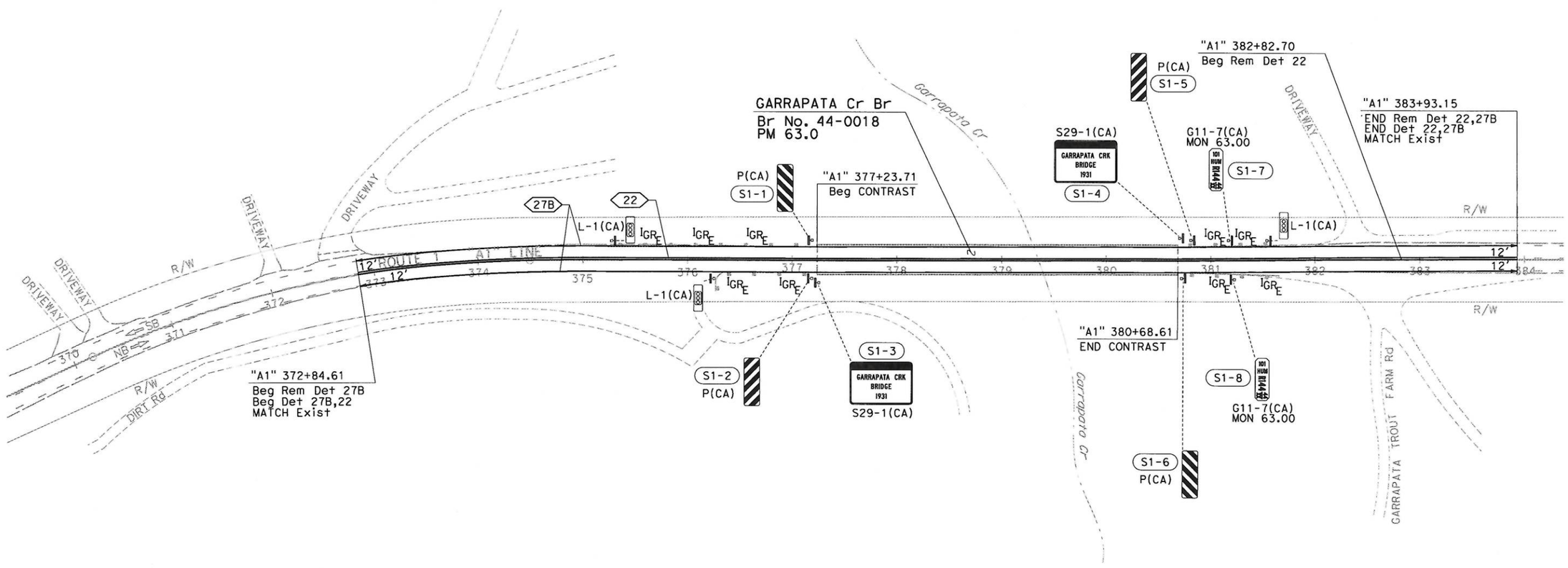


*APPROVED FOR PAVEMENT DELINEATION AND SIGN WORK ONLY*

# PAVEMENT DELINEATION AND SIGN PLAN

SCALE: 1" = 50'

**PD-1**

STATE OF CALIFORNIA - DEPARTMENT OF TRANSPORTATION

Caltrans

TRAFFIC DESIGN

FUNCTIONAL SUPERVISOR: MOHAMMED OATAMI

CALCULATED-DESIGNED BY: QUAY CHESTER

CHECKED BY: FAWZI YAGHMOUR

REVISED BY

DATE REVISED

LAST REVISION 00-00-00

DATE PLOTTED => 1/24/2022

TIME PLOTTED => 9:56:25 AM

BORDER LAST REVISED 7/2/2010

USERNAME =>

DGN FILE => ...\0516000163na001.dgn

RELATIVE BORDER SCALE IS IN INCHES 0 1 2 3

UNIT 4651

PROJECT NUMBER & PHASE 0516000163

| Dist | COUNTY | ROUTE | POST MILES TOTAL PROJECT | SHEET No. | TOTAL SHEETS |
|---|---|---|---|---|---|
| 05 | Mon | 1 | 63.00 | 15 | |

REGISTERED CIVIL ENGINEER DATE

PLANS APPROVAL DATE

REGISTERED PROFESSIONAL ENGINEER QUAY F. CHESTER No. 92096 Exp. 03/31/23 CIVIL STATE OF CALIFORNIA

*THE STATE OF CALIFORNIA OR ITS OFFICERS OR AGENTS SHALL NOT BE RESPONSIBLE FOR THE ACCURACY OR COMPLETENESS OF SCANNED COPIES OF THIS PLAN SHEET.*

# PAVEMENT DELINEATION QUANTITIES

| SHEET No. | ROUTE | LOCATION STA FROM | LOCATION STA TO | DIRECTION | DETAIL No. | PAVEMENT MARKER (RETRO-REFLECTIVE) TYPE D | 6" THERMOPLASTIC TRAFFIC STRIPE (ENHANCED WET NIGHT VISIBILITY) SOLID WHITE | 6" THERMOPLASTIC TRAFFIC STRIPE (ENHANCED WET NIGHT VISIBILITY) SOLID YELLOW | 6" TRAFFIC STRIPE TAPE WITH CONTRAST | REMOVE PAVEMENT MARKER | REMOVE THERMOPLASTIC TRAFFIC STRIPE | GUARD RAILING DELINEATOR TYPE E |
|---|---|---|---|---|---|---|---|---|---|---|---|---|
| | | | | | | EA | LF | LF | LF | EA | LF | EA |
| PD-1 | 1 | "A1" 372+85 | 377+24 | NB/SB | 27B | | 878 | | | | 878 | 9 |
| | | 377+24 | 380+69 | NB/SB | 27B | | | | 690 | | | |
| | | 380+69 | 383+93 | NB/SB | 27B | | 649 | | | | 649 | |
| | | 382+83 | 383+93 | NB/SB | 22 | | | | | 12 | 221 | |
| | | 372+85 | 383+93 | NB/SB | 22 | 96 | | 2,217 | | | | |
| SUBTOTAL | | | | | | 96 | 1,527 | 2,217 | 690 | 12 | 1,748 | 9 |
| FROM SHEET THQ-1 | | | | | | | | | | 86 | 2,000 | |
| TOTAL | | | | | | 96 | 3,744 | | 690 | 98 | 3,744 | 9 |

STATE OF CALIFORNIA - DEPARTMENT OF TRANSPORTATION

Caltrans

TRAFFIC DESIGN

FUNCTIONAL SUPERVISOR: MOHAMMED OATAMI

CALCULATED-DESIGNED BY: QUAY CHESTER

CHECKED BY: FAWZI YAGHMOUR

REVISED BY

DATE REVISED

PAVEMENT DELINEATION QUANTITIES

PDQ-1

LAST REVISION 00-00-00

DATE PLOTTED => 1/24/2022
TIME PLOTTED => 9:56:25 AM

| Dist | COUNTY | ROUTE | POST MILES TOTAL PROJECT | SHEET No. | TOTAL SHEETS |
|---|---|---|---|---|---|
| 05 | Mon | 1 | 63.00 | 16 | |

REGISTERED CIVIL ENGINEER DATE

PLANS APPROVAL DATE

REGISTERED PROFESSIONAL ENGINEER QUAY F. CHESTER No. 92096 Exp. 03/31/23 CIVIL STATE OF CALIFORNIA

*THE STATE OF CALIFORNIA OR ITS OFFICERS OR AGENTS SHALL NOT BE RESPONSIBLE FOR THE ACCURACY OR COMPLETENESS OF SCANNED COPIES OF THIS PLAN SHEET.*

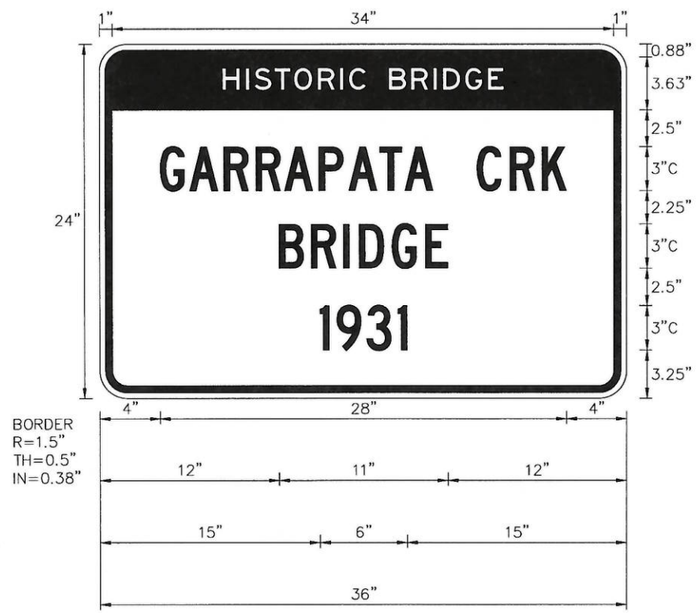


S29-1 (CA)

## SIGN DETAILS

NO SCALE

**SD-1**

STATE OF CALIFORNIA - DEPARTMENT OF TRANSPORTATION

Caltrans

**TRAFFIC DESIGN**

FUNCTIONAL SUPERVISOR: MOHAMMED QATAMI

CALCULATED-DESIGNED BY: QUAY CHESTER

CHECKED BY: FAWZI YAGHMOUR

REVISED BY

DATE REVISED

LAST REVISION 00-00-00

DATE PLOTTED => 1/24/2022
TIME PLOTTED => 9:56:26 AM

BORDER LAST REVISED 7/2/2010

USERNAME =>
DGN FILE => ...\0516000163ob001.dgn

RELATIVE BORDER SCALE IS IN INCHES 0 1 2 3

UNIT 4651

PROJECT NUMBER & PHASE 0516000163

| Dist | COUNTY | ROUTE | POST MILES TOTAL PROJECT | SHEET No. | TOTAL SHEETS |
|---|---|---|---|---|---|
| 05 | Mon | 1 | 63.00 | 17 | |

REGISTERED CIVIL ENGINEER DATE

PLANS APPROVAL DATE

REGISTERED PROFESSIONAL ENGINEER QUAY F. CHESTER No. 92096 Exp 03/31/23 CIVIL STATE OF CALIFORNIA

*THE STATE OF CALIFORNIA OR ITS OFFICERS OR AGENTS SHALL NOT BE RESPONSIBLE FOR THE ACCURACY OR COMPLETENESS OF SCANNED COPIES OF THIS PLAN SHEET.*

# ROADSIDE SIGN QUANTITIES

| SHEET No. | SIGN No. | SIGN DESIGNATION | SIGN MESSAGE | PANEL SIZE | No. OF POSTS AND POST SIZE | BACKGROUND SHEETING COLOR | BACKGROUND RETROREFLECTIVITY ASTM TYPE | LEGEND SHEETING COLOR | LEGEND RETROREFLECTIVITY ASTM TYPE | FURNISH SINGLE SHEET ALUMINUM SIGN (0.063"-UNFRAMED) SQFT | ROADSIDE SIGN - ONE POST EA | REMOVE ROADSIDE SIGN EA | OBJECT MARKER (TYPE L-1) EA | OBJECT MARKER (TYPE P) EA |
|---|---|---|---|---|---|---|---|---|---|---|---|---|---|---|
| PD-1 | | L-1 (CA) | TYPE L OBJECT MARKER | 8"x24" | 1-TS2.5"x2.5" | FY | XI | BLACK | | 0.50 | | 1 | 1 | |
| | | L-1 (CA) | TYPE L OBJECT MARKER | 8"x24" | 1-TS2.5"x2.5" | FY | XI | BLACK | | 0.50 | | 1 | 1 | |
| | | L-1 (CA) | TYPE L OBJECT MARKER | 8"x24" | 1-TS2.5"x2.5" | FY | XI | BLACK | | 0.50 | | 1 | 1 | |
| | S1-1 | P (CA) | TYPE P OBJECT MARKER | 12"x36" | 1-TS2.5"x2.5" | FY | XI | BLACK | | 3.00 | | 1 | | 1 |
| | S1-2 | P (CA) | TYPE P OBJECT MARKER | 12"x36" | 1-TS2.5"x2.5" | FY | XI | BLACK | | 3.00 | | 1 | | 1 |
| | S1-3 | S29-1 (CA) | HISTORIC BRIDGE | 36"x24" | 1-TS2.5"x2.5" | CREAM | XI | BROWN | XI | 6.00 | 1 | 1 | | |
| | S1-4 | S29-1 (CA) | HISTORIC BRIDGE | 36"x24" | 1-TS2.5"x2.5" | CREAM | XI | BROWN | XI | 6.00 | 1 | 1 | | |
| | S1-5 | P (CA) | TYPE P OBJECT MARKER | 12"x36" | 1-TS2.5"x2.5" | FY | XI | BLACK | | 3.00 | | 1 | | 1 |
| | S1-6 | P (CA) | TYPE P OBJECT MARKER | 12"x36" | 1-TS2.5"x2.5" | FY | XI | BLACK | | 3.00 | | 1 | | 1 |
| | S1-7 | G11-7 (CA) | 1 MON 63.00 | 8"x24" | 1-TS2.5"x2.5" | WHITE | IX | BLACK | | 1.33 | 1 | 1 | | |
| | S1-8 | G11-7 (CA) | 1 MON 63.00 | 8"x24" | 1-TS2.5"x2.5" | WHITE | IX | BLACK | | 1.33 | 1 | 1 | | |
| FROM SHEET THQ-1 | | | | | | | | | | | | | | 4 |
| TOTAL | | | | | | | | | | 28.16 | 4 | 11 | 3 | 8 |

## SIGN QUANTITIES

SQ-1

STATE OF CALIFORNIA - DEPARTMENT OF TRANSPORTATION

Caltrans TRAFFIC DESIGN

FUNCTIONAL SUPERVISOR: MOHAMMED QATAMI

CALCULATED-DESIGNED BY: QUAY CHESTER

CHECKED BY: FAWZI YAGHMOUR

REVISED BY

DATE REVISED

LAST REVISION 00-00-00

DATE PLOTTED => 1/24/2022
TIME PLOTTED => 9:56:27 AM

| Dist | COUNTY | ROUTE | POST MILES TOTAL PROJECT | SHEET No. | TOTAL SHEETS |
|---|---|---|---|---|---|
| 05 | Mon | 1 | 63.0 | 18 | |

REGISTERED CIVIL ENGINEER DATE

PLANS APPROVAL DATE

REGISTERED PROFESSIONAL ENGINEER No. Exp. CIVIL STATE OF CALIFORNIA

*THE STATE OF CALIFORNIA OR ITS OFFICERS OR AGENTS SHALL NOT BE RESPONSIBLE FOR THE ACCURACY OR COMPLETENESS OF SCANNED COPIES OF THIS PLAN SHEET.*

## MIDWEST GUARDRAIL SYSTEM QUANTITIES

| SHEET No. | STATION | LAYOUT TYPE (N) | DIRECTION | REMOVE GUARDRAIL | MIDWEST GUARDRAIL SYSTEM (STEEL POST) | ALTERNATIVE IN-LINE TERMINAL SYSTEM | TRANSITION RAILING (TYPE WB-31) | END ANCHOR ASSEMBLY (TYPE SFT) | END CAP (TYPE TC) | BURRIED POST END ANCHOR | TREATED WOOD WASTE |
|---|---|---|---|---|---|---|---|---|---|---|---|
| | | | NB/SB | LF | LF | EA | EA | EA | EA | EA | LB |
| L-1 | "A1" 375+48.72 TO 376+98.72 | 12AA | SB | 140 | 150 | 1 | 1 | | 1 | | 700 |
| | "A1" 376+26.67 TO 376+98.72 | 12A | NB | 65 | 82 | | 1 | 1 | 1 | | 340 |
| | "A1" 380+93.52 TO 381+59.77 | 12C | SB | 65 | 68 | | 1 | | 1 | 1 | 340 |
| | "A1" 380+93.52 TO 381+59.77 | 12CC | NB | 65 | 68 | | 1 | | 1 | 1 | 340 |
| | TOTAL | | | 335 | 368 | 1 | 4 | 1 | 4 | 2 | 1720 |

(N) NOT A SEPARATE PAY ITEM, FOR INFORMATION ONLY.

## TEMPORARY HIGH VISIBILITY FENCE

| SHEET No. | STATION | LF |
|---|---|---|
| L-1 | "A1" 375+85.75 TO 378+15.75 | 260 |
| | "A1" 378+00.00 (ALONG OF TOP OF SLOPE UNDER THE BRIDGE) | 100 |
| TOTAL | | 360 |

# SUMMARY OF QUANTITIES
# Q-1

| REVISED BY | DATE REVISED |
|---|---|
| HUY HA | 00-00-00 |

| CALCULATED-DESIGNED BY | CHECKED BY |
|---|---|
| HUY HA | JOSE HUERTA |

| FUNCTIONAL SUPERVISOR |
|---|
| JOSE HUERTA |

STATE OF CALIFORNIA - DEPARTMENT OF TRANSPORTATION

Caltrans DESIGN

LAST REVISION 00-00-00 DATE PLOTTED => $DATE TIME PLOTTED => $TIME

| Dist | COUNTY | ROUTE | POST MILES TOTAL PROJECT | SHEET No. | TOTAL SHEETS |
|---|---|---|---|---|---|
| 05 | MON | 1 | 63 | 19 | |

**PRELIMINARY**

LICENSED LANDSCAPE ARCHITECT

PLANS APPROVAL DATE

*THE STATE OF CALIFORNIA OR ITS OFFICERS OR AGENTS SHALL NOT BE RESPONSIBLE FOR THE ACCURACY OR COMPLETENESS OF SCANNED COPIES OF THIS PLAN SHEET.*

LICENSED LANDSCAPE ARCHITECT Jessica Bailey No. 4812 Signature 07-31-23 Renewal Date Date STATE OF CALIFORNIA

**NOTE:**

FOR ACCURATE RIGHT OF WAY DATA, CONTACT RIGHT OF WAY ENGINEERING AT THE DISTRICT OFFICE.

**LEGEND:**

EROSION CONTROL (TYPE 1)

EROSION CONTROL (TYPE 2)

## FIBER ROLLS

| SEQUENCE | ITEM | MATERIAL | | REMARKS |
|---|---|---|---|---|
| | | DESCRIPTION | TYPE | |
| INSTALL BEFORE HYDRAULIC APPLICATIONS | FIBER ROLLS | FIBER ROLL | 8" TO 10" Dia | TYPE 1 INSTALLATION |

## EROSION CONTROL (TYPE 1)

| SEQUENCE | ITEM | MATERIAL | | APPLICATION RATE | REMARKS |
|---|---|---|---|---|---|
| | | DESCRIPTION | TYPE | | |
| STEP 1 | COMPOST | COMPOST | MEDIUM | 135 CY/AC | COMPOST RATE EQUALS APPROXIMATELY 1" DEPTH |
| STEP 2 | INCORPORATE | COMPOST | | | 12" DEPTH |
| STEP 3 | HYDROSEED | SEED | MIX | 24.2 LB/AC | |
| | | FIBER | WOOD | 200 LB/AC | |
| STEP 4 | HYDROMULCH | FIBER | WOOD | 2,000 LB/AC | |
| | | TACKIFIER | PSYLLIUM | 200 LB/AC | |

## EROSION CONTROL (TYPE 2)

| SEQUENCE | ITEM | MATERIAL | | | APPLICATION RATE | REMARKS |
|---|---|---|---|---|---|---|
| | | DESCRIPTION | TYPE | FASTENER | | |
| STEP 1 | COMPOST | COMPOST | FINE | | 135 CY/AC | COMPOST RATE EQUALS APPROXIMATELY 1" DEPTH |
| STEP 2 | RECP (NETTING) | COIR NETTING | A | 8-GAUGE, 8-INCH STEEL STAPLE | | |
| STEP 3 | HYDROSEED | SEED | MIX | | 24.2 LB/AC | |
| | | FIBER | WOOD | | 200 LB/AC | |
| STEP 4 | HYDROMULCH | FIBER | WOOD | | 2,000 LB/AC | |
| | | TACKIFIER | PSYLLIUM | | 200 LB/AC | |

## SEED MIX

| BOTANICAL NAME (COMMON NAME) | PERCENT GERMINATION (MINIMUM) | POUNDS PURE LIVE SEED PER ACRE (SLOPE MEASUREMENT) |
|---|---|---|
| ACMISPON GLABER (DEER WEED) | 80 | 3 |
| ARTEMISIA CALIFORNICA (CALIFORNIA SAGEBRUSH) | 60 | 0.5 |
| BROMUS CARINATUS (CALIFRONIA BROME) | 90 | 7 |
| ERIOGONUM PARVIFOLIUM (SEACLIFF BUCKWHEAT) | 45 | 2 |
| ERIOPHYLLUM STAECHADIFOLIUM (LIZARDTAIL) | | |
| FESTUCA MICROSTACHYS (SMALL FESCUE) | 90 | 3 |
| LUPINUS BICOLOR (BICOLOR LUPINE) | 85 | 5 |
| MELICA IMPERFECTA (COAST MELIC) | 70 | 5 |
| SALVIA MELLIFERA (BLACK SAGE) | 60 | 1 |

## EROSION CONTROL QUANTITIES

| SHEET | DESCRIPTION | INCORPORATE MATERIALS | HYDROSEED | HYDROMULCH | COMPOST | ROLLED EROSION CONTROL PRODUCT (NETTING) | FIBER ROLLS |
|---|---|---|---|---|---|---|---|
| | | SQFT | SQFT | SQFT | CY | SQFT | LF |
| ECL-1 | EC (TYPE 1) | 3780 | 3780 | 3780 | 12 | | |
| | EC (TYPE 2) | | 9200 | 9200 | 27 | 9200 | |
| | FIBER ROLLS | | | | | | 410 |
| | TOTAL | 3780 | 12,980 | 12,980 | 39 | 9200 | 410 |

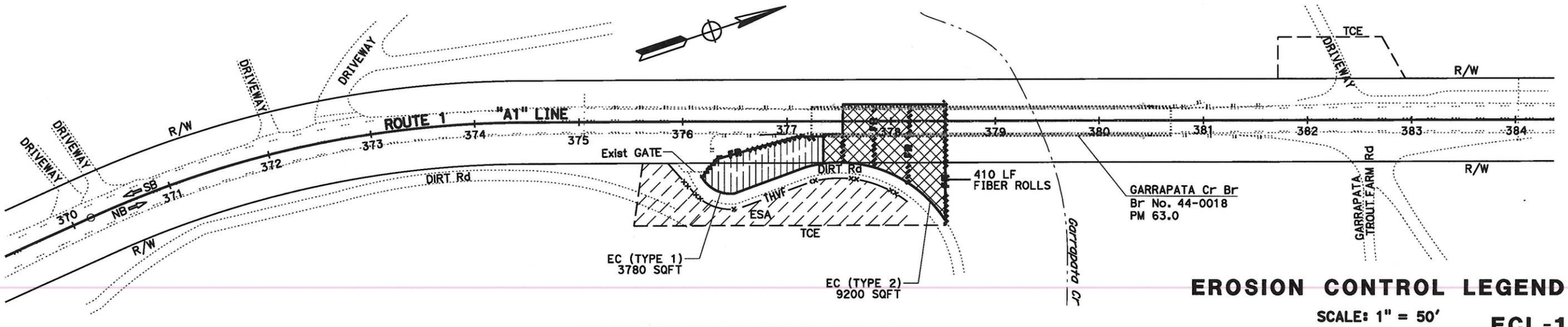


**EROSION CONTROL LEGEND**

SCALE: 1" = 50'

**ECL-1**

*APPROVED FOR EROSION CONTROL WORK ONLY*

STATE OF CALIFORNIA - DEPARTMENT OF TRANSPORTATION

LANDSCAPE ARCHITECTURE

SENIOR LANDSCAPE ARCHITECT: CORBY KILMER

CALCULATED-DESIGNED BY: JESSICA BAILEY

CHECKED BY: PKB

REVISED BY

DATE REVISED

LAST REVISION 00-00-00

DATE PLOTTED => 29-JAN-2022

TIME PLOTTED => 11:26

| Dist | COUNTY | ROUTE | POST MILES TOTAL PROJECT | SHEET No. | TOTAL SHEETS |
|---|---|---|---|---|---|
| 05 | MON | 1 | 62.97 | 20 | |

REGISTERED ELECTRICAL ENGINEER DATE

PLANS APPROVAL DATE

REGISTERED PROFESSIONAL ENGINEER No. Exp. ELECTRICAL STATE OF CALIFORNIA

THE ACCURACY OR COMPLETENESS OF SCANNED COPIES OF THIS PLAN SHEET.

## LEGEND:

1 120/240 V, SINGLE PHASE, 3-WIRE, TYPE A SERVICE ON TEMPORARY WOOD POLE WITH THE FOLLOWING CIRCUIT BREAKERS:

| AMPERES | VOLTS | POLES | NAMEPLATE | METER | PHOTOELECTRIC CONTROL TYPE |
|---|---|---|---|---|---|
| 60 | 240 | 2 | MAIN DISCONNECT | YES | - |
| 20 | 120 | 1 | LIGHTING | YES | IV |
| 15 | 120 | 1 | FLASHING BEACON | YES | - |
| 30 | 120 | 1 | SIGNAL | YES | - |

2 SEE DETAIL F ON SHEET ED-2 FOR TEMPORARY WOOD POLE.

3 DEPARTMENT-FURNISHED MODEL 2070E CONTROLLER ASSEMBLY, ADD UPS AND WIRELESS MODEM. FOR CABINET PLATFORM, SEE DETAIL D ON SHEET ED-1.

4 SEE DETAIL A ON SHEET ED-1 FOR TEMPORARY WOOD POLE FB.

5 SPLICE THREE TYPE A LOOP DETECTORS TO ONE TYPE D LOOP DETECTOR IN SERIES. PLACE LOOP DETECTORS AS SHOWN IN DETAIL H ON SHEET ED-2.

6 GENERATOR SYSTEM WITH CHAIN LINK FENCE AND GATE AS SHOWN IN DETAIL E ON SHEET ED-2.

7 SEE DETAIL C ON SHEET ED-1 FOR TEMPORARY WOOD POLES Sig AND Ltg.

8 SEE DETAIL B ON SHEET ED-1 FOR TEMPORARY WOOD POLE Sig.

9 FOR R10-26 SIGN DETAILS REFER TO TRAFFIC HANDLING PLANS.

10 LOOP DETECTORS MUST HAVE 5 TURNS.

11 SEE DETAIL G SHEET ED-2.

## ABBREVIATIONS:

PG&E PACIFIC GAS AND ELECTRIC COMPANY

## SYMBOLS:

Y Y TEMPORARY WOOD POLE FB

TEMPORARY WOOD POLE Sig AND Ltg

OH OH Sig HEAD ON OVERHEAD BUNDLE

OH OH OVERHEAD BUNDLE CONDUCTORS AS NOTED

TEMPORARY WOOD POLE Sig

TEMPORARY WOOD POLE

G GENERATOR SYSTEM

TEMPORARY WOOD POLE Ltg

CHAIN LINK FENCE AND GATE

# TEMPORARY SIGNAL SYSTEMS

SCALE: 1"=20'

E-1

*APPROVED FOR ELECTRICAL WORK ONLY*

STATE OF CALIFORNIA - DEPARTMENT OF TRANSPORTATION
Caltrans ELECTRICAL DESIGN

FUNCTIONAL SUPERVISOR: ALI BAKHDOUD
CALCULATED-DESIGNED BY: BRYAN SABAGQUIT
CHECKED BY: PAUL MATOS
REVISED BY: BS
DATE REVISED: 5-26-21

LAST REVISION 00-00-00
DATE PLOTTED => 8-MAR-2022
TIME PLOTTED => 13:20

| Dist | COUNTY | ROUTE | POST MILES TOTAL PROJECT | SHEET No. | TOTAL SHEETS |
|---|---|---|---|---|---|
| 05 | MON | 1 | 62.97 | 21 | |

REGISTERED ELECTRICAL ENGINEER DATE

PLANS APPROVAL DATE

REGISTERED PROFESSIONAL ENGINEER No. Exp. ELECTRICAL STATE OF CALIFORNIA

*THE STATE OF CALIFORNIA OR ITS OFFICERS OR AGENTS SHALL NOT BE RESPONSIBLE FOR THE ACCURACY OR COMPLETENESS OF SCANNED COPIES OF THIS PLAN SHEET.*

**NOTE:**
FOR ACCURATE RIGHT OF WAY DATA, CONTACT RIGHT OF WAY ENGINEERING AT DISTRICT OFFICE.

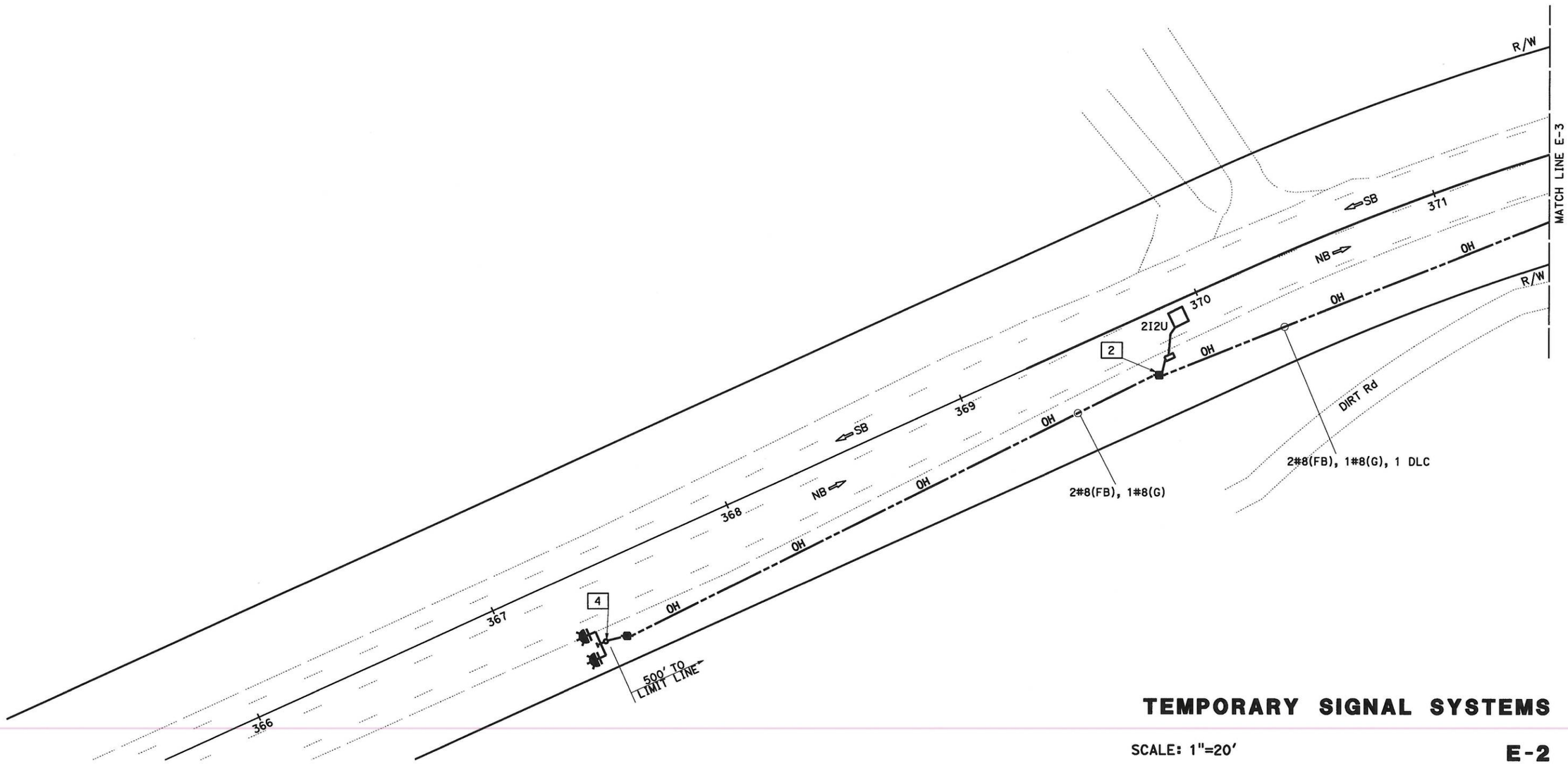


# TEMPORARY SIGNAL SYSTEMS

SCALE: 1"=20'

**E-2**

*APPROVED FOR ELECTRICAL WORK ONLY*

STATE OF CALIFORNIA - DEPARTMENT OF TRANSPORTATION
Caltrans ELECTRICAL DESIGN

FUNCTIONAL SUPERVISOR: ALI BAKHDOUD

CALCULATED-DESIGNED BY: BRYAN SABAGQUIT
CHECKED BY: PAUL MATOS

REVISED BY: BS
DATE REVISED: 5-28-21

LAST REVISION 00-00-00
DATE PLOTTED => 8-MAR-2022
TIME PLOTTED => 13:20

| Dist | COUNTY | ROUTE | POST MILES TOTAL PROJECT | SHEET No. | TOTAL SHEETS |
|---|---|---|---|---|---|
| 05 | MON | 1 | 62.97 | 22 | |

REGISTERED ELECTRICAL ENGINEER DATE

PLANS APPROVAL DATE

REGISTERED PROFESSIONAL ENGINEER No. Exp. ELECTRICAL STATE OF CALIFORNIA

*THE STATE OF CALIFORNIA OR ITS OFFICERS OR AGENTS SHALL NOT BE RESPONSIBLE FOR THE ACCURACY OR COMPLETENESS OF SCANNED COPIES OF THIS PLAN SHEET.*

**NOTE:**
FOR ACCURATE RIGHT OF WAY DATA, CONTACT RIGHT OF WAY ENGINEERING AT DISTRICT OFFICE.

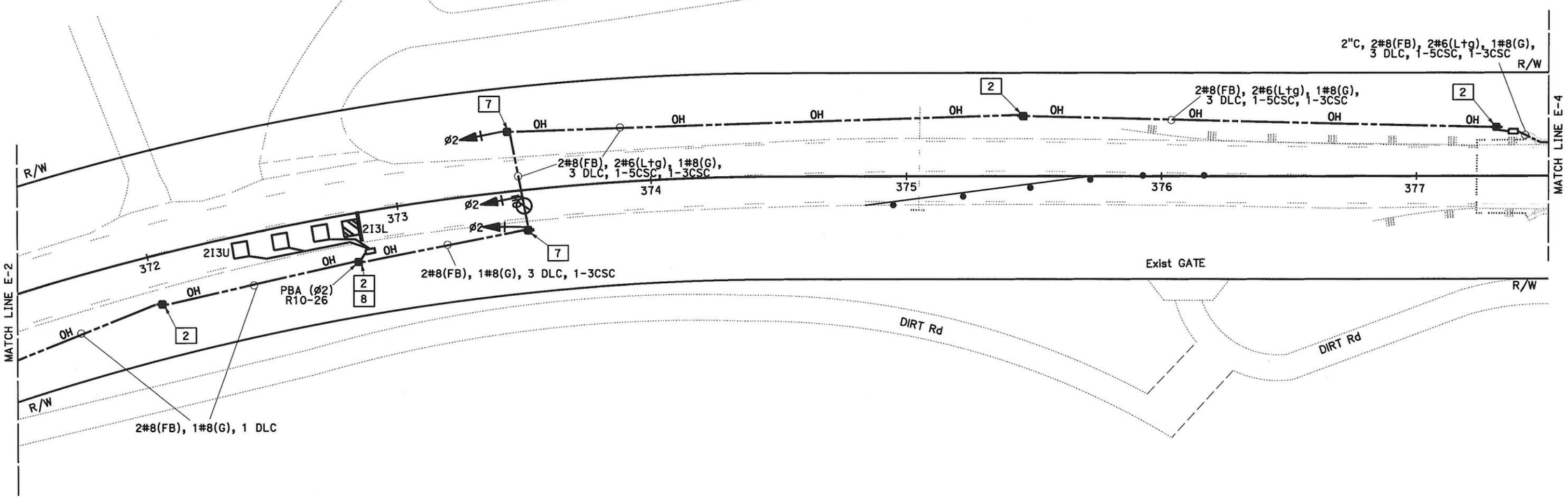


# TEMPORARY SIGNAL SYSTEMS

SCALE: 1"=20'

**E-3**

*APPROVED FOR ELECTRICAL WORK ONLY*

| | |
|---|---|
| REVISED BY | BS |
| DATE REVISED | 5-28-21 |
| CALCULATED-DESIGNED BY | BRYAN SABAGQUIT |
| CHECKED BY | PAUL MATOS |
| FUNCTIONAL SUPERVISOR | ALI BAKHDOUD |

STATE OF CALIFORNIA - DEPARTMENT OF TRANSPORTATION
Caltrans ELECTRICAL DESIGN

LAST REVISION 00-00-00 | DATE PLOTTED => 8-MAR-2022 | TIME PLOTTED => 13:20

| Dist | COUNTY | ROUTE | POST MILES TOTAL PROJECT | SHEET No. | TOTAL SHEETS |
|---|---|---|---|---|---|
| 05 | MON | 1 | 62.97 | 23 | |

REGISTERED ELECTRICAL ENGINEER DATE

PLANS APPROVAL DATE

REGISTERED PROFESSIONAL ENGINEER No. Exp. ELECTRICAL STATE OF CALIFORNIA

*THE STATE OF CALIFORNIA OR ITS OFFICERS OR AGENTS SHALL NOT BE RESPONSIBLE FOR THE ACCURACY OR COMPLETENESS OF SCANNED COPIES OF THIS PLAN SHEET.*

**NOTE:**
FOR ACCURATE RIGHT OF WAY DATA, CONTACT RIGHT OF WAY ENGINEERING AT DISTRICT OFFICE.

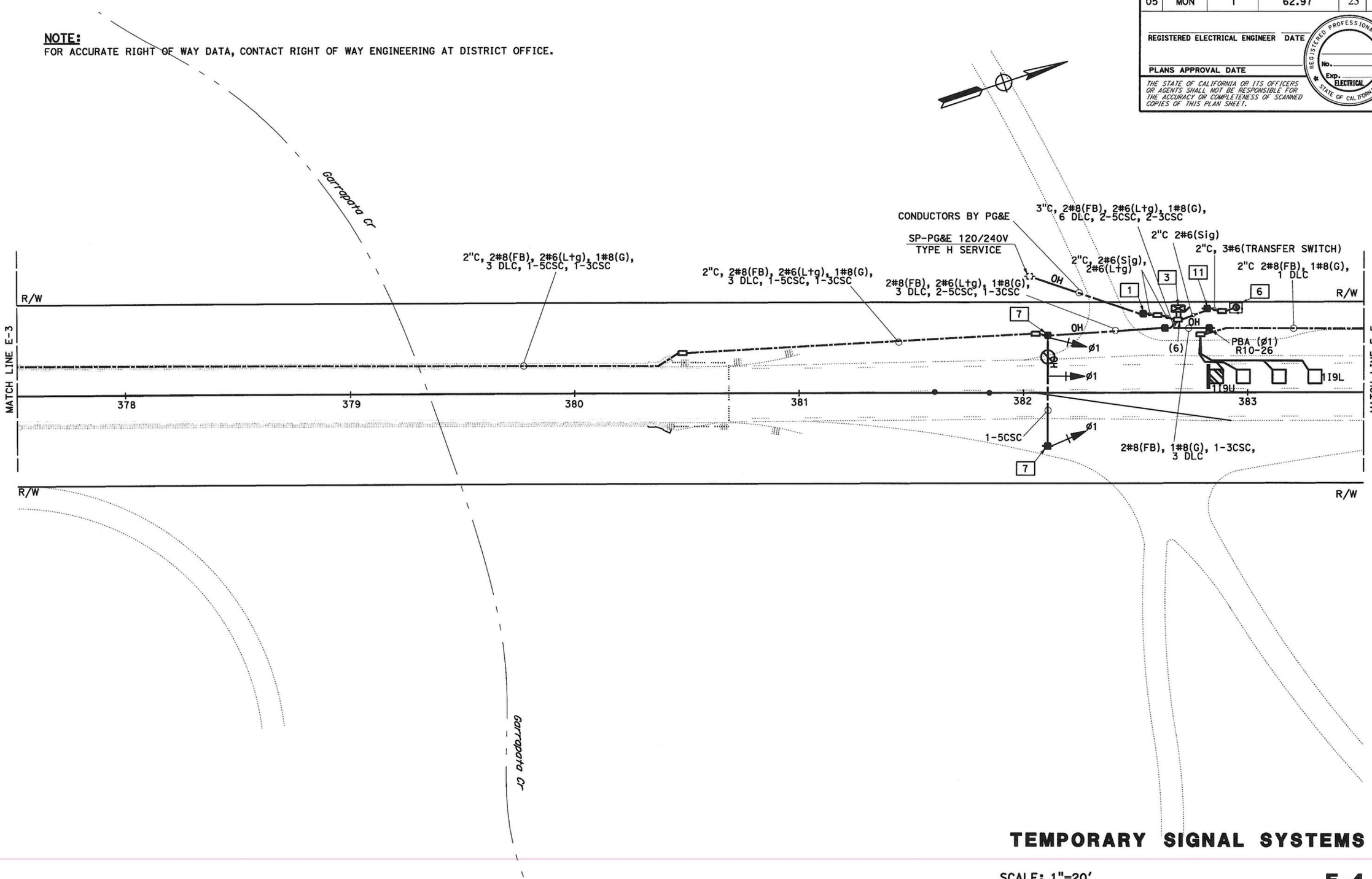


# TEMPORARY SIGNAL SYSTEMS

SCALE: 1"=20'

**E-4**

*APPROVED FOR ELECTRICAL WORK ONLY*

STATE OF CALIFORNIA - DEPARTMENT OF TRANSPORTATION
Caltrans ELECTRICAL DESIGN

FUNCTIONAL SUPERVISOR: ALI BAKHDOUD

CALCULATED-DESIGNED BY: BRYAN SABAGQUIT
CHECKED BY: PAUL MATOS

REVISED BY: BS
DATE REVISED: 5-28-21

LAST REVISION 00-00-00
DATE PLOTTED => 8-MAR-2022
TIME PLOTTED => 13:20

| Dist | COUNTY | ROUTE | POST MILES TOTAL PROJECT | SHEET No. | TOTAL SHEETS |
|---|---|---|---|---|---|
| 05 | MON | 1 | 62.97 | 24 | |

REGISTERED ELECTRICAL ENGINEER DATE

PLANS APPROVAL DATE

REGISTERED PROFESSIONAL ENGINEER No. Exp. ELECTRICAL STATE OF CALIFORNIA

*THE STATE OF CALIFORNIA OR ITS OFFICERS OR AGENTS SHALL NOT BE RESPONSIBLE FOR THE ACCURACY OR COMPLETENESS OF SCANNED COPIES OF THIS PLAN SHEET.*

**NOTE:**
FOR ACCURATE RIGHT OF WAY DATA, CONTACT RIGHT OF WAY ENGINEERING AT DISTRICT OFFICE.

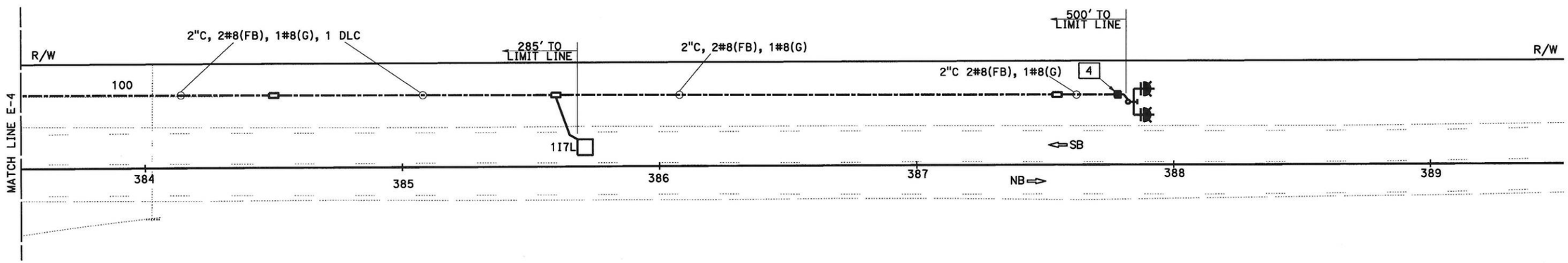


# TEMPORARY SIGNAL SYSTEMS

SCALE: 1"=20'

**E-5**

*APPROVED FOR ELECTRICAL WORK ONLY*

| | |
|---|---|
| BS | 5-28-21 |
| REVISED BY | DATE REVISED |
| BRYAN SABAGQUIT | PAUL MATOS |
| CALCULATED-DESIGNED BY | CHECKED BY |
| FUNCTIONAL SUPERVISOR | ALI BAKHDOUD |

STATE OF CALIFORNIA - DEPARTMENT OF TRANSPORTATION
Caltrans ELECTRICAL DESIGN

LAST REVISION 00-00-00 DATE PLOTTED => 8-MAR-2022 TIME PLOTTED => 13:20

| Dist | COUNTY | ROUTE | POST MILES TOTAL PROJECT | SHEET No. | TOTAL SHEETS |
|---|---|---|---|---|---|
| 05 | MON | 1 | 62.97 | 25 | |

REGISTERED ELECTRICAL ENGINEER DATE

PLANS APPROVAL DATE

REGISTERED PROFESSIONAL ENGINEER No. Exp. ELECTRICAL STATE OF CALIFORNIA

*THE STATE OF CALIFORNIA OR ITS OFFICERS OR AGENTS SHALL NOT BE RESPONSIBLE FOR THE ACCURACY OR COMPLETENESS OF SCANNED COPIES OF THIS PLAN SHEET.*

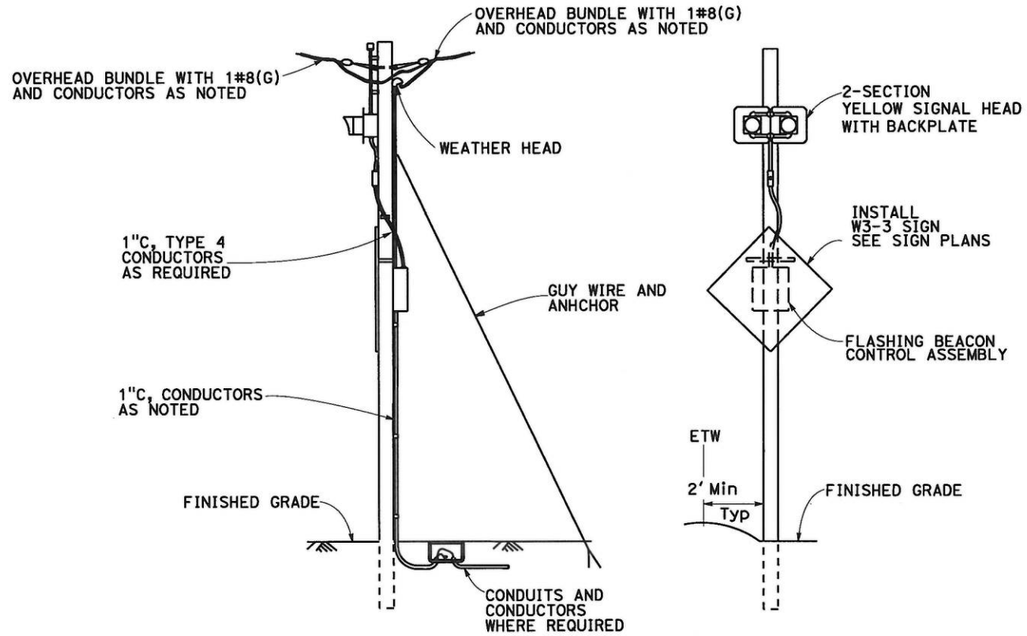


TEMPORARY WOOD POLES FB
**DETAIL A**

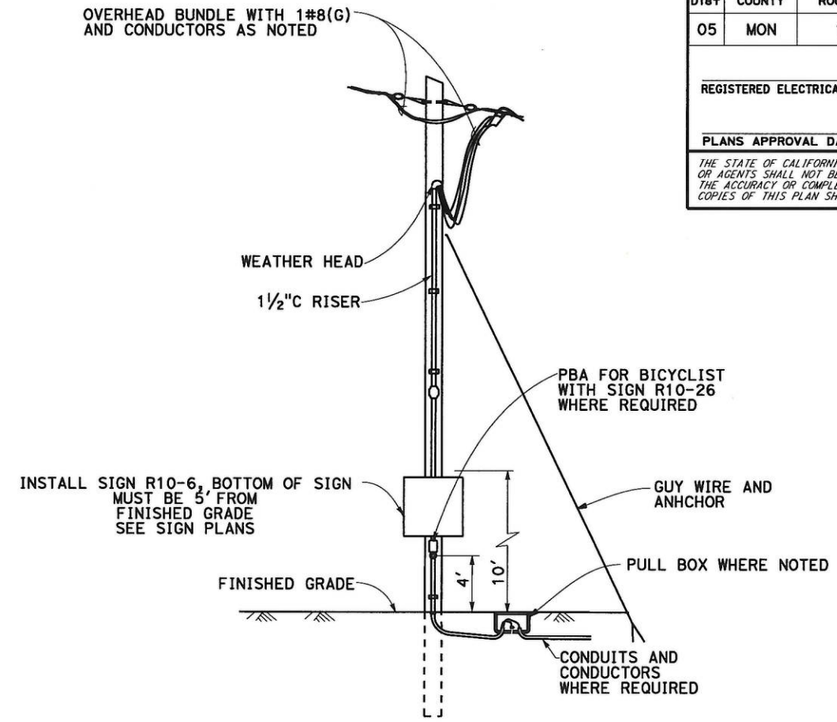


TEMPORARY WOOD POLE Sig
**DETAIL B**

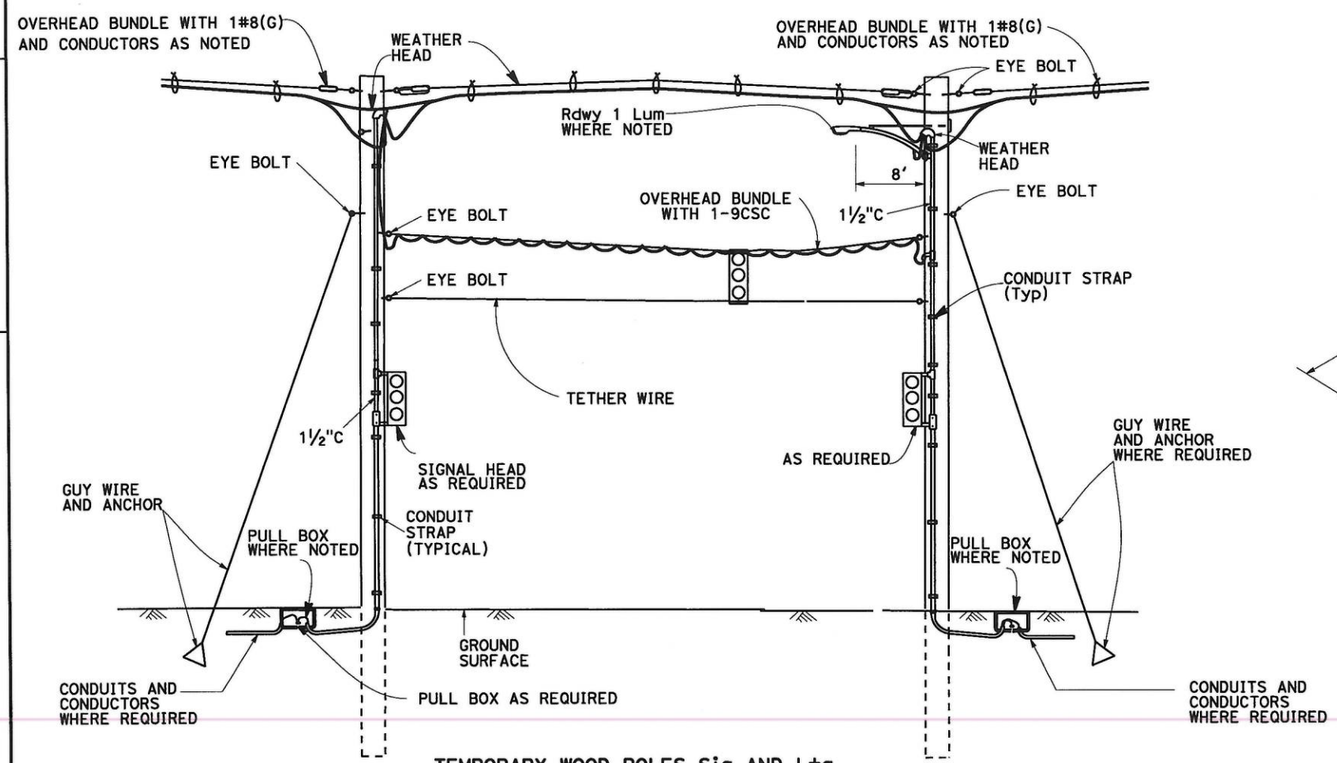


TEMPORARY WOOD POLES Sig AND Ltg
**DETAIL C**

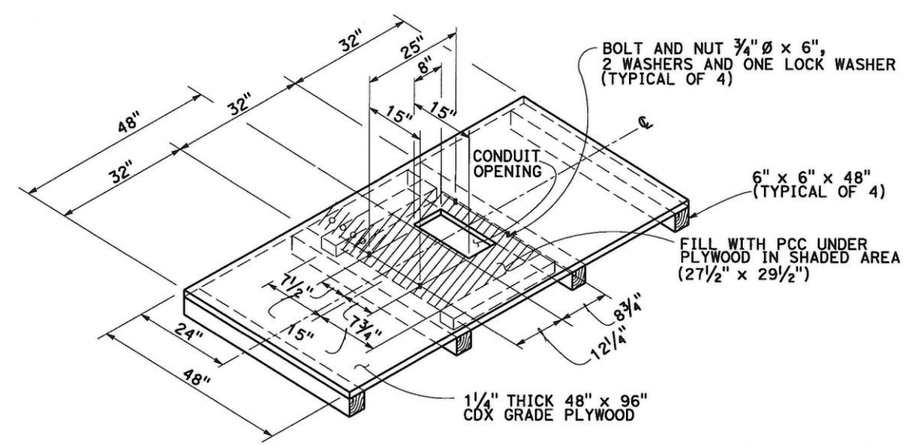


CABINET PLATFORM
**DETAIL D**

# ELECTRICAL DETAILS

NO SCALE

**ED-1**

STATE OF CALIFORNIA - DEPARTMENT OF TRANSPORTATION
Caltrans® ELECTRICAL DESIGN

FUNCTIONAL SUPERVISOR: ALI BAKHDOUD
CALCULATED-DESIGNED BY: BRYAN SABAGQUIT
CHECKED BY: PAUL MATOS
REVISED BY: BS
DATE REVISED: 5-28-21

LAST REVISION 00-00-00
DATE PLOTTED => 8-MAR-2022
TIME PLOTTED => 13:20

| Dist | COUNTY | ROUTE | POST MILES TOTAL PROJECT | SHEET No. | TOTAL SHEETS |
|---|---|---|---|---|---|
| 05 | MON | 1 | 62.97 | 26 | |

REGISTERED ELECTRICAL ENGINEER DATE

PLANS APPROVAL DATE

REGISTERED PROFESSIONAL ENGINEER No. Exp. ELECTRICAL STATE OF CALIFORNIA

*THE STATE OF CALIFORNIA OR ITS OFFICERS OR AGENTS SHALL NOT BE RESPONSIBLE FOR THE ACCURACY OR COMPLETENESS OF SCANNED COPIES OF THIS PLAN SHEET.*

**NOTE:**
TEMPORARY TRAFFIC SIGNAL SYSTEM WILL BE INITIALLY POWERED BY PRIMARY AND SECONDARY GENERATORS. SWAP TO UTILITY POWER AND BACK UP GENERATOR CONFIGURATION ONCE PG&E SERVICE BECOMES AVAILABLE.

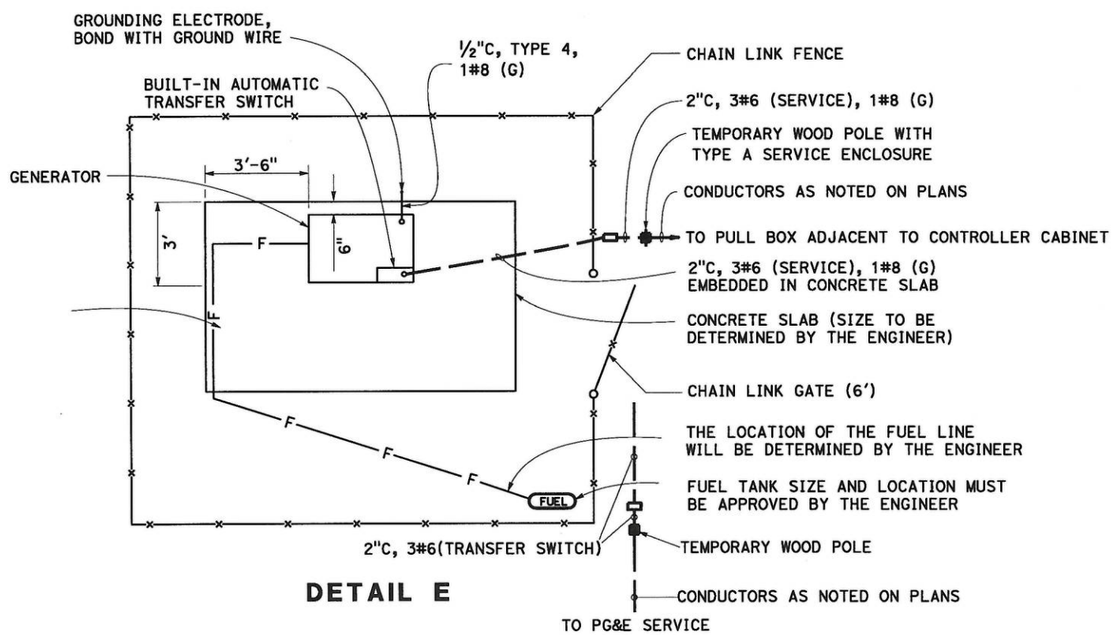


**DETAIL E**

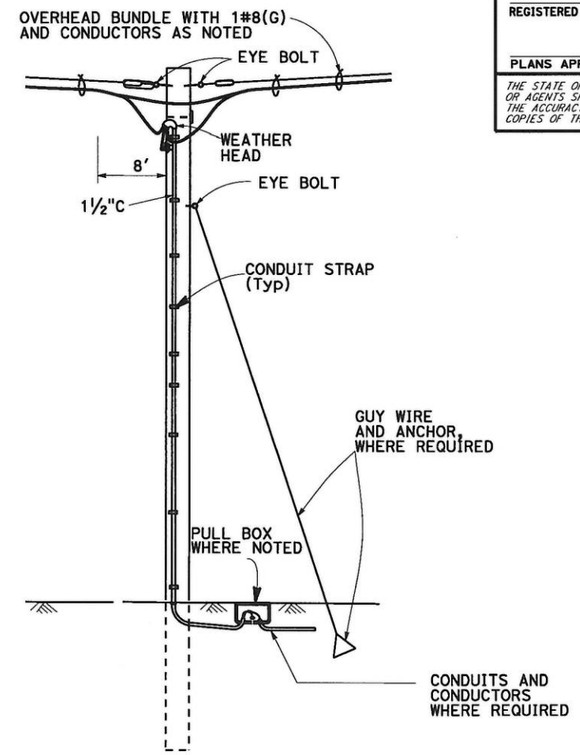


TEMPORARY WOOD POLE
**DETAIL F**

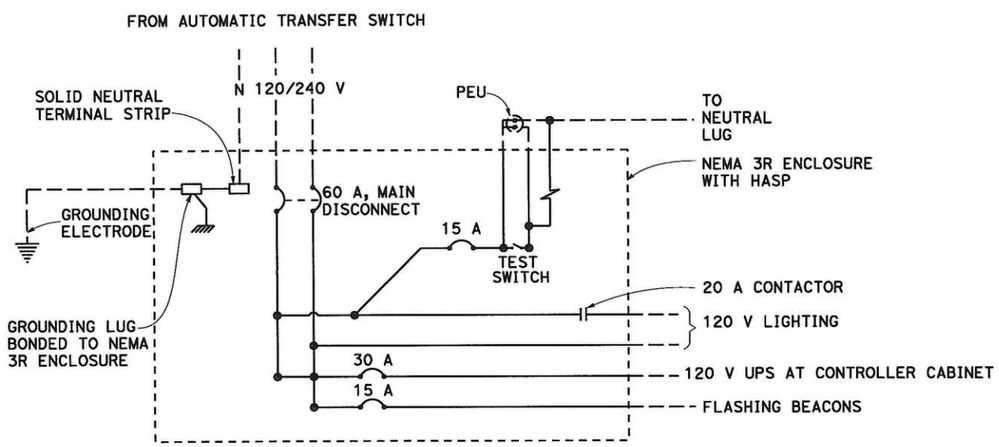


SERVICE ENCLOSURE WIRING DIAGRAM
**DETAIL G**

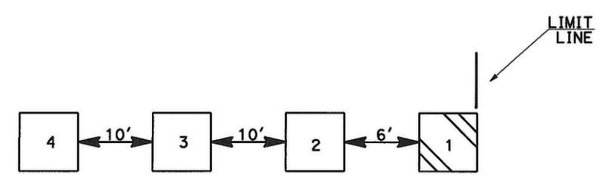


LOOP DETECTORS PLACEMENT
**DETAIL H**

**ELECTRICAL DETAILS**
NO SCALE
**ED-2**

| | |
|---|---|
| BS | 5-28-21 |
| REVISED BY | DATE REVISED |
| BRYAN SABAGQUIT | PAUL MATOS |
| CALCULATED-DESIGNED BY | CHECKED BY |
| FUNCTIONAL SUPERVISOR | ALI BAKHDOUD |

STATE OF CALIFORNIA - DEPARTMENT OF TRANSPORTATION
Caltrans
ELECTRICAL DESIGN

LAST REVISION 00-00-00 DATE PLOTTED => 8-MAR-2022 TIME PLOTTED => 13:20

| Dist | COUNTY | ROUTE | POST MILES TOTAL PROJECT | SHEET No. | TOTAL SHEETS |
|---|---|---|---|---|---|
| 05 | MON | 1 | 62.97 | 27 | |

REGISTERED ELECTRICAL ENGINEER DATE

PLANS APPROVAL DATE

REGISTERED PROFESSIONAL ENGINEER No. Exp. ELECTRICAL STATE OF CALIFORNIA

*THE STATE OF CALIFORNIA OR ITS OFFICERS OR AGENTS SHALL NOT BE RESPONSIBLE FOR THE ACCURACY OR COMPLETENESS OF SCANNED COPIES OF THIS PLAN SHEET.*

**NOTE:**
ELECTRICAL SYSTEM QUANTITY TABLES SUMMARIZE SIGNIFICANT COMPONENTS. SEE ELECTRICAL SYSTEMS PLANS AND SPECIFICATIONS TO DETERMINE ALL MATERIALS NEEDED FOR EACH SYSTEM.

## TEMPORARY SIGNAL SYSTEMS

NOT A SEPARATE BID ITEM

| SHEET No. | No. 5 PB | No. 6 PB | DETECTOR LOOP, TYPE A | DETECTOR LOOP, TYPE D | DETECTOR-STUB SHOULDER | LUMINAIRE - 165W LED | SIGNAL 3-12" (HOUSING, BACKPLATE, | APS PPB ASSEMBLY | FB CONTROLLER (FBCA) | FB TYPE 15-FBS POLE | TYPE PGE SERVICE RISER | FUSED SPLICE CONNECTOR- 2 POLE | WOOD POLE- 45FT | WOOD POLE MASTARM- 12FT | CONTROLLER 332/334 FOUNDATION WITH ANCHOR BOLTS | CONTROLLER CABINET | WIRELESS MODEM | 2"C, TYPE 3 | 3"C, TYPE 3 | No. 8 CONDUCTOR (CU) | No. 6 CONDUCTOR (CU) | No. 8 CONDUCTOR (G) (CU) | 5CSC | 3CSC | DLC | SPAN WIRE- 8MM (7 STRAND) |
|---|---|---|---|---|---|---|---|---|---|---|---|---|---|---|---|---|---|---|---|---|---|---|---|---|---|---|
| | EA | | | | | | | | | | | | | | | | | LF | | | | | | | | |
| E-2 | 1 | | 1 | | 1 | | | | 1 | 1 | | | 2 | | | | | 12 | | 800 | | 400 | | | 180 | 400 |
| E-3 | 2 | | 3 | 1 | 1 | 1 | 3 | 1 | | | | 1 | 6 | 1 | | | | 15 | | 1200 | 840 | 600 | 450 | 520 | 1600 | 650 |
| E-4 | 4 | 1 | 3 | 1 | 1 | 1 | 3 | 1 | | | 1 | 1 | 7 | 1 | 1 | 1 | 1 | 350 | 15 | 1100 | 1100 | 650 | 610 | 550 | 1800 | 350 |
| E-5 | 1 | | 1 | | | | | | 1 | 1 | | | 4 | | | | | 5 | | 850 | | 425 | | | 220 | 415 |

# ELECTRICAL SYSTEMS QUANTITIES

**EQ-1**

STATE OF CALIFORNIA - DEPARTMENT OF TRANSPORTATION
Caltrans ELECTRICAL DESIGN

FUNCTIONAL SUPERVISOR: ALI BAKHDOUD
CALCULATED-DESIGNED BY: BRYAN SABAGQUIT
CHECKED BY: PAUL MATOS
REVISED BY: BS
DATE REVISED: 5-28-21

LAST REVISION 00-00-00
DATE PLOTTED => 8-MAR-2022
TIME PLOTTED => 13:20

| Dist | COUNTY | ROUTE | POST MILES TOTAL PROJECT | SHEET No. | TOTAL SHEETS |
|---|---|---|---|---|---|
| 05 | Mon | RRRR | 1 | 28 | #### |

REGISTERED CIVIL ENGINEER X DATE

MM/DD/YYYY
PLANS APPROVAL DATE

REGISTERED PROFESSIONAL ENGINEER X No. X Exp. X CIVIL STATE OF CALIFORNIA

THE STATE OF CALIFORNIA OR ITS OFFICERS OR AGENTS SHALL NOT BE RESPONSIBLE FOR THE ACCURACY OR COMPLETENESS OF SCANNED COPIES OF THIS PLAN SHEET.

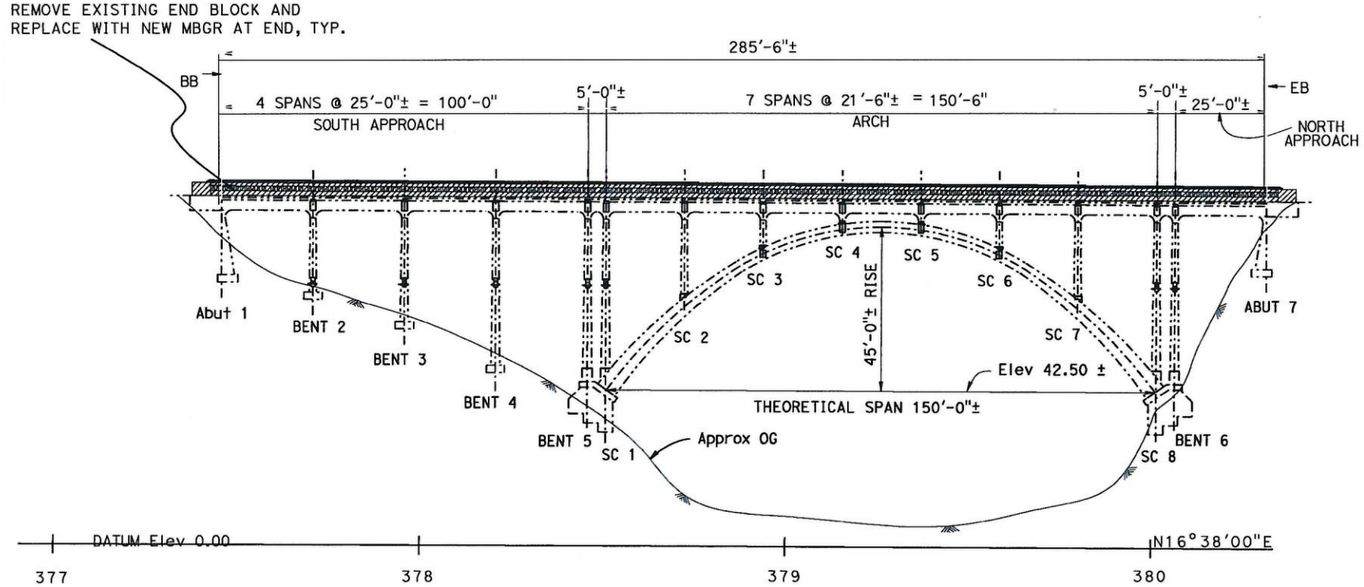


NOTE: SC = SPANDREL COLUMN

## ELEVATION

1" =20'-0"

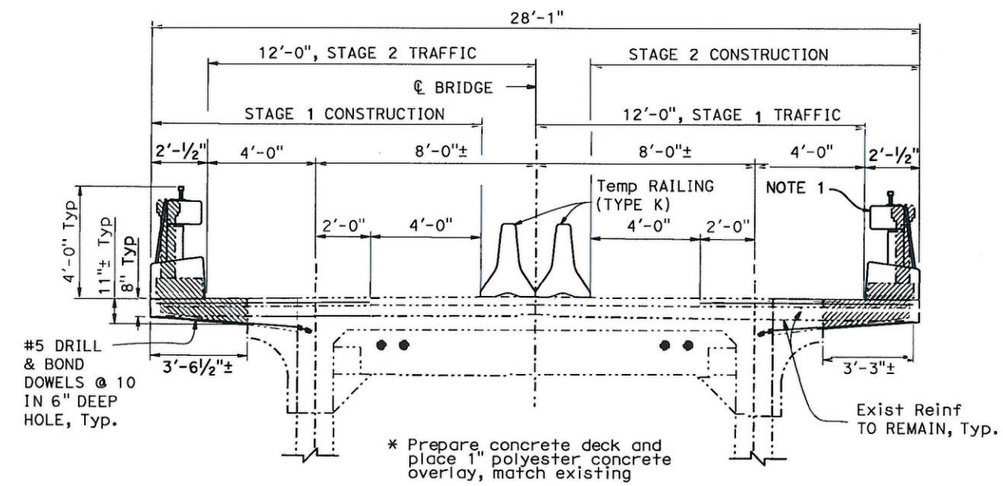


## TYPICAL SECTION - NEW

⅜" = 1'-0"

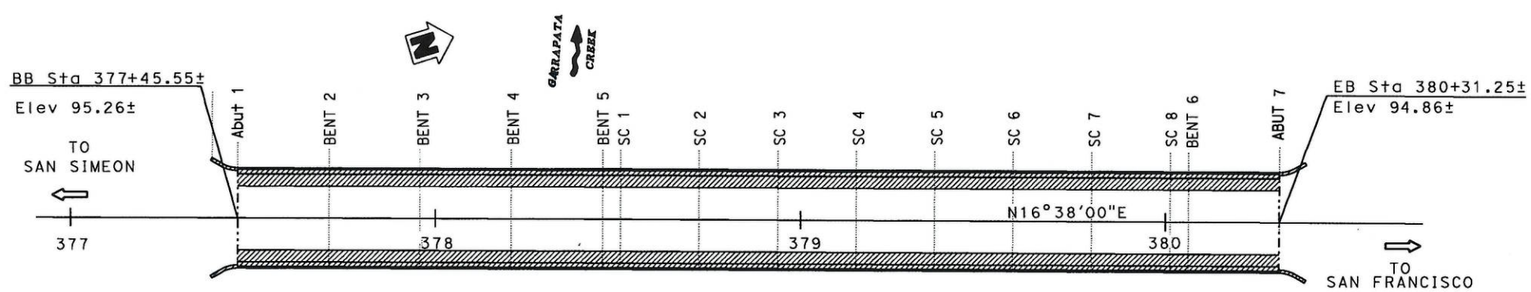


## PLAN

1" = 20'-0"

NOTES :

1. REMOVE EXISTING OVERHANG, CURB AND BARRIER, REPLACE WITH NEW OVERHANG AND BARRIER TYPE 86H OR TEXAS DOT TYPE C412 EXTENDED TO END OF SEISMIC SLABS.
2. BARRIER TYPE 86H SHOWN, TEXAS DOT TYPE C412 SIMILAR, NOT SHOWN, BOTH ARE PENDING APPROVAL.
3. STAGE CONSTRUCTION WITH-ONE WAY TRAFFIC CONTROL WILL BE NECESSARY.
4. PREPARE CONCRETE DECK AND PLACE 1" POLYESTER CONCRETE OVERLAY, AND MATCH EXISTING GRADE, TYP.
5. SCUPPER OR DROP-THRU DECK DRAINS TO BE INSTALLED IN OR NEAR NEW BARRIERS.

LEGEND:

——— INDICATES NEW CONSTRUCTION

-·-·-·- INDICATES EXISTING STRUCTURE

▨ INDICATES REMOVAL EXISTING CONCRETE BARRIER AND OVERHANG

X
BRANCH CHIEF

| | BY | CHECKED | | | |
|---|---|---|---|---|---|
| DESIGN | | X | LOAD & RESISTANCE FACTOR DESIGN | LIVE LOADING X | |
| DETAILS | BY | CHECKED X | LAYOUT | BY X | CHECKED X |
| QUANTITIES | BY X | CHECKED X | SPECIFICATIONS | BY X | PLANS AND SPECS COMPARED X |

STATE OF CALIFORNIA
DEPARTMENT OF TRANSPORTATION

DIVISION OF ENGINEERING SERVICES, STRUCTURE DESIGN
DESIGN BRANCH 18

BRIDGE No. 44-0018
POST MILE X.X

# GENERAL PLAN
## GARRAPATA Cr BRIDGE

STRUCTURES DESIGN GENERAL PLAN SHEET (ENGLISH) (REVISION 12/13/2019)

DATE PLOTTED => 14-FEB-2022 TIME PLOTTED => 12:12
FILE => 44_0018_garrapata crk bridge\SBRNAVBgn> s151020

ORIGINAL SCALE IN INCHES FOR REDUCED PLANS 0 1 2 3

UNIT: 3603
PROJECT NUMBER & PHASE: 0516000163
CONTRACT No.: 44-0018

DISREGARD PRINTS BEARING EARLIER REVISION DATES

REVISION DATES

SHEET X OF X