Exhibit H

This page intentionally left blank.

Supplemental Application Information
Garrapata Creek Bridge Rail Replacement Project (05-1H800)
Combined Coastal Development Permit Application (PLN2200090)
Submitted by Caltrans on August 15, 2022

1. Introduction

A link to the Garrapata Creek Bridge Rail replacement project website is contained below including answers to frequently asked questions:

https://dot.ca.gov/caltrans-near-me/district-5/district-5-current-projects/05-1h800

The list of Frequently Asked Questions (FAQs) and responses are included as Attachment 1.

2. Background and Project Purpose and Need

The project's purpose and need are provided below.

> *Project Purpose*
>
> *This project proposes to upgrade the existing nonstandard bridge railing to current standards in order to ensure the safety and reliability of Highway 1.*
>
> *Project Need*
>
> *The reinforced concrete barrier rail posts have deteriorated along 75% of the left and right barrier rail lengths. Severe cracking with unsound concrete and spalls with exposed rusted rebar have been documented in historic Bridge Inspection Reports.*

In the above purpose and need, "nonstandard" means that the existing bridge railing does not meet current required Caltrans' design standards (see below for details on the applicable design standards).

Specifically, the Garrapata Creek Bridge (No. 44-0018) located on State Route 1 (SR-1) in Monterey County is an open-spandrel arch-type bridge constructed in 1931, and seismically retrofitted in 1998. Currently, portions of the Superstructure and Substructure are undergoing Electrochemical Chloride Extraction, which will help restore the deteriorated concrete in these locations, concrete spall repair, painting of steel elements, and then undergo silane waterproofing treatment. In April 2021, The Caltrans' Headquarters Division of Maintenance-Office of Structure Maintenance and Investigations (SM&I) installed metal beam guardrail to the existing concrete baluster bridge rails as part of an emergency repair (see description of rail damage below).

This project proposes to replace the deteriorated nonstandard concrete baluster bridge rail and approach railing on this structure on both sides of the structure. The rail end posts and barrier rail exhibit fine pattern cracking and are severely deteriorated with concrete spalls resulting in exposed steel reinforcing bars due corrosion caused by exposure to salts in the air, in addition to impact damage.

SM&I is responsible for managing the department's transportation structures. This includes performing bridge inspections on over 26,000 State Highway bridges and bridges owned by local government agencies, making structure work repair recommendations, determining the safe load capacity of all bridges. According to the results of the 2021 Bridge Inspection Report (Attachment 2), the Garrapata Creek Bridge railing is in a "Condition State CS 3" or in a poor condition. The CS can rank range is between 1 – 4: 1=good; 2=fair; 3=poor and 4=severe. When the condition reaches CS4, Severe: "The condition warrants a structural review to determine the effect on strength or serviceability of the element or bridge." As a result of the conclusions of the inspection report(s), and the nature and extent of damage

to the railing, the railing has been deemed "damaged beyond repair" by Caltrans SM&I. Therefore, Caltrans has determined that full replacement of the railing is required.

As stated previously, metal beam guardrail was installed to the existing concrete baluster bridge rails as an emergency repair and they do not follow MASH-compliant Midwest Guardrail System standards which have been rigorously tested and approved.

3. Roles, Responsibilities, and Authority

Caltrans is a department of the California State Transportation Agency and has full possession and control of all state highways and all property and rights acquired for state highway purposes (Section 90, California Streets and Highways Code). Caltrans is authorized and directed to lay out and construct all state highways (Section 90, California Streets and Highways Code) and shall improve and maintain the state highways as provided in the California Streets and Highways Code (Section 91, California Streets and Highways Code). "Caltrans may do any act necessary, convenient or proper for the construction, improvement, maintenance or use of all highways which are under its jurisdiction, possession or control" (Section 92, California Streets and Highways Code). "Caltrans may restrict the use of, or close, any State highway whenever the department considers such closing or restriction of use necessary (Section 124, Streets and Highways Code):

(a) For the protection of the public.
(b) For the protection of such highway from damage during storms or during construction, improvement or maintenance operations thereon."

The Federal Highway Administration (FHWA) is an agency within the U.S. Department of Transportation that supports State and local governments in the design, construction, and maintenance of the Nation's highway system. Through financial and technical assistance, FHWA provides stewardship over the construction, maintenance, and preservation of the Nation's highways, bridges, and tunnels.

A. All-American Road and State Scenic Highway Designations

State Route 1 is designated as an All-American Road and designated as a State Scenic Highway. An All-American Road shall be maintained and operated by Caltrans consistent with the recommendations for context-sensitive design standards relative to aesthetics and safety that are contained in the corridor management plan submitted to the Federal Highway Administration (Section 121, Streets and Highways Code). In addition, for State Scenic Highways, Caltrans shall take into consideration the concept of the 'complete highway,' which is a highway which incorporates not only safety, utility, and economy but also beauty….and shall give special attention both to the impact of the highway on the landscape and to the highway's visual appearance (Section 261, Street and Highways Code).

The Big Sur Coast Highway Management Plan (BSCHMP) was developed in 2004 to serve as the corridor management plan for the All-American Road. The BSCHMP states: "The goal of the CHMP is fully consistent with the Department's priorities as stated in Section 167 of the Streets and Highways Code:

1. Operations, maintenance and rehabilitation of facilities
2. Safety improvements
3. Congestion relief
4. Environmental enhancement and mitigation

Caltrans "is acknowledged to have primary expertise, authority and commitment to pursue the first three priorities on behalf of the state's transportation system. While the Department is also fully committed to environmental enhancement and mitigation in fulfilling its mission and has considerable in-house expertise in this area, it recognizes that environmental resource protection is the primary mission other agencies. Therefore, the primary responsibility and authority for resource protection reside with other state and federal agencies. The Department can most effectively fulfill its responsibility for environmental resource protection through a well-established environmental review program for compliance with all applicable laws and regulations."[1]

Caltrans' design guidelines for historic bridges are contained within the *Guidelines for Corridor Aesthetics* in the *Big Sur Coast Highway Management Plan* as follows:

> *Historic Bridges*
>
> *The concrete arch bridges along Highway 1 are important features of the Carmel-San Simeon Highway Historic District and have been found eligible for listing in the National Register of Historic Places. These bridges, individually and as a cohesive group, are recognized internationally for their aesthetic qualities and engineering design excellence. However, the structures, now over 60* [92] *years old, require ongoing maintenance, repairs, and occasional major upgrades.*
>
> 1. *Should any structural modification be identified as a critical need (such as the seismic retrofit program in the 1990s), the visual design of historic bridges should be changed as little as possible. Necessary modifications should be designed visually as if these features had been incorporated in the bridges as originally constructed.*
> *Note: The seismic retrofit of Bixby Creek bridge completed in the year 2000 exemplifies the value of this guideline and stands as a model for future modifications to Highway 1's historic bridges. The upgrade, which involved retrofitting the bridge deck as a continuous horizontal diaphragm, seamlessly blends the new and the old to leave the aesthetic integrity of the bridge intact.*
>
> 2. *Bridge rails on historic bridges should be repaired or reconstructed to replicate the original rails as closely as possible.*

B. Section 4(f)

Section 4(f) of the Department of Transportation Act of 1966, codified in federal law at 49 United States Code (USC) 303, declares that "it is the policy of the United States Government that special effort should be made to preserve the natural beauty of the countryside and public park and recreation lands, wildlife and waterfowl refuges, and historic sites." Section 4(f) specifies that the [United States] Secretary [of Transportation] may approve a transportation program or project . . . requiring the use of publicly owned land of a public park, recreation area, or wildlife and waterfowl refuge of national, State, or local significance, or land of an historic site of national, State, or local significance (as determined by the federal, state, or local officials having jurisdiction over the park, area, refuge, or site) only if:

- there is no prudent and feasible alternative to using that land; and

[1]California Department of Transportation. 2004. Big Sur Coast Highway Management Plan. March.

- the program or project includes all possible planning to minimize harm to the park, recreation area, wildlife and waterfowl refuge, or historic site resulting from the use.

Section 4(f) properties include:

- Publicly-owned parks, recreational areas, or wildlife or waterfowl refuges; and
- Historic sites on or eligible for the National Register of Historic Places (NRHP) and archaeological sites on or eligible for the NRHP and which warrant preservation in place as determined by Caltrans and the official(s) with jurisdiction.

There are two historic properties located within the Area of Potential Effect (APE) for the Garrapata Creek Bridge Rail Replacement Project: the Garrapata Creek Bridge (Bridge No. 44-0018), which was determined eligible for the NRHP in 1986, and the Carmel-San Simeon Highway Historic District (CSSHHD), which was determined eligible for the NRHP in 1996 with State Historic Preservation Officer (SHPO) concurrence in 2003 and updates in 2006. The Garrapata Creek Bridge is also a contributing resource in the CSSHHD.

FHWA developed five nationwide programmatic evaluations for Section 4(f) properties that may be used for projects designed to improve operational characteristics, safety and/or the physical condition of an existing highway on essentially the same alignment:

- Minor Involvements with Parklands, Recreation Lands, and Wildlife and Waterfowl Refuges;
- Minor Involvements with Historic Sites;
- Historic Bridges;
- Bikeways and Walkways; and
- Net Benefit.

Each of the five programmatic evaluations has its own applicability criteria, alternatives, findings and coordination requirements. According to the Memorandum of Understanding (MOU) dated May 27, 2022 and executed between FHWA and Caltrans (Attachment 3), and 23 U.S.C. 327(a)(2)(B)(i), Caltrans is to assume the responsibility for an action under Section 4(f), 23 U.S.C. 138 and 49 U.S.C. 303 and FHWA's Section 4(f) Regulations at 23 CFR 774.

On April 29, 2021, Caltrans completed and approved a Programmatic Section 4(f) Evaluation for the project pursuant to FHWA's *Programmatic Section 4(f) Evaluation and Approval for FHWA Projects that Necessitate the Use of Historic Bridges* and Section 4(f) (Attachment 4). Caltrans has determined that there is no feasible and prudent avoidance alternative to the preferred alternative for the project, and made findings as such in the Programmatic Section 4(f) Evaluation. The Programmatic Section 4(f) Evaluation for the project is retained in the project file as a matter of public record and is contained in Attachment 5.

C. Summary

Under the FHWA Programmatic Section 4(f) for Historic Bridges (Attachment 4), coordination with the "official with jurisdiction over the Section 4(f) property" is required; no other agency coordination is required. In the case of historic properties, the "official with jurisdiction" is the SHPO for the state wherein the property is located. Caltrans completed compliance with Section 106 and Section 4(f)

through consultation with SHPO and through issuance of a Memorandum of Agreement with SHPO for the project.[2] Therefore, Caltrans has completed the Section 4(f) and Section 106 processes for the project.

In addition, in compliance with Sections 121 and 261 of the California Streets and Highways Code for All-American Roads and State Scenic Highways, through the design process, consultation with the SHPO, and continued public outreach and involvement, Caltrans continues to be committed to using context-sensitive design standards, and to follow the design guidelines for historic bridges identified in the *Guidelines for Corridor Aesthetics* in the *Big Sur Coast Highway Management Plan* to the maximum extent, while balancing the number one goal and mandate of Caltrans, to ensure public safety.

4. Applicable Design Standards

FHWA establishes design standards for the National Highway System. The FHWA has designated the following ten controlling criteria for projects on the National Highway System as comprehensive design standards which cover a multitude of design characteristics, allowing flexibility in application:

- Design Speed
- Lane Width
- Shoulder Width
- Horizontal Curve Radius
- Superelevation Rate
- Stopping Sight Distance
- Maximum Grade
- Cross Slope
- Vertical Clearance
- Design Loading Structural Capacity (non-geometric)"[3]

Caltrans establishes design standards for the State Highway System. Caltrans established design criteria and policies in the *Highway Design Manual* to provide a guide for the engineer to exercise sound judgement in applying standards. Caltrans' design standards revolve around FHWA's controlling criteria, however, they have evolved over time to more fully consider adjacent community values, local decisions making, and area context."[4] Caltrans does not have a "historical exemption" in its design standards nor does Caltrans have "historic preservation building standards."[5]

The American Association of State Highway and Transportation Officials (AASHTO) is a nonprofit, nonpartisan association representing highway and transportation departments in the 50 states, the District of Columbia, and Puerto Rico. AASHTO serves as a liaison between state departments of transportation and the Federal government. AASHTO is an international leader in setting technical standards for all phases of highway system development. Standards are issued for design, construction of highways and bridges, materials, and many other technical areas. AASHTO policies and standards, are established as nationwide standards, but do not always satisfy California conditions. When standards differ, the

---

[2] The Section 106 Programmatic Agreement among FHWA, SHPO, and Caltrans streamlines the required consultation processes for both Section 106 and Section 4(f).

[3] California Department of Transportation. 2020. *Highway Design Manual*. Section 82.1(3), Highway Design Manual Standards. Page 80-7. July 1.

[4] California Department of Transportation. 2020. *Highway Design Manual*. Section 81.6, Design Standards and Highway Context. Page 80-6. July 1.

[5] The California Building Code, including the California Historical Building Code (California Code of Regulations, Title 24), only applies to occupancies (i.e., occupied buildings or properties) in the State of California and does not govern the design standards of bridges on State Highway Systems.

instructions in the *Highway Design Manual* govern, except when necessary for FHWA project approval.[6] However, the proposed project is not among the types of projects requiring FHWA approval.

Section 208.10 of the *Highway Design Manual* addresses the design standards for bridge railing and stipulates that "The barrier separation type and the bridge rail selection requires approval by the District Traffic Engineer or designee."[7] In addition to the design standards in the Highway Design Manual, Design Information Bulletins establish policies and procedures for the various design specialties of the Department that are in the Division of Design. In 2019, Design Information Bulletin 79-04 states the following regarding bridge railing[8]:

> *3.2.8.3 Bridge Rail and Other Structure Improvements*
>
> *Departmental Policy (Structures Maintenance and Investigations Policy and Procedures Memo Number 2003.1) states that the upgrade of bridge rail classified as not meeting currently acceptable standards will be made on a Department-wide programmatic basis for all bridges on the State highway system. On 3R projects, bridge rail within the project limits that does not meet MASH 2016 criteria (or the latest crashworthiness criteria adopted by Caltrans) are to be identified during the project's Safety Screening and considered for upgrading or replacing by the project depending on district target levels and funding availability. This need should be identified early on during the project development process when scoping the 3R project. The Office of Structure Design Technical Liaison Engineer should be contacted to discuss the need, if any, to upgrade the bridge rails within the project limits and any other structure improvements identified in the Structures Replacement And Improvement Needs (STRAIN) Report.*

Caltrans' District Traffic Safety Engineers utilize the *Traffic Safety Systems Guidance* which states "At the time of publication, which is October 31, 2019, is when all bridge rails will be to MASH standard."[9]

The Manual for Assessing Safety Hardware (MASH) is a nationwide standard that was implemented by FHWA and AASHTO in 2009 and updated in 2016. MASH sets the standards for highway safety equipment, including bridge rails, guardrails, and other safety features. Newly adopted MASH standards have mandated that all new installations of roadside safety devices on high-speed roadways, including bridge railing, must meet a new higher standard for crash testing for all projects implemented. As of December 31st, 2019, Caltrans requires that bridge rails comply with MASH standards without exception. A copy of the 2019 MASH implementation memo is included as Attachment 6 and the following link provides more details on Caltrans' compliance with MASH standards: https://dot.ca.gov/programs/safety-programs/mash. The Caltrans' *Traffic Safety Systems Guidance* further states "In accordance with the MASH Implementation memo, once a large enough section of the existing system is damaged and requires a project to replace the system, only Caltrans approved MASH safety systems will be allowed on California State Highways."[10] Because State Route 1 is a two-lane highway with a posted speed limit of 55 miles per hour, the new bridge railing for the Garrapata Creek Bridge must meet the MASH crash test

---

[6]California Department of Transportation. 2020. *Highway Design Manual*. Index 108.7, Coordination with the FHWA. Page 100-23. July 1.

[7] California Department of Transportation. 2020. *Highway Design Manual*. Section 208.10(2), Bridge Barriers and Railings. Page 200-50. July 1.

[8] California Department of Transportation. 2019. *Design Guidance and Standards for Major Pavement Roadway Rehabilitation Projects*. Design Bulletin 79-04. October 2.

[9] California Department of Transportation 2019. *Traffic Safety Systems Guidance*. Page 15. March.

[10] California Department of Transportation 2019. *Traffic Safety Systems Guidance*. Page 8. March.

level 4 (TL-4) design specifications as explained in more detail below under section 6, Design Constraints, below.

In a memo dated March 17, 2017 on *Clarification of Roles and Responsibilities in Implementing the American Association of State Highway and Transportation Officials (AASHTO)/Federal Highway Administration (FHWA) Joint Implementation Agreement on the AASHTO Manual for Assessing Safety Hardware (MASH)* (see Attachment 7), the memo states that the AASHTO Technical Committee for Roadside Safety (TCRS) will continue to be responsible for developing and maintaining the evaluation criteria adopted by AASHTO, FHWA will continue its role in issuing letters of eligibility of roadside safety hardware for federal-aid reimbursement, and the memo then states, "It is the States' responsibility to determine whether or not to use a particular hardware device and how to use it for their particular situation."

The Caltrans District 5 Traffic Safety Engineer has made the determination that he will not be recommending an exception to the MASH standard for the new bridge railing for the Garrapata Creek Bridge.

5. Alternatives Analysis

Though the project purpose is to replace the existing concrete baluster bridge rails and approach rails with new railing that meets current MASH standards, Caltrans is committed to choosing a new MASH-compliant railing that is context-sensitive and will be compatible with the historic character of the Garrapata Creek Bridge and the CSSHHD. Caltrans' Structures Design Engineers developed a new bridge rail that is designed specifically to replicate the design of the historic rails as closely as possible while also meeting the new MASH crashworthiness standards (the new Caltrans rail design Type 86H). Caltrans' design engineers, landscape architects, and architectural historians utilized a number of Caltrans and AASHTO guidance documents on historic preservation when considering and developing the proposed design for the Garrapata Creek Bridge railing. The ultimate design was also developed from extensive public comment, including from the Aesthetic Design Advisory Committee (ADAC) who selected the Type 86H design option (see more details under public outreach below). Great attention to detail has been given to the design to match the existing railing to the maximum extent possible. For example, in response to public input, 2-inch chamfers were added to the balusters to enhance public views through the openings between the balusters.

The proposed MASH-compliant TL-4 concrete baluster style bridge rail Type 86H has been crashed tested and has passed all required crash tests.

A. Development of Project Alternatives

On October 29, 2020, the following excerpted comments were received from Monterey County Historic Resources Review Board (HRRB) requesting the following information:

- *"An in-depth review and discussion with FHWA on consideration of historic architecture as a means to compliance with MASH and AASHTO standards;*
- *Details on the condition of the existing bridge rails, including photographic evidence;*
- *Review of Highway speeds and potential reduction of speed for each bridge as a means of providing flexibility in design solutions for reinforcement, replacement in kind, or design of the replacement rails (if needed); and*
- *A detailed discussion of why typical historic preservation building standards are not possible in this situation with documentation of efforts*

on coordination with FHWA and highway speeds."

As a result of these comments as well as other public comments received on the project, and in compliance with Section 4(f) requirements, Caltrans considered the following alternatives below. A summary of the public outreach completed on the project is also contained below.

B. Alternatives Considered but Eliminated from Further Discussion

Repair of the railing rather than replacement was not identified as a feasible alternative, because the railing was determined to be "damaged beyond repair" in Inspection Reports (as described above). In addition, any repairs would need to comply with MASH standards and would be required to be crash tested.

Installation of a façade or treatment that replicates the existing railing in front of a MASH-compliant railing was also not identified as a feasible alternative because there is not enough room on the bridge and would require widening of the bridge by at least two feet (see below).

Lowering the Speed Limit

At the request of the public as well as the Monterey County Historic Resources Review Board (HRRB), one alternative was evaluated to determine if State Route 1 could be reduced to a speed limit of 45 miles per hour rather than the existing speed limit of 55 miles per hour. If the roadway speed limit could be reduced to 45 miles per hour, a bridge railing following the Test Level 2 (TL-2) MASH standard could be installed versus a TL-4 MASH standard required for roadways posted at greater than 45 miles per hour. Specifically, a TL-2 MASH standard allows for construction of the Caltrans' standard C411 rail design. In an October 29, 2020 letter, the HRRB commented that the Caltrans' standard C411 rail design "appears to be the most consistent option at this time."

The California Vehicle Code establishes speed limits for roadways. California Vehicle Code Section 22349(b) sets the speed limit on a two-lane undivided highway at 55 miles per hour. However, California Vehicle Code Section 22358 establishes that Caltrans is responsible for setting speed limits on the State Highway System. California Vehicle Code Section 22354 allows Caltrans to reduce speed limits on the State Highway System by completing an "engineering and traffic survey" and based upon the results of this survey, making findings that the reduction in speed limit is "most appropriate to facilitate the orderly movement of traffic and is reasonable and safe" following the *California Manual for Setting Speed Limits*[11]. The *California Manual for Setting Speed Limits* states that the speed at which the 85th percentile of drivers is traveling should be used to establish the speed limit. Caltrans performed a speed survey for the Garrapata Creek Bridge and found that the 85th percentile of drivers are traveling at 58 miles per hour. The results of the speed survey are contained in Attachment 8 and frequently asked questions on how speed limits are set are contained in Attachment 9. Therefore, Caltrans cannot make findings to reduce the speed limit to 45 miles per hour at the Garrapata Creek Bridge. Furthermore, the 2020 *California Manual for Setting Speed Limits* cites studies (such as FHWA-RD-92-084 and FHWA-RD-98-154) that show that establishing a speed limit at less than the 85th percentile generally results in an increase in collision rates.

Two-Foot Widening of the Bridge and New Bridge Alignment

Widening of the shoulders on the Garrapata Creek Bridge by 2 feet on both sides was rejected by Caltrans due to engineering constraints. Construction of a new bridge on a new alignment in order to leave the historic structure in place was also rejected due to engineering constraints.

C. Alternatives Evaluated in the Project Environmental Impact Report

---

[11] California Department of Transportation. 2020. *California Manual for Setting Speed Limits.* Division of Traffic Operations. February.

Design Variation Using the Type C412 Railing

A second new rail design variation developed by the Texas Department of Transportation to replicate historic bridge rail designs (Type C412) was presented in the EIR for the project as a design option. However, since certification of the EIR, this design option has been rejected due to public comment at six Aesthetic Design Advisory Committee (ADAC) meetings held (see below for a summary of public outreach efforts).

6. Design Constraints

Bridge railings are designed to redirect a vehicle.[12] Per the MASH manual,[13] MASH TL-4 bridge rails must meet the following design specifications:

- The minimum bicycle railing height must be 42"; the minimum vehicular height must be 36"; and
- Clear openings in the bridge rail cannot let a 6" sphere pass through in the lower 27" of height, and cannot let an 8" sphere pass through above the 27" height.

FHWA's publication "Flexibility in Highway Design"[14] states that "When designing a bridge, designers can either choose to use a bridge railing that has already been designed and crash tested, or they can design a new one and have it crashed tested."[15] Based upon the required specifications above, Caltrans' Design Engineers and Caltrans Traffic Safety Engineers developed the Type 86H bridge railing to best approximate the appearance of the existing bridge railing while meeting the above requirements. The proposed rail design has several similarities with the original bridge rails: the overall height of the rails is 42 inches, the rails contain arched window openings, and the rails are composed of reinforced concrete. The differences in the rail design are in the dimensions of the balusters, window openings, base, and top rail. Since the open windows in baluster-style rails can be "catch points," where vehicles' bumpers can potentially catch on the rails, which could cause or worsen accidents, current safety standards require a higher base height, thickness, and top rail thickness to accommodate modern vehicle designs and speeds. The increased height of the base of the rails and at the base of the window openings provides the rail with the ability to withstand and deflect vehicle impacts. While the lines and shapes are similar in the proposed new rails, the arched window openings are shorter in height and narrower in width, and the balusters are wider and have greater thickness (depth).

The Type 86H rail would be constructed with reinforced concrete and steel reinforcement. An exact comparison of the dimensions of the proposed railing to the existing railing are presented in the table below (these details are also provided in Table 1-1 of the Final Environmental Impact Report for the project).

Element	Original Rail (in inches)	Type 86H (in inches)	Change in Appearance
Rail height	42"	42"	None
Arch window height (to top of arch)	20"	15.125" at traffic face of baluster; 16.125" at back side of baluster	Reduction in arch window height by 4.875" at traffic face & 3.875" at back side

[12] California Department of Transportation. 2019. *Traffic Systems Safety Guidance*. Page 13. March

[13] American Association of State Highway and Transportation Officials (AASHTO). 2016. *Manual for Assessing Safety Hardware*. Second Edition.

[14] California Department of Transportation. 2020. *Highway Design Manual*. Section 81.6, Design Standards and Highway Context. Page 80-6. July 1.

[15] Federal Highway Administration. No date. *Flexibility in Highway Design*. Chapter 7, Bridges and Other Major Structures. Page 101.

Arch window width	10” (squared edges)	6” (1.5” chamfered edges to increase view through window)	Reduction in arch window width by 4”
Baluster length (parallel to traffic)	6”	6”	No change
Baluster width (depth) transverse to traffic	5”	7.5”	Increase in baluster width by 2.5”
Base height of curb at traffic face	9”	18”	Increase in base height by 9”
Base width (depth) of baluster rail on bridge	21”	24.5”	Increase in base width by 3.5”
Height at base of arch windows (above bridge deck/Finish Grade [FG])	12”	18”	Increase in height of base at arch windows by 6”
Top rail height	9”	10”	Increase in top rail height by 1”
Top rail width (depth) transverse to traffic	10”	16.25”	Increase in top rail thickness by 6.25”

In order to meet MASH TL-4 criteria, Caltrans has determined that the proposed dimensions of the Type 86H railing are constrained by the required MASH specifications.

7. Design Opportunities

While the proposed dimensions of the Type 86H railing are required in order to meet MASH standards, the color of the railing can be flexible (i.e., the dye is used to generate the concrete color). It is the hope and intent of Caltrans to work with Monterey County staff and decision-making bodies, as well as the public, to determine the color that best preserves the visual character and historic significance of the railing. Initial visual simulations have been prepared to provide a starting point for discussions regarding color as shown in Attachment 10 along with a side-by-side cross section comparison of the existing and proposed railing detail contained in Attachment 11. Additional visual simulations can be generated based upon input and discussion in the upcoming public forums.

8. Summary of Public Outreach Efforts

Over the past two and a half years, Caltrans has conducted extensive public outreach to notify the public of the purpose and need for the project, and to solicit input on the design of the railing. This included formation of an Aesthetic Design Advisory Committee (ADAC) to solicit additional detailed comments from professionals in historic preservation. A summary of the efforts completed to date are provided below. In addition, Caltrans’ public outreach documentation is contained in Attachment 12 and the list of attendees at the ADAC meetings, the ADAC attendance record, and meeting notes are contained in Attachments 13, 14, and 15 respectively.

- Caltrans contacted The Monterey County Historic Resources Review Board (HRRB) for comment on the project on August 31st, 2020. The organization added the Garrapata Creek Bridge Rail Replacement Project (05-1H800) to their agenda for their October 1st, 2020 meeting. PQS Principal Architectural Historians Lindsay Kozub and Daniel Leckie both attended the meeting, presenting the project to the board and answering questions from the public. The board responded with concerns in regard to the project and will be drafting formal comments to be included in the public record in the near future.

- Caltrans PQS Principal Architectural Historian Daniel Leckie reached out to the following organizations by email and postal mail on August 31st , 2020 requesting comment by October 5th, 2020 and followed up with an email reminder about the approaching comment period deadline on September 21st, 2020.
    - The Historic Bridge Foundation: Executive Director Kitty Henderson responded to Caltrans request on September 21st, 2020 commenting that the organization did not have enough information about the project or resources within the APE to provide a comment. PQS Principal Architectural Historian Daniel Leckie spoke with Ms. Henderson on the phone and committed to providing more information about the project, forwarding the organization additional images, renderings, DPR 523 forms, and the Programmatic Agreement. To date Caltrans has not received any additional comment from this organization.
    - The Monterey County Historical Society: Executive Director James Perry responded to Caltrans' follow up request on September 22nd, 2020 expressing that the Historical Society did not have concerns with the project.
    - The Carmel Heritage Society: Caltrans has not received any comments from this organization to date.
    - The Big Sur Historical Society: Mary Trotter of the Big Sur Historical responded to the follow up request on September 28th, 2020 expressing concerns with the project.
- A Youtube video released in November 2020;
- The Draft EIR circulated for public comment and posted on the Caltrans' project website in November 2020;
- A Public Hearing was held on Draft EIR in December 2020;
- Over 70 comment letters were received on the Draft EIR for the project in January 2021;
- A Final EIR was certified and published on the Caltrans' website in May 2021 which included responses to public comments; and
- Aesthetic Design Advisory Committee (ADAC) was created comprising selected community and agency representatives who have an interest in the project's appearance; six design charrettes meetings were held from October 2021 to February 2022 (October 5, 2021; October 26, 2021, November 16, 2021, December 7, 2021, January 11, 2022, and February 22, 2022). A list of participants is contained in Attachment 13 and the attendance record is contained in Attachment 14).

List of Attachments

Attachment 1 Frequently Asked Questions (FAQs) for the Project
Attachment 2 2021 Bridge Inspection Report
Attachment 3 Section 4(f) MOU between Caltrans' and FHWA
Attachment 4 FHWA Programmatic Section 4(f) for Historic Bridges
Attachment 5 Programmatic Section 4(f) Evaluation for the Project
Attachment 6 2019 MASH Implementation Memo
Attachment 7 MASH Roles and Responsibilities Memo
Attachment 8 Speed Study Results
Attachment 9 FAQS on Setting Speed Limits
Attachment 10 Visual Simulations
Attachment 11 Visual Cross Section Comparison
Attachment 12 Caltrans' Public Outreach Documentation
Attachment 13 List of Participants in Aesthetic Design Advisory Committee (ADAC) Meetings
Attachment 14 ADAC Attendance Record
Attachment 15 ADAC Meeting Notes

Attachment 1
Frequently Asked Questions (FAQs) for the Project

Big Sur and Garrapata Creek Bridge Rail Replacement Project

Frequently Asked Questions

Why are there only two rail types available to choose from?

The design of the replacement bridge rails would be consistent with the character of the existing bridges and complement the aesthetics of the rural coastal setting. The replacement bridge rails would have slightly different dimensions than the existing rails. The new rails would be designed to match the existing visual character of the bridges and the corridor, but they would not be an exact in-kind replacement. Caltrans has developed a context sensitive MASH-compliant rail for the Garrapata bridge rail replacement and the historic Big Sur bridges.

An open-style bridge rail that maximizes openness to the greatest extent possible would be used and would include the smallest end blocks possible that meet safety needs. The intent is to balance respect for historic design themes with safety and the best of contemporary structural expression.

The Texas Department of Transportation has developed a MASH-compliant rail that Caltrans is evaluating for use within the state of California. The rail has successfully passed crash testing criteria and looks similar to the original Big Sur historic bridge rails.

Why can't the rail be replaced in kind or a Design Exception be granted?

The current MASH standards require more structural steel to withstand vehicular impacts, and require fewer snagging hazards for errant vehicles than the original rail that was designed in the 1930's. Also, current bicyclist standards require each clear opening between balusters to be narrower than those on the original rail. Further, the Guidelines for the Corridor Aesthetics element of the Coast Highway Management Plan state: "new... should be authentic in design, rather than emulate something they are not, i.e., historic bridges. At the same time, structural designers should recognize historic bridges for the quality of aesthetic and engineering excellence they represent and strive to match or exceed this quality in contemporary terms."

A Design Exception cannot be granted for this project as new safety hardware/equipment for projects cannot be approved regardless of context of the historic or aesthetic environment.

What other rail types were considered?

Caltrans will choose a new MASH-compliant railing that is both context sensitive and compatible with the historic and visual resources of the Big Sur bridges and the Carmel-San Simeon Highway Historic District. Bridge railings and barriers in the Coastal Zone present a distinct set of challenges, largely because of visual protections established by the Coastal Act as well as federal highway structural design standards. These challenges led to the development of Caltrans' and the California Coastal Commission's Bridge Rails and Barriers: A Reference Guide for Transportation Projects in the Coastal Zone. This guide was prepared as a tool to help stakeholders and participants in bridge and railing design better understand the options available

for potentially successful application in future projects within the Coastal Zone. While bridge rails that meet MASH compliance exist, Caltrans opted to develop one specific to the Big Sur historic bridge corridor that maximizes openness and the historic appeal.

What future opportunities will there be for the public to provide input on the two rail types?

In addition to the public outreach and subsequent comments received during the draft environmental document circulation and comment period, Caltrans is committing to present the two bridge rail options to the Big Sur community in the beginning of 2022. This will allow time for full testing and analysis of the bridge rails prior to their debut. From now until that time, Caltrans will investigate the best forum for the outreach event. This might be at an existing Big Sur Byway Organization meeting, a Big Sur Multi-Agency Advisory Council meeting, a Land Use Advisory meeting, or a one-time special event separate from these meetings. Furthermore, Caltrans will be soliciting input from the public on which rail type is preferred as well as input on bridge aesthetics related to rail color, rail opening dimensions and design. The public could also provide input during the coastal development permit process.

Why are the rails being replaced?

The existing railing on all six bridges no longer meet current state and federal safety standards. Furthermore, the existing bridge rails are displaying significant deterioration. The Manual for Assessing Safety Hardware (MASH), implemented as an agreement between the Federal Highway Administration and the American Association of State Highway Transportation Officials in 2009 (updated in 2016), sets the standards for highway safety equipment. MASH was subsequently implemented by the California Department of Transportation (Caltrans).

Can the speed limit be reduced?

No. Caltrans looked at the option of lowering the speed limit through the project area to 45 miles per hour to accommodate an in-kind bridge rail replacement. A speed zone survey of Highway 1 in the Garrapata Bridge area was completed in December 2019. The results of the survey showed 85 percent of vehicles were travelling at speeds above the posted 55 miles per hour speed limit. The analysis of the survey determined reducing the speed limit could not be justified.

For more information, please refer to Section 1.7.2 of the Big Sur Bridge Rail Replacement/Garrapata Creek Bridge Rail Replacement final environmental document.

Attachment 2
2021 Bridge Inspection Report

California Department of Transportation
Division of Maintenance

Structure Maintenance and Investigations

BRIDGE

INSPECTION

RECORDS

INFORMATION

SYSTEM

The requested documents have been generated by BIRIS.

These documents are the property of the California Department of Transportation and should be handled in accordance with Deputy Directive 55 and the State Administrative Manual.

Records for “Confidential” bridges may only be released outside the Department of Transportation upon execution of a confidentiality agreement.

BRIDGE INSPECTION REPORT
Routine Inspection

BRIDGE NO.:	STRUCTURE NAME:	INSPECTION DATE:
44 0018	**GARRAPATA CREEK**	**July 22, 2021**

BRIDGE LOCATION INFORMATION

(9) LOCATION	05-MON-001-62.97	(7) FACILITY CARRIED			STATE ROUTE 1
(11) POSTMILE	62.97	(6) FEATURE INTERSECTED			GARRAPATA CREEK
(16) LATITUDE	36°25'00.59"	(5) INVENTORY RTE(ON/UNDER)	ON		131000010
(17) LONGITUDE	121°54'50.18"	(104) ON NATIONAL HIGHWAY SYSTEM			NOT ON NHS

STRUCTURAL HEALTH CONDITION SUMMARY INFORMATION

(58) DECK	7 GOOD	DECK AREA $(M)^2$			731
(59) SUPERSTRUCTURE	5 FAIR	SUFFICIENCY RATING			48.3
(60) SUBSTRUCTURE	5 FAIR	PAINT CONDITION	SUPER N/A	SUBSTR	N/A
(62) CULVERT	N N/A (NBI)	STRUCTURALLY DEFICIENT (SD) STATUS			NOT SD
(67) STRUCTURE EVALUATION	5 ABOVE MIN TOLERABLE	(113) SCOUR			9 ON DRY LAND

PHOTOGRAPH IDENTIFICATION

Routine-Roadway View (07/24/2017)

Routine-Elevation View (07/24/2017)

Routine-Underside View (07/24/2017)

Routine-Map View (09/21/2021)

TEAM LEADER	Chris V. Udarbe
REPORT AUTHOR	Chris V. Udarbe
INSPECTED BY	CV.Udarbe/AW.Corker

C. V. Udarbe — 10/19/2021

Chris V. Udarbe (Registered Civil Engineer) — Date

REGISTERED PROFESSIONAL ENGINEER
Chris V. Udarbe
No. 62985
Exp. 06/30/2022
CIVIL
STATE OF CALIFORNIA

STRUCTURE OVERVIEW

AGENCY INFORMATION

(1) STATE NAME	CALIFORNIA 069
(2) HIGHWAY DISTRICT	05
(3) COUNTY CODE	(44)MONTEREY
(4) PLACE CODE	(00000) _____
(21) MAINTAIN	01 STATE HIGHWAY AGENCY
(22) OWNER	01 STATE HIGHWAY AGENCY
(98) BORDER BRIDGE STATE CODE	N/A % SHARE N/A
(99) BORDER BRIDGE STRUCTURE NUMBER	N/A

INSPECTION INFORMATION

(90) INSPECTION DATE	07/21	(91) FREQUENCY	24 MO
(92) CRITICAL FEATURE INSPECTION		(93)	CFI DATE
A) FRACTURE CRITICAL INSP	N-NO	MO A)	N/A
B) UNDERWATER INSP	N-NO	MO B)	N/A
C) OTHER SPECIAL INSP	N-NO	MO C)	N/A

CONSTRUCTION INFORMATION

(27) YEAR BUILT	1931	(45) MAIN SPANS	1	(43a) STRUCTURE TYPE MAIN	2: CONCRETE CONT
(106) YEAR MODIFIED	N/A	(46) APPR SPANS	5	(43b) DESIGN TYPE MAIN	11: ARCH - DECK
(34) SKEW	0	(48) MAX SPAN (M)	45.9	(44a) STRUCTURE TYPE APPR	2: CONCRETE CONT
(49) LENGTH (M)	87	(35) STR FLARE	0-NO	(44b) DESIGN TYPE APPR	04: TEE BEAM
(112) NBIS BR LENGTH	Y	JOINTS	0	NO. OF HINGES	0

STRUCTURE DESCRIPTION

Original Structure (1931):
Approach Spans (Spans 1-4 and 6) - Simple RC T-beams (2) with RC deck on RC cap and RC column (2) bents with RC cap and RC column (2) abutments with a rubble masonry bulkhead at Abutment 7. Founded on spread footings.

Main Span (Span 5) - RC open-spandrel arch (2 ribs) supporting an RC T-girder (2) and RC deck with RC integral floor beams (8).

Repair (1980): Spall repair was conducted on various elements throughout the length of the structure. Additionally, all concrete surfaces below the deck soffit were cleaned and sealed.

Seismic Retrofit (1987): Longitudinal restrainer cables were installed between Bent 5 and Spandrel Column 1 as well as between Spandrel Column 8 and Bent 6.

Repair (1993): All concrete surfaces were cleaned and sealed (except the top surface of the deck and both bridge rails). Additionally, cracks were epoxy injected.

Seismic Retrofit (1998): The superstructure was post tensioned which included a partial removal of the original abutments (top section) and the addition of a new abutment support (RC anchor block) with CIDH piles at both abutment locations. A PTFE bearing was installed at the top of both columns at each abutment. The deck expansion joints throughout the length of the structure were fully grouted. The existing transverse restrainer cables at Bent 5 and 6 were removed. A transverse RC shear key wall was placed at Spandrel Columns 4 and 5 in Span 5 which included the placement of a PTFE bearing at the bottom of both columns at both location. A partial height RC column casing was placed on the top and bottom of both columns at Spandrel Columns 2. The arch rib strut at Spandrel Columns 3 and 6 was removed and replaced.

SPAN CONFIGURATION

4 @ 25.0 ft, 1 @ 150.5 ft, 1 @ 25.0 ft

OPERATIONAL INFORMATION

LOAD CAPACITY

(31) DESIGN LOAD	0 UNKNOWN	(65) CALC METHOD	8 LRFR RATING FACTOR
(66) INVENTORY RATING	RF= 0.77	(63) CALC METHOD	8 LRFR RATING FACTOR
(64) OPERATING RATING	RF= 1.00	(70) BRIDGE POSTING	5 AT/ABOVE LEGAL LOADS
(41) STRUCTURE STATUS	A-OPEN, NO RESTRICTION	PERMIT RATING	PPPPP
OVERLAY THICKNESS	1 inches		

POSTING LOADS

	Safe Loads	Existing Ordinance/Order	Posting Signs	
Type 3	Legal	N/A	N/A	U.S. Tons
Type 3S2	Legal	N/A	N/A	U.S. Tons
Type 3-3	Legal	N/A	N/A	U.S. Tons
Speed	55	N/A	N/A	MPH

Additional Ordinance/Order Requirements

NONE

Additional Signs

NONE

Posting Date	N/A
Load Rating Summary Date	09/11/17
Load Rating Type	Calculated
Load Rating Tool - Date	BrR 6.8.2 AASHTO, Hand Calcs - 08/30/17

MINIMUM VERTICAL CLEARANCE

(53) MIN VERT CLEAR OVER BRIDGE RDWY		Unimpaired
(54) MIN VERT UNDERCLEAR REF	N-NOT H/RR	0.00 M

MINIMUM LATERAL UNDERCLEARANCE

(55) MIN LAT UNDERCLEAR RT REF	N-NOT H/RR	0.0 M
(56) MIN LAT UNDERCLEAR LT		0.0 M

CONDITION INFORMATION

INSPECTION COMMENTARY

SCOPE AND ACCESS

Water up to 6 inches deep was flowing under Span 5 during this inspection. No elements were in contact with water and a complete inspection was performed from the deck and ground. The superstructure and substructure elements were viewed with the assistance of binoculars while standing in the ravine beneath all spans of the structure as well as looking over either edge along the length of the bridge. A UBIT is required to conduct a close up inspection of the superstructure and substructure elements due to the height of the structure, the severity of the slope beneath the structure, as well as the presence of numerous spalls and delaminations throughout the structure.

A supplemental UBIT inspection was conducted on 09/01/2021 to more closely inspect the underside superstructure and substructure elements of the bridge as an extension of the routine inspection dated 07/22/2021. Access was provided by the UBIT (Aspen A-75), and in some locations binoculars were used as a visual aid. A complete inspection of these elements was performed. The UBIT was operated by Mr. Eric Trejo and deployed off the right side of the structure. See attached Photo 1. Lane closures and traffic control were provided by the District 5 Roadway Maintenance Crew. Additional findings from the previous 2018 UBIT inspection are documented in the 09/18/2018 Other - Partial Inspection Report and summarized in the report's attached Element Table.

MISCELLANEOUS

A routine map view of the bridge site is included with this report. See attached Photo 2.

SPECIAL INSPECTION INFORMATION

STEEL INVESTIGATION DETAILS - NOT APPLICABLE FOR THIS BRIDGE.

UNDERWATER INVESTIGATION DETAILS - NOT APPLICABLE FOR THIS BRIDGE.

DECK AND ROADWAY

DECK CROSS SECTION

1.00 ft br, 0.75 ft cu, 24.00 ft, 0.75 ft cu, 1.00 ft br

DECK GEOMETRY

(49)	LENGTH	87.0 M
(51)	NET WIDTH	7.3 M
(52)	TOTAL WIDTH	8.4 M
(50)	CURB OR SIDEWALK	LEFT 0.2 M RIGHT 0.2 M
(32)	APPROACH RDWY WIDTH	7.3 M
(33)	BRIDGE MEDIAN	0 NO MEDIAN

DECK STRUCTURE INFORMATION

(107)	DECK STRUCTURE TYPE	1-CIP CONCRETE
(108)	WEARING SURFACE / PROTECTIVE SYSTEM	
A)	TYPE OF WEARING SURFACE	2-INTEGRAL CONC.
B)	TYPE OF MEMBRANE	0-NONE
C)	TYPE OF DECK PROTECTION	0-NONE
	OVERLAY THICKNESS (inches)	1 inches
(29)	AVERAGE DAILY TRAFFIC	4300
(30)	YEAR OF ADT 2009	(109) TRUCK ADT % 0 %
(19)	BYPASS, DETOUR LENGTH	199 KM
(114)	FUTURE ADT	3124
(115)	YEAR OF FUTURE ADT	2041
(37)	HISTORICAL SIGNIFICANCE	2: ELIGIBLE FOR NRHP

DECK ROADWAY/OPERATIONAL INFORMATION

(42a)	TYPE OF SERVICE	1-HIGHWAY
(12)	BASE HIGHWAY NETWORK	1-PART OF NET
(13)	LRS INVENTORY RTE & SUBRTE	000000000101
(104)	NATIONAL HIGHWAY SYSTEM	0-NOT ON NHS
(26)	FUNCTIONAL CLASS	06-MINOR ARTERIAL RURAL
(100)	DEFENSE HIGHWAY	0-NOT STRAHNET
(101)	PARALLEL STRUCTURE	N-NONE EXISTS
(102)	DIRECTION OF TRAFFIC	2-2 WAY
(10)	INVENTORY ROUTE MIN VERT CLEAR	99.99 M
(47)	INVENTORY ROUTE TOTAL HORIZ CLEAR	7.3 M
(68)	DECK GEOMETRY	2 INTOLERABLE - REPLACE
(72)	APPR ROADWAY ALIGN	8 EQUAL DESIRABLE CRIT
(105)	FEDERAL LANDS HWY	0-NOT APPLICABLE
(110)	DESIGNATED NATIONAL NETWORK	0-NOT ON NET
(20)	TOLL	3-ON FREE ROAD
(28a)	LANES	2
	SPEED	55
(103)	TEMPORARY STRUCTURE	N/A

DECK ELEMENT INSPECTION RATINGS AND NOTES

(58) DECK RATING = 7

Elem No.	Defect/ Prot	Defect	Element Description	Env	Total Qty	Units	Qty in each Condition State CS 1	CS 2	CS 3	CS 4
16			**Top Flange-RC**	2	731	sq.m	723	8	0	0
	1080		**Delamination/Spall/Patched Area**	2	4		0	4	0	0
	1130		**Cracking (RC and Other)**	2	4		0	4	0	0
	511		**Deck Wearing Surface-Concrete**	2	663	sq.m	663	0	0	0
	521		**Concrete Coat.(Meth/Paint/Seal)**	2	663	sq.m	0	0	0	663
		3540	**Effectiveness-(Concrete PC)**	2	663		0	0	0	663

(16) Top Flange-RC

There are numerous repaired spalls and spalls with exposed rebar throughout the top flange. The general locations of these conditions are documented on the Deterioration Table attached to the 06/08/2011 Partial Bridge Inspection Report, which provides detailed information as to the exact location and size of each individual condition.

(16-1080) Delamination/Spall/Patched Area

There are patched corner spalls up to 8 inches in diameter x 1 inch deep at the left overhangs of Spans 5 and 6. See Photo 2 from the 09/18/2018 Other Inspection Report. (Quantity = 1 SM x 3 locations = 3 SM)

There is a corner spall (24 inches x 6 inches x up to 6 inches deep) with exposed rebar at the left overhangs of Span 4 approximately 10 feet from Bent 5. See Photo 3 from the 09/18/2018 Other Inspection Report. (Quantity = 1 SM, CS3)

(16-1130) Cracking (RC and Other)

There are 4 transverse soffit cracks which extend from Girder 1 to Girder 2. Two of the cracks are located in Span 1, a crack is located in Span 5 (main span) between Spandrel Columns 2 and 3, and a crack is located in Span 6. The cracks appear to have been epoxy injected. Refer to General Plan Sheets 1 and 2 as well as the Deterioration Table attached to the 06/08/2011 Other - Partial Inspection Report for additional information on these cracks. These conditions have not significantly changed when compared to Photos 1, 33 and 52, from the 06/08/2011 Other Report. (Quantity = 1 SM x 4 locations = 4 SM)

DECK ELEMENT INSPECTION RATINGS AND NOTES

(58) DECK RATING = 7

Elem No.	Defect/ Prot	Defect	Element Description	Env	Total Qty	Units	Qty in each Condition State CS 1	CS 2	CS 3	CS 4

(16-511) Deck Wearing Surface-Concrete

A polyester concrete overlay was placed on the deck in 2019 under Project EA 05-1H6604.

There were no significant defects noted.

(16-521-3540) Effectiveness-(Concrete PC)

The concrete sealant applied to the soffit (project EA 05-34440, 1993) is assumed to no longer be effective. It is believed that concrete sealant products are typically effective for approximately 15 years from the date of application. No corrective action required at this time. (Quantity = 100% of total)

JOINT - APPROACH - RAIL

RAIL INFORMATION

(36a) Rail Code 0 (36b) Transition 0 (36c) Appr Guardrail 0 (36d) Appr Guardrail End 0 Roadway Speed 55 MPH

JOINT/APPROACH/RAIL ELEMENT INSPECTION RATINGS AND NOTES

Elem No.	Defect/ Prot	Defect	Element Description	Env	Total Qty	Units	Qty in each Condition State CS 1	CS 2	CS 3	CS 4
331			**Railing-RC**	3	174	m	43	0	131	0
	1080		**Delamination/Spall/Patched Area**	3	131		0	0	131	0

(331) Railing-RC

There is thrie beam railing installed at the interior face of both bridge rails. This rail is intended as a temporary measure until the extensive rail deterioration is mitigated or the rail is replaced. See attached Photo 3.

(331-1080) Delamination/Spall/Patched Area

There are incipient spalls and shallow spalls (less than 1 inch deep) with exposed rebar throughout both bridge rails (interior/exterior faces) which typically measure 3-6 inches wide x 6-18 inches long. This condition has not significantly changed when compared to Photos 7 and 8 from the 07/22/15 BIR. This condition is predominantly located at the balusters. The 2009 Work Recommendation to rehabilitate the rails is still valid. (Quantity = 75% of the total)

JOINT/RAIL PHOTOGRAPHS

Photo 3
Thrie beam installation at the interior of both bridge rails (shown from Abut. 1, right).

SUPERSTRUCTURE

SUPERSTRUCTURE ELEMENT INSPECTION RATINGS AND NOTES

(59) SUPERSTRUCTURE RATING = 5

Elem No.	Defect/ Prot	Defect	Element Description	Env	Total Qty	Units	Qty in each Condition State CS 1	CS 2	CS 3	CS 4
110			**Girder/Beam-RC**	3	174	m	163	5	6	0
	1080		**Delamination/Spall/Patched Area**	3	6		0	0	6	0

SUPERSTRUCTURE

SUPERSTRUCTURE ELEMENT INSPECTION RATINGS AND NOTES

(59) SUPERSTRUCTURE RATING = 5

Elem No.	Defect/ Prot	Defect	Element Description	Env	Total Qty	Units	Qty in each Condition State CS 1	CS 2	CS 3	CS 4
	1130		**Cracking (RC and Other)**	3	5		0	5	0	0
	521		**Concrete Coat.(Meth/Paint/Seal)**	3	281	sq.m	0	0	0	281
		3540	**Effectiveness-(Concrete PC)**	3	281		0	0	0	281

(110-1080) Delamination/Spall/Patched Area

There is delamination, sound patches, and failed patches located in Girder 1 (Span 5) and Girder 2 (Spans 2, 4, and 5). See Photos 4-8 from the 09/18/2018 Other - Partial Inspection Report.

The 2013 Work Recommendation to rehabilitate the superstructure elements is still valid. (Quantity = 6 SM)

(110-1130) Cracking (RC and Other)

There are vertical to diagonal cracks up to 0.03 inch wide in Girder 2 (Span 2) in the right face at the base of the corbel at Bent 3.

There are vertical to diagonal cracks up to 0.03 inch wide in Girder 2 (Bent 5) in the right face near the top of the corbel at Bent 5.

There are vertical to diagonal cracks up to 0.01 inch wide in Girder 2 (Span 5) in the right face near the base of the corbel at Spandrel Column 5.

There are vertical to diagonal cracks up to 0.01 inch wide in Girder 2 (Span 5) in the right face near the top of the corbel at Spandrel Column 7.

There are vertical to diagonal cracks up to 0.01 inch wide in Girder 2 (Span 5) at Spandrel Column 7.

Additionally, refer to Items 90, 91, and 94-96 of the Deterioration Table (Page 5) of the 09/18/2018 Other - Partial Inspection Report, for the general locations and detailed information of these conditions. No corrective action required at this time. (Quantity = 1 LM x 5 locations = 5 LM)

(110-521-3540) Effectiveness-(Concrete PC)

The concrete sealant applied to both girders (project EA 05-34440, 1993) is assumed to no longer be effective. It is believed that concrete sealant products are typically effective for approximately 15 years from the date of application. No corrective action required at this time. (Quantity = 100% of total)

144			**Arch-RC**	3	92	m	76	2	14	0
	1080		**Delamination/Spall/Patched Area**	3	14		0	0	14	0
	1130		**Cracking (RC and Other)**	3	2		0	2	0	0
	521		**Concrete Coat.(Meth/Paint/Seal)**	3	847	sq.m	0	0	0	847
		3540	**Effectiveness-(Concrete PC)**	3	847		0	0	0	847

(144) Arch-RC

There are numerous delaminations, sound patches and failed patches throughout the arch elements (spandrel columns, ribs, diaphragms). The general locations of these conditions are documented on the Deterioration Tables (Pages 1-8) of the 09/18/2018 Other - Partial Inspection Report, which provide detailed information as to the exact location and size of each individual condition. The appropriate ELI defects have been updated accordingly.

Concrete core samples were taken from the deck and arch ribs in April of 2012 and analyzed for chloride content. The tests revealed chlorides have reached a level of 18.9 LB/CY in the deck and 10.63 LB/CY in the arch ribs; which indicate active corrosion between the depths of 0-2 inches. Additionally, the tests revealed chlorides have reached a level of 2.5 LB/CY in the deck and 3.23 LB/CY in the arch ribs; which indicate corrosion has initiated between the depths of 2-3 inches. For additional information regarding the core sample test results and locations the samples were taken, refer to the 07/29/2013 BIR.

SUPERSTRUCTURE

SUPERSTRUCTURE ELEMENT INSPECTION RATINGS AND NOTES

(59) SUPERSTRUCTURE RATING = 5

(144-1080) Delamination/Spall/Patched Area

There is a corner spall (2 feet long x 3 inches x 3 inches) with exposed rebar at the upstation and right faces of Column 1 of Spandrel Bent 1. See attached Photo 4.

There is a delamination (3.5 feet long x 18 inches) at the left face of the right arch rib adjacent to Spandrel Column 4. See attached Photo 5.

There is a delamination (3.5 feet long x 18 inches) at the right face of the left arch rib adjacent to Spandrel Column 4. See attached Photo 6.

The following previously identified defects represent the typical (worst case) conditions recorded in the Deterioration Tables from the 09/18/2018 Other - Partial Inspection Report.

There is a delamination (10 inch diameter) within a sound patched area (36 inches x 12 inches) at the top of the left rib between Column 1 of Spandrel Bent 5 and Column 1 of Spandrel Bent 6. See Photo 9 from the 09/18/2018 Other - Partial Inspection Report.

There is a spall (72 inches x 12 inches x 3 inches) with exposed rebar at the left upstation corner of Column 1 of Spandrel Bent 2. See Photo 10 from the 09/18/2018 Other - Partial Inspection Report.

There is a failed patch (48 inches x 10 inches) with exposed rebar at the left upstation corner of Column 7 of Spandrel Bent 2. See Photo 11 from the 09/18/2018 Other - Partial Inspection Report.

There is a delamination (48 inches x 3 inches x 18 inches) with exposed rebar at the top of the arch 3 feet from Column 4 of Spandrel Bent 2. See Photo 12 from the 09/18/2018 Other - Partial Inspection Report.

There is a delamination (48 inches x 6 inches x 3 inches) with exposed rebar at the top of the arch midway between Column 2 of Spandrel Bent 2 and Column 3 of Spandrel Bent 2. See Photo 13 from the 09/18/2018 Other - Partial Inspection Report.

Generally, the extent of these conditions have not significantly changed when compared with Photos 1-52 from the 06/08/2011 BIR. The 2013 Work Recommendation to repair and patch these defects is still valid. (Quantity = 15% of the total)

(144-1130) Cracking (RC and Other)

There is pattern cracking up to 0.02 inch wide, spaced 3-6 inches apart, throughout the bottom 4 feet of both columns at Spandrel Bent 2. This condition has not significantly changed when compared to Photo 31 from the 06/082011 BIR. No corrective action warranted at this time.

Refer to General Plan Sheets 1 and 2 as well as the Deterioration Table attached to the 6/8/2011 Other - Partial Inspection Report. (Quantity = 1 LM * 2 Locations = 2 LM)

(144-521-3540) Effectiveness-(Concrete PC)

The concrete sealant applied to the arch elements (arch ribs, struts, and spandrel columns) under project EA 05-34440 in 1993, is assumed to no longer be effective. It is believed that concrete sealant products are typically effective for approximately 15 years from the date of application. No corrective action required at this time. (Quantity = 100% of total)

Elem No.	Defect/ Prot	Defect	Element Description	Env	Total Qty	Units	Qty in each Condition State CS 1	CS 2	CS 3	CS 4
155			**Floor Beam-RC**	2	41	m	40	1	0	0
	1080		**Delamination/Spall/Patched Area**	2	1		0	1	0	0
	521		**Concrete Coat.(Meth/Paint/Seal)**	2	54	sq.m	0	0	0	54
		3540	**Effectiveness-(Concrete PC)**	2	54		0	0	0	54

(155) Floor Beam-RC

This element is for the floor beams throughout Span 5.

(155-1080) Delamination/Spall/Patched Area

There is a corner delamination (36 inches x 3 inches x 3 inches) at the bottom of the downstation face of the floor beam at Bent 4. See Photo 14 from the 09/18/2018 Other - Partial Inspection Report.

The 2013 Work Recommendation to rehabilitate the superstructure elements is still valid. (Quantity = 1 SM)

(155-521-3540) Effectiveness-(Concrete PC)

The concrete sealant applied to the floor beams throughout Span 5, under project EA 05-34440 in 1993, is assumed to no longer be effective. It is believed that concrete sealant products are typically effective for approximately 15 years from the date of application. No corrective action required at this time. (Quantity = 100% of total)

SUPERSTRUCTURE

SUPERSTRUCTURE ELEMENT INSPECTION RATINGS AND NOTES

(59) SUPERSTRUCTURE RATING = 5

Elem No.	Defect/ Prot	Defect	Element Description	Env	Total Qty	Units	Qty in each Condition State CS 1	CS 2	CS 3	CS 4
310			**Bearing-Elastomeric**	2	8	each	8	0	0	0

(310) Bearing-Elastomeric

This element is for the elastomeric bearings at Spandrel Bents 4 and 5 and Abutments 1 and 7. (Quantity = 2 at each location x 4 locations = 8 total)

The left elastomeric pad at Abutment 1 has minor cracking and both elastomeric pads at Abutment 1 have a slight bulge. This condition has not significantly changed when compared to Photo 4 from the 07/24/2017 BIR. No corrective action required at this time.

There were no other significant defects noted.

315			**Bearing-Disk**	2	8	each	0	8	0	0
	1000		**Corrosion**	2	8		0	8	0	0

(315) Bearing-Disk

This element is for the PTFE bearings at Spandrel Bents 4 and 5 and Abutments 1 and 7. (Quantity = 2 at each location x 4 locations = 8 total)

(315-1000) Corrosion

The PTFE bearings which are located at Spandrel Bents 4 and 5 as well as Abutments 1 and 7 (2 at each location) have blanket rust along the edges of the steel plates. This condition has not significantly changed when compared to Photos 53 and 54 from the 06/08/2011 BIR.

No corrective action warranted at this time. (Quantity = 8 Bearings)

SUPERSTRUCTURE PHOTOGRAPHS

Photo 4
Corner spall at the upstation and right faces of Column 1 of Spandrel Bent 1.

Photo 5
Delamination at the left face of the right arch rib adjacent to Spandrel Column 4.

Photo 6
Delamination at the right face of the left arch rib adjacent to Spandrel Column 4.

Photo 7
Spall with exposed rebar on the left face of Column 2 at Bent 5.

SUBSTRUCTURE

DESCRIPTION UNDER STRUCTURE

(42b)	TYPE OF SERVICE UNDER	5-WATERWAY	(38)	NAVIGATION CONTROL	0: NO CONTROL
(69)	UNDERCLEARANCES V - H	N NOT APPLICABLE (NBI)	(111)	PIER PROTECTION	**N/A**
(71)	WATER ADEQUACY	9 ABOVE DESIRABLE	(39)	NAVIGATION VERTICAL CLEARANCE	0.0 M
(61)	CHANNEL PROTECTION	6 BANK SLUMPING	(116)	VERT-LIFT BRIDGE NAV MIN VERTICAL CLEAR	M
(113)	SCOUR	9 ON DRY LAND	(40)	NAVIGATION HORIZONTAL CLEARANCE	0.0 M
	SCOUR POA DATE	N/A			

CHANNEL DESCRIPTION

Deep and narrow bedrock channel with steep gradient and non-cohesive (sand, gravel, and bedrock) soils with heavily vegetated embankments.

SUBSTRUCTURE ELEMENT INSPECTION RATINGS AND NOTES

(60) SUBSTRUCTURE RATING = 5

Elem No.	Defect/ Prot	Defect	Element Description	Env	Total Qty	Units	Qty in each Condition State CS 1	CS 2	CS 3	CS 4
205			**Column-RC**	3	14	each	5	0	9	0
	1080		**Delamination/Spall/Patched Area**	3	9		0	0	9	0
	521		**Concrete Coat.(Meth/Paint/Seal)**	3	176	sq.m	0	0	0	176

SUBSTRUCTURE

SUBSTRUCTURE ELEMENT INSPECTION RATINGS AND NOTES

(60) SUBSTRUCTURE RATING = 5

Elem No.	Defect/ Prot	Defect	Element Description	Env	Total Qty	Units	Qty in each Condition State CS 1	CS 2	CS 3	CS 4
		3540	**Effectiveness-(Concrete PC)**	3	176		0	0	0	176

(205) Column-RC

There are numerous spalls and incipient spalls throughout the substructure (column) elements. The general locations of these conditions are documented on the Deterioration Tables (Pages 1-8) of the 09/18/2018 Other - Partial Inspection Report, which provides detailed information as to the exact location and size of each individual condition.

There is pattern cracking up to 0.010 inch wide, spaced 3-6 inches apart, throughout the recast section (bottom 4 feet) of both columns at Spandrel Bent 2. The cracked areas were tapped with a hammer and found to be sound. No corrective action is required at this time. (Non-recordable defect)

(205-1080) Delamination/Spall/Patched Area

There are delaminations, spalls, and failed patched areas throughout several of the columns at each bent. The locations and extent of these defects are documented on General Plan Sheets 1 and 2 and the Deterioration Table attached to the 06/08/2011 Other - Partial Inspection Report.

Items 3, 4, 5, 6, 10, 12, 19, and 21 (incipient spall defects), previously identified in the Deterioration Table attached to the 06/08/2011 Other - Partial Inspection Report, have now progressed (within the same general limits) to be spalls with exposed rebar. See Photos 15-19 from the 09/18/2018 Other - Partial Inspection Report.

Generally, the extent of the remaining conditions have not significantly changed when compared with Photos 1-52 from the 06/08/2011 Other - Partial Inspection Report and Photos 15 and 19 from the 09/18/2018 Other - Partial Inspection Report. The 2013 Work Recommendation to repair and patch these defects is still valid. (Quantity = 9 Columns)

Additionally, a spall (15 inches x 12 inches x 1 inch deep) with exposed rebar on the left face of Column 2 at Bent 5, approximately 12 feet below the horizontal column bracing, was observed. See attached Photo 7. (Co-located defect)

(205-521-3540) Effectiveness-(Concrete PC)

The concrete sealant applied to the bent and abutment columns (project EA 05-34440, 1993) is assumed to no longer be effective. It is believed that concrete sealant products are typically effective for approximately 15 years from the date of application. No corrective action required at this time. (Quantity = 100% of total)

217			**Abutment-Masonry**	2	8	m	8	0	0	0

(217) Abutment-Masonry

This element is for the rubble masonry bulkhead at Abutment 7.

There were no significant defects noted.

220			**Pile Cap/Footing-RC**	2	17	m	16	1	0	0
	1130		**Cracking (RC and Other)**	2	1		0	1	0	0

(220) Pile Cap/Footing-RC

This element is for the exposed RC pile cap/anchor block at both abutments. These elements act as the support/abutment at each location and measures 28 feet wide per the As-built plans.

(220-1130) Cracking (RC and Other)

There are longitudinal and transverse cracks up to 0.03 inch wide, spaced 1-2 feet apart. These cracks typically extend 2-6 feet in length and are in the top surface of the anchor block/pile cap at Abutment 1 throughout the right wheel line of the northbound lane. This condition has not significantly changed when compared with Photo 5 from the 07/22/15 BIR. No corrective action required at this time. (Quantity = 1 LM)

234			**Pier Cap-RC**	2	36	m	36	0	0	0
	521		**Concrete Coat.(Meth/Paint/Seal)**	2	40	sq.m	0	0	0	40
		3540	**Effectiveness-(Concrete PC)**	2	40		0	0	0	40

(234) Pier Cap-RC

This element is for the pier cap at each bent and both abutments.

There were no significant defects noted.

(234-521-3540) Effectiveness-(Concrete PC)

The concrete sealant applied to the pier cap at each bent and at both abutments (project EA 05-34440, 1993) is assumed to no longer be effective. It is believed that concrete sealant products are typically effective for approximately 15 years from the date of application. (Quantity = 100% of total)

SUBSTRUCTURE

SUBSTRUCTURE ELEMENT INSPECTION RATINGS AND NOTES

(60) SUBSTRUCTURE RATING = 5

Elem No.	Defect/ Prot	Defect	Element Description	Env	Total Qty	Units	Qty in each Condition State CS 1	CS 2	CS 3	CS 4
252			**Pile-CIDH**	2	1	ea.	1	0	0	0

(252) Pile-CIDH

The pile element is included to indicate the presence of piles on this structure. The piles were not exposed for visual inspection. No indication of pile distress was noted in any substructure element.

256			**Slope Protection**	2	1	ea.	1	0	0	0

(256) Slope Protection

This element is for the concrete sack slope protection at Abutment 1.

There were no significant defects noted.

OTHER PHOTOGRAPHS

Photo 1
UBIT deployment off of the right side of structure (NB lane).

Photo 2

WORK RECOMMENDATIONS

DECK WORK RECOMMENDATIONS - NONE

JOINT/APPR/RAIL WORK RECOMMENDATIONS

Rec Date	09/25/2009	Work By	BRIDGE CREW	Est Cost	$15,600	Dist Target	
Status	LONG LEAD	Action	Railing-Rehab	Str Target	2 YEARS	EA	1H800

Remove any unsound concrete from the delaminated and spalled areas throughout both bridge rails. Clean and paint any exposed steel and patch or recast the resulting spalled areas.

Rec Date	02/10/1984	Work By	SHOPP	Est Cost	$324,720	Dist Target	
Status	LONG LEAD	Action	Railing-Upgrade	Str Target	2 YEARS	EA	1H800

F1-03 / F2-0 / F3-0 / Rail Type-C.WIN

SUPERSTRUCTURE WORK RECOMMENDATIONS

Rec Date	07/29/2013	Work By	SHOPP	Est Cost	$4,190,000	Dist Target	
Status	AWARDED	Action	Super-Rehab	Str Target	4 YEARS	EA	1H460

Remove any unsound concrete from the superstructure and substructure elements. Patch the resulting spalled areas including galvanic anodes.

Conduct corrosion mitigation on all superstructure and substructure elements. The results of EA 05-1A890 will aid in determining what mitigation process will be utilized. Following the corrosion mitigation these elements are to have a sealant (silane) applied to them.

Scaffolding - 150 [$/SF of deck area] * 6,852 = 1,027,800
Spall repair - 180 [$/SF] * (72+ 650) [UBIT inspection + 0.5 of bottom of arch ribs] * 1.25 [factor of safety] = 162,450
Galvanic Anodes - 60 [$/SF spalled area] * (72 + 650) * 1.25 = 54,150
Corrosion Mitigation - 108 [$/SF] * 25,164 = 2,717,715
Silane - 9 [$/SF] * 25,164 = 226,475
Total = 4,188,600 ~ 4,190,000

SUBSTRUCTURE WORK RECOMMENDATIONS - NONE

OTHER WORK RECOMMENDATIONS - NONE

44 0018 GARRAPATA CREEK 05-MON-001-62.97 07/22/2021 [AAAN]
133 - PHOTO> Unclassified

Photo No. 1
UBIT deployment off of the right side of structure (NB lane).

44 0018 GARRAPATA CREEK 05-MON-001-62.97 07/22/2021 [AAAN]
122 - PHOTO> Rail-Misc

Photo No. 3
Thrie beam installation at the interior of both bridge rails (shown from Abut. 1, right).

44 0018 GARRAPATA CREEK 05-MON-001-62.97 07/22/2021 [AAAN]
107 - PHOTO> Super-Damage/Deterioration

Photo No. 4
Corner spall at the upstation and right faces of Column 1 of Spandrel Bent 1.

44 0018 GARRAPATA CREEK 05-MON-001-62.97 07/22/2021 [AAAN]
107 - PHOTO> Super-Damage/Deterioration

Photo No. 5
Delamination at the left face of the right arch rib adjacent to Spandrel Column 4.

44 0018 GARRAPATA CREEK 05-MON-001-62.97 07/22/2021 [AAAN]
107 - PHOTO> Super-Damage/Deterioration

Photo No. 6
Delamination at the right face of the left arch rib adjacent to Spandrel Column 4.

44 0018 GARRAPATA CREEK 05-MON-001-62.97 07/22/2021 [AAAN]
107 - PHOTO> Super-Damage/Deterioration

Photo No. 7
Spall with exposed rebar on the left face of Column 2 at Bent 5.

Attachment 3
Section 4(f) MOU between Caltrans' and FHWA

MEMORANDUM OF UNDERSTANDING BETWEEN THE FEDERAL HIGHWAY ADMINISTRATION AND THE CALIFORNIA DEPARTMENT OF TRANSPORTATION CONCERNING THE STATE OF CALIFORNIA'S PARTICIPATION IN THE SURFACE TRANSPORTATION PROJECT DELIVERY PROGRAM PURSUANT TO 23 U.S.C. 327

THIS MEMORANDUM OF UNDERSTANDING (hereinafter "MOU"), made and entered into by and between the FEDERAL HIGHWAY ADMINISTRATION (hereinafter "FHWA"), an administration in the UNITED STATES DEPARTMENT OF TRANSPORTATION (hereinafter "USDOT"), and the CALIFORNIA DEPARTMENT OF TRANSPORTATION (hereinafter "Caltrans"), a department of the State of California, hereby provides as follows:

WITNESSETH:

Whereas, Section 327 of Title 23 of the U.S. Code (U.S.C.) establishes the Surface Transportation Project Delivery Program (hereafter "Program") that allows the Secretary of the United States Department of Transportation (hereafter "USDOT Secretary") to assign and States to assume the USDOT Secretary's responsibilities under the National Environmental Policy Act of 1969 (42 U.S.C. 4321, et seq.) (hereafter "NEPA"), and all or part of the USDOT Secretary's responsibilities for environmental review, consultation, or other actions required under any Federal environmental law with respect to highway public transportation, railroad, and multimodal projects within the State; and

Whereas, the Program was initially established as a pilot called the Surface Transportation Project Delivery Pilot Program (hereafter "Pilot Program") by the Safe, Accountable, Flexible, Efficient Transportation Equity Act: A Legacy for Users (Pub. L. 109-59 [Aug. 10, 2005]) (hereinafter "SAFETEA-LU") with a termination date that was six years after the date of enactment of SAFETEA-LU; and

Whereas, the Pilot Program was codified at 23 U.S.C. 327; and

Whereas, Section 1313 of the Moving Ahead for Progress in the 21st Century Act (Pub. L. 112-141) (2012) amended Section 327, making the Pilot Program permanent and changing the name to the Program; and

Whereas, Sections 1308 and 1446 of the Fixing America's Surface Transportation (FAST) Act (Pub. 114-94) (2015), amended Section 327; and

Whereas, 23 U.S.C. 327(b)(2) requires a State to submit an application in order to participate in the Program; and

Whereas, on May 18, 2007, Caltrans submitted its application to the FHWA for participation in the Pilot Program; and

Whereas, the FHWA solicited the views of other appropriate Federal agencies concerning Caltrans' application as required by 23 U.S.C. 327(b)(5); and

Whereas, the USDOT Secretary, acting by and through the FHWA pursuant to 49 CFR 1.85(a)(3), approved Caltrans' Pilot Program application, finding that Caltrans met all of the requirements of 23 U.S.C. 327 and 23 CFR 773; and

Whereas, following the FHWA's approval of Caltrans' Pilot Program application, on July 1, 2007, the FHWA and Caltrans entered into an MOU under which Caltrans assumed and carried out the assigned duties and responsibilities of the USDOT Secretary under NEPA and other Federal environmental laws under the auspices of the Pilot Program; and

Whereas, Caltrans has continually participated in the Pilot Program and the permanent Program since July 1, 2007; and

Whereas, the history of Caltrans' participation in the two programs is set forth in detail in the FHWA-Caltrans MOU dated December 23, 2016 (2016 MOU), hereby incorporated by reference; and

Whereas, the FHWA conducted audits as required by SAFETEA-LU semiannually during the first two-year period (2007-2008) and annually during the next two-year period (2009-2010) of the State's participation in the Program; and

Whereas, the FHWA has made the audit reports available to the public for comment through publication of notices in the *Federal Register*; and

Whereas, after 2010 the FHWA has monitored Caltrans' participation in the program in accordance with 23 U.S.C. 327(h); and

Whereas, Caltrans has also conducted self-assessments and quarterly reports on its performance in the Program; and

Whereas, the FHWA's audit reports and Caltrans's self-assessments are publicly available for inspection at
http://www.dot.ca.gov/hq/env/nepa/html/documents_reports.htm; and

Whereas, on December 18, 2019, Caltrans notified the FHWA of its intent to renew participation in the Program with respect to highway projects; and

Whereas, pursuant to 23 CFR 773.115(b), Caltrans coordinated with the FHWA to determine if significant changes have occurred or new assignment responsibilities would be sought that would warrant a statewide notice and comment opportunity prior to the State's submission of the renewal package; and

Whereas, on June 4, 2020, after coordination between the agencies, the FHWA

determined that a statewide notice and comment opportunity was unnecessary prior to the State's submission of the renewal package; and

Whereas, pursuant to 23 U.S.C. 773.115(d), Caltrans submitted a renewal package to the FHWA on August 25, 2020, for approval to continue the assigned duties and responsibilities for highway projects pursuant to the Program; and

Whereas, on December 8, 2021, and April 14, 2022, FHWA sent letters to Caltrans authorizing an extension of Caltrans' assigned and assumed responsibilities under the 2016 MOU in accordance with 23 CFR 773.115(h) to allow the parties to complete the renewal process for this renewal MOU. The letter sent on April 14, 2022, extended the term of the 2016 MOU to either May 31, 2022, or the effective date of this renewal MOU, whichever is earlier; and

Whereas, on April 19, 2022, the FHWA published a *Federal Register* Notice and provided an opportunity for comment on Caltrans's renewal request and solicited the views of the public and other Federal agencies concerning Caltrans' renewal request as required by 23 CFR 773.115(f); and

Whereas, the USDOT Secretary, acting by and through the FHWA, has considered the renewal package, comments received as a result of the *Federal Register* Notice, monitoring reports, and the State's overall performance in the Program as required by 23 CFR 773.115(g) and has determined that Caltrans' renewal package meets all the requirements of 23 CFR 773 and 23 U.S.C. 327; and

Whereas, on June 6, 2010, June 7, 2013, May 31, 2016 (as amended on December 30, 2016), and April 18, 2019, the FHWA and Caltrans executed Memoranda of Understanding assigning Caltrans the USDOT Secretary's responsibilities for environmental reviews determining whether certain designated activities qualify for categorical exclusions (CE) pursuant to 23 U.S.C. 326 (hereinafter 326 CE MOU); and

Whereas, on April 18, 2022, the FHWA and Caltrans renewed the 326 CE MOU.

Now, therefore, the FHWA and Caltrans agree as follows:

PART 1. PURPOSE OF MEMORANDUM OF UNDERSTANDING

1.1 Purpose

1.1.1 This MOU officially approves Caltrans' request to renew participation in the Program and is the written agreement required pursuant to 23 U.S.C. 327(a)(2)(A) and (c) under which the USDOT Secretary may assign, and Caltrans may assume, the responsibilities of the USDOT Secretary for Federal environmental laws with respect to one or more highway projects within the State of California.

1.1.2 The FHWA's decision to execute this MOU is based upon the information,

representations, and commitments contained in Caltrans' August 25, 2020, renewal package, the auditing and monitoring reports, consideration of comments received during the comment period, and the State's overall performance in the Program since July 1, 2007. This MOU incorporates by reference the August 25, 2020, renewal package.

1.1.3 This MOU shall be effective upon the date of final execution by both parties (hereinafter the "Effective Date").

1.1.4 Pursuant to 23 U.S.C. 327(d), and subpart 4.3 of this MOU, third parties may challenge Caltrans' actions in carrying out environmental review responsibilities assigned under this MOU. Third parties also have the right to file a complaint against Caltrans with the FHWA under Title VI of the Civil Rights Act of 1964 and the FHWA has the authority and jurisdiction to accept, investigate, and make a determination regarding the allegations in the complaint. Otherwise, this MOU is not intended to, and does not, create any new right or benefit, substantive or procedural, enforceable at law or in equity by any third party against the State of California, its departments, agencies, or entities, its officers, employees, or agents. This MOU is not intended to, and does not, create any new right or benefit, substantive or procedural, enforceable at law or in equity by any third party against the United States, its departments, agencies, or entities, its officers, employees, or agents.

1.1.5 The assignment of responsibilities under this MOU is made pursuant to the authority granted to the Secretary under 23 U.S.C. 327. Any provision of this MOU, or any portion of any provision, that is deemed to be illegal, unenforceable, or beyond the scope of the Secretary's authority shall be severed from this MOU, without affecting the validity of the remainder of the MOU. In such event, all other provisions or parts of provisions of this MOU shall remain in full force and effect.

PART 2. [RESERVED]

PART 3. ASSIGNMENTS AND ASSUMPTIONS OF RESPONSIBILITY

3.1 Assignments and Assumptions of NEPA Responsibilities

3.1.1 Pursuant to 23 U.S.C. 327(a)(2)(A), on the Effective Date, the FHWA assigns, and Caltrans assumes, subject to the terms and conditions set forth in 23 U.S.C. 327 and this MOU, all of the USDOT Secretary's responsibilities for compliance with NEPA with respect to the highway projects specified under subpart 3.3. This includes statutory provisions, regulations, executive orders, policies, and guidance related to the implementation of NEPA for highway projects such as 23 U.S.C. 139, 40 CFR 1500–1508, DOT Order 5610.1C, and 23 CFR 771 as applicable.

3.1.2 On the cover page of each environmental assessment (EA), finding of no significant impact (FONSI), environmental impact statement (EIS), and record of

decision (ROD) prepared under the authority granted by this MOU, and for any 23 U.S.C. 327 CE determination it makes, Caltrans shall insert the following language in a way that is conspicuous to the reader or include it in a CE project record.

> "The environmental review, consultation, and other actions required by applicable Federal environmental laws for this project are being, or have been, carried out by Caltrans pursuant to 23 U.S.C. 327 and a Memorandum of Understanding dated _____, and executed by FHWA and Caltrans."

3.1.3 Caltrans shall disclose to the public and agencies, as part of agency outreach and public involvement procedures, including any notice of intent or scoping meeting notice, the disclosure in subpart 3.1.2 above.

3.1.4 The assignment under this part does not alter the scope and terms of the 326 CE MOU between the FHWA and Caltrans.

3.2 Assignments and Assumptions of Federal Environmental Laws Other Than NEPA

3.2.1 Pursuant to 23 U.S.C. 327(a)(2)(B), on the Effective Date, the FHWA assigns and Caltrans assumes, subject to the terms and conditions set forth in 23 U.S.C. 327 and this MOU, all of the USDOT Secretary's responsibilities for environmental review, reevaluation, consultation, or other action pertaining to the review or approval of highway projects specified under subpart 3.3 required under the following Federal environmental laws and executive orders related to highway projects:

Air Quality

- Clean Air Act, 42 U.S.C. 7401-7671q, with the exception of any conformity determinations

Noise

- Noise Control Act of 1972, 42 U.S.C. 4901-4918
- FHWA noise regulations at 23 CFR 772

Wildlife

- Endangered Species Act of 1973 (ESA), 16 U.S.C. 1531-1544
- Marine Mammal Protection Act, 16 U.S.C. 1361–1423h
- Anadromous Fish Conservation Act, 16 U.S.C. 757a-757f
- Fish and Wildlife Coordination Act, 16 U.S.C. 661-667d
- Migratory Bird Treaty Act, 16 U.S.C. 703-712
- Bald and Golden Eagle Protection Act, 16 U.S.C. 668-668d
- Magnuson-Stevens Fishery Conservation and Management Act of 1976, as amended, 16 U.S.C. 1801-1891d

Historic and Cultural Resources

- National Historic Preservation Act of 1966 (NHPA), as amended, 54 U.S.C.

300101 et seq.

- Archeological Resources Protection Act of 1979, 16 U.S.C. 470aa-470mm
- Archeological and Historic Preservation Act, 54 U.S.C. 312501-312508
- Native American Grave Protection and Repatriation Act, 25 U.S.C. 3001-3013; 18 U.S.C. 1170

Social and Economic Impacts

- American Indian Religious Freedom Act, 42 U.S.C. 1996
- Farmland Protection Policy Act, 7 U.S.C. 4201-4209

Water Resources and Wetlands

- Clean Water Act, 33 U.S.C. 1251-1387 (Sections 319, 401, and 404)
- Coastal Barrier Resources Act, 16 U.S.C. 3501-3510
- Coastal Zone Management Act, 16 U.S.C. 1451-1466
- Safe Drinking Water Act, 42 U.S.C. 300f—300j-26
- Rivers and Harbors Act of 1899, 33 U.S.C. 403
- Wild and Scenic Rivers Act, 16 U.S.C. 1271-1287
- Emergency Wetlands Resources Act, 16 U.S.C. 3901 and 3921
- Wetlands Mitigation, 23 U.S.C. 119(g), 23 U.S.C. 133(b)
- FHWA wetland and natural habitat mitigation regulations at 23 CFR 777
- Flood Disaster Protection Act, 42 U.S.C. 4001-4130

Parklands and Other Special Land Uses

- Section 4(f), 23 U.S.C. 138 and 49 U.S.C. 303
- FHWA/FTA Section 4(f) Regulations at 23 CFR 774
- Land and Water Conservation Fund, 54 U.S.C. 200302-200310

Hazardous Materials

- Comprehensive Environmental Response, Compensation, and Liability Act, 42 U.S.C. 9601-9675
- Superfund Amendments and Reauthorization Act of 1986, 42 U.S.C. 9671-9675
- Resource Conservation and Recovery Act, 42 U.S.C. 6901-6992k

Executive Orders Relating to Highway Projects

- E.O. 11990 - Protection of Wetlands
- E.O. 11988 - Floodplain Management (except approving design standards and determinations that a significant encroachment is the only practicable alternative under 23 CFR 650.113 and 650.115)
- E.O. 12898 - Federal Actions to Address Environmental Justice in Minority Populations and Low Income Populations
- E.O. 13112 - Invasive Species
- E.O. 13985 - Advancing Racial Equity and Support for Underserved Communities Through the Federal Government
- E.O. 13990 - Protecting Public Health and the Environment and Restoring Science to Tackle the Climate Crisis

- E.O. 14008 - Tackling the Climate Crisis at Home and Abroad
  Other Executive Orders not listed, but related to highway projects

FHWA-Specific

- Planning and Environmental Linkages, 23 U.S.C. 168, with the exception of those FHWA responsibilities associated with 23 U.S.C. 134 and 135.
- Programmatic Mitigation Plans, 23 U.S.C. 169 with the exception of those FHWA responsibilities associated with 23 U.S.C. 134 and 135

3.2.2 Any FHWA environmental review responsibility not explicitly listed above and assumed by Caltrans shall remain the responsibility of the FHWA unless the responsibility is added by written agreement of the parties through the amendment process established in Part 13 and pursuant to 23 CFR 773.113(b). This provision shall not be interpreted to abrogate Caltrans' responsibilities to comply with the requirements of any Federal environmental law that apply directly to Caltrans independent of the FHWA's involvement (through Federal assistance or approval).

3.2.3 The USDOT Secretary's responsibilities for government–to–government consultation with Indian tribes, as defined in 36 CFR 800.16(m), are not assigned to or assumed by Caltrans under this MOU. The FHWA remains responsible for all government–to–government consultation, including initiation of government–to–government consultation consistent with Executive Order 13175—Consultation and Coordination with Indian Tribal Governments, unless otherwise agreed as described in this Part. A notice from Caltrans to an Indian tribe advising the tribe of a proposed activity is not considered "government–to–government consultation" within the meaning of this MOU. If a project-related concern or issue is raised in a government–to–government consultation process with an Indian tribe, as defined in 36 CFR 800.16(m), and is related to NEPA or another Federal environmental law for which Caltrans has assumed responsibilities under this MOU, and either the Indian tribe or the FHWA determines that the issue or concern will not be satisfactorily resolved by Caltrans, then the FHWA may withdraw the assignment of all or part of the responsibilities for processing the project. In this case, the provisions of subpart 9.1 concerning the FHWA initiated withdrawal of assignment shall apply. This MOU is not intended to abrogate, or prevent future entry into, any agreement among Caltrans, the FHWA, and a tribe under which the tribe agrees to permit Caltrans to administer government–to–government consultation activities for the FHWA. However, such agreements are administrative in nature and do not relieve the FHWA of its legal responsibility for government–to–government consultation.

3.2.4 Nothing in this MOU shall be construed to permit Caltrans' assumption of the USDOT Secretary's responsibilities for conformity determinations required under Section 176 of the Clean Air Act (42 U.S.C. 7506) or any responsibility under 23 U.S.C. 134 and 135, or under 49 U.S.C. 5303 or 5304 (23 U.S.C. 327(a)(2)(B)(iv)(II)). In addition, FHWA remains responsible for implementing other laws, requirements and policies that are not assumed by Caltrans under this MOU, or other MOUs and agreements, with respect to highway projects. This includes, but is not limited to, laws,

requirements and policies related to Interstate access, right-of-way (including advance acquisition of right-of-way), value engineering, design, and other areas related to such projects.

3.2.5 The assignment under this part does not alter the scope and terms of the 326 CE MOU between the FHWA and Caltrans. Caltrans will engage in all environmental reviews authorized under the terms of that MOU if it elects to process the highway projects under the 326 CE MOU.

3.2.6 On the cover page of each biological assessment, historic properties or cultural resources report, Section 4(f) evaluation, or other analyses prepared under the authority granted by this MOU, Caltrans shall insert the following language in a way that is conspicuous to the reader:

> "The environmental review, consultation, and any other actions required by applicable Federal laws for this project are being, or have been, carried out by Caltrans pursuant to 23 U.S.C. 327 and the Memorandum of Understanding dated _____ and executed by FHWA and Caltrans."

3.2.7 Caltrans shall disclose to the public and agencies, as part of agency outreach and public involvement procedures, the disclosure in stipulation 3.2.6 above.

3.2.8 Caltrans will continue to adhere to the original terms of Biological Opinions (BOs) coordinated between the FHWA, Caltrans, and either the U.S. Fish and Wildlife Service (USFWS) or National Marine Fisheries Service (NMFS) or both USFWS and NMFS prior to the Pilot Program so long as the original BO terms are not amended or revised. Any revisions or amendments to a BO made under assumption of the FHWA's environmental responsibilities would be Caltrans' responsibility. Caltrans agrees to assume the FHWA's environmental review role and responsibilities as identified in existing interagency agreements among Caltrans, USFWS, NMFS, and the FHWA. Caltrans agrees to continue to assume the FHWA's ESA Section 7 responsibilities for consultations (formal and informal).

3.2.9 Caltrans will not make any determination that an action constitutes a constructive use of a publicly owned park, public recreation area, wildlife refuge, waterfowl refuge, or historic site under Section 4(f) without first consulting with the FHWA and obtaining the FHWA's approval of such determination.

3.3 Highway Projects

3.3.1 Except as provided by subpart 3.3.2 below or otherwise specified in this subpart, the assignments and assumptions of the USDOT Secretary's responsibilities under subparts 3.1 and 3.2 above shall apply with respect to the environmental review, consultation, or other action pertaining to the review or approval of the following classes of highway projects located within the State of California. The definition of "highway project" is found at 23 CFR 773.103, and for purposes of this MOU, "highway project" includes eligible preventative maintenance activities. Prior to approving any CE

determination under this MOU, FONSI, final EIS, or final EIS/ROD, the State of California shall ensure and document that for any proposed project the design concept, scope, and funding are consistent with the current Transportation Improvement Plan (TIP), Regional Transportation Plan (RTP), or Metropolitan Transportation Plan (MTP).

A. Projects requiring an EIS, both on the state highway system (SHS) and Local Assistance projects off the SHS that are funded by the FHWA or require FHWA approvals.

B. Projects qualifying for CEs, both on the SHS and Local Assistance projects off the SHS that are funded by the FHWA or require FHWA approvals, and that do not qualify for assignment of responsibilities pursuant to the 326 CE MOU.

C. Projects requiring EAs, both on the SHS and Local Assistance projects off the SHS that are funded by the FHWA or require FHWA approvals:

D. Projects funded by other Federal agencies [or projects without any Federal funding] that also require FHWA approvals and meet the definition of a highway project found at 23 CFR 773.103. For these projects, Caltrans would not assume the NEPA responsibilities of other Federal agencies. However, Caltrans may use or adopt other Federal agencies' NEPA analyses consistent with 40 CFR parts 1500–1508, and USDOT and FHWA regulations, policies, and guidance.

3.3.2 The following are specifically excluded from the list in subpart 3.3.1 of highway projects and classes of highway projects:

A. Any highway projects authorized under 23 U.S.C. 202, 203, and 204 unless such projects will be designed and constructed by Caltrans;

B. Any project that crosses State boundaries and any project that crosses or is adjacent to international boundaries. For purposes of this agreement a project is considered "adjacent to international boundaries" if it requires the issuance of a new or the modification of an existing Presidential Permit by the U.S. Department of State.

C. Any Federal-aid highway project that may be designed and constructed by the FHWA under a 23 U.S.C. 308 agreement between the FHWA Central Federal Lands Highway Division and Caltrans.

3.4 Limitations

3.4.1 As provided at 23 U.S.C. 327(e), Caltrans shall be solely responsible and solely liable for carrying out all of the responsibilities it has assumed under part 3 of this MOU.

3.4.2 As provided at 23 U.S.C. 327(a)(2)(D), any highway project or responsibility of the USDOT Secretary that is not explicitly assumed by Caltrans under subpart 3.3.1 in this MOU remains the responsibility of the USDOT Secretary.

PART 4. CERTIFICATIONS AND ACCEPTANCE OF JURISDICTION

4.1 Certifications

4.1.1 Caltrans hereby makes the following certifications:

A. Caltrans has the legal authority to accept all the assumptions of responsibility identified in part 3 of this MOU;

B. Caltrans has the legal authority to take all actions necessary to carry out all of the responsibilities it has assumed under this MOU;

C. Caltrans has the legal authority to execute this MOU;

D. The State of California currently has laws and regulations in effect that are comparable to 5 U.S.C. 552, which are located at California Government Code § 6250, et seq.; and

E. With respect to the public availability of any document under California Government Code § 6250, et seq., any decision regarding its release or public availability may be legally challenged or reviewed in the courts of the State of California.

4.2 State Commitment of Resources

4.2.1 As provided at 23 U.S.C. 327(c)(3)(D), Caltrans will maintain the financial resources necessary to carry out the responsibilities it is assuming. Caltrans believes, and the FHWA agrees, that the financial resources contained in the renewal package appear to be adequate for this purpose. Should the FHWA determine, after consultation with Caltrans, that Caltrans' financial resources are inadequate to carry out the USDOT Secretary's responsibilities, Caltrans will take appropriate action to obtain the additional financial resources needed to carry out these responsibilities. If Caltrans is unable to obtain the necessary additional financial resources, Caltrans shall inform the FHWA, and this MOU will be amended to assign only the responsibilities that are commensurate with Caltrans' financial resources.

4.2.2 Caltrans will maintain adequate organizational and staff capability, including competent and qualified consultants where necessary or desirable, to effectively carry out the responsibilities it has assumed under this MOU. This includes, without limitation:

A. Using appropriate environmental technical, legal, and managerial expertise;

B. Devoting adequate staff resources; and

C. Demonstrating, in a consistent manner, the capacity to perform Caltrans' assumed responsibilities under this MOU and applicable Federal laws.

Should the FHWA determine, after consultation with Caltrans, that Caltrans' organizational and staff capability is inadequate to carry out the USDOT Secretary's responsibilities, Caltrans will take appropriate action to obtain adequate organizational and staff capability to carry out these responsibilities. If Caltrans is unable to obtain adequate organizational and staff capability, Caltrans shall inform the FHWA and the MOU will be amended to assign only the responsibilities that are commensurate with Caltrans' available organizational and staff capability. Should Caltrans choose to meet these requirements, in whole or in part, with consultant services, including outside counsel, Caltrans shall maintain on its staff an adequate number of trained and qualified personnel, including counsel, to oversee the consulting work.

4.2.3 The Caltrans Chief Engineer will serve as the Senior Agency Official consistent with 40 CFR 1508.1(dd); this position must be the one that is equivalent to an Assistant Director of the State DOT or higher. Any changes to the title designation must be provided in writing to the FHWA with a justification.

4.2.4 When carrying out the requirements of Section 106 of the NHPA, as amended, Caltrans staff (including consultants) shall comply with 36 CFR 800.2(a)(1). All actions that involve the identification, evaluation, analysis, recording, treatment, monitoring, or disposition of historic properties, or that involve the reporting or documentation of such actions in the form of reports, forms, or other records, shall be carried out by or under the direct supervision of a person or persons who meet the Secretary of Interior's Professional Qualifications Standards (36 CFR Appendix A to Part 61). Caltrans shall ensure that all documentation required under 36 CFR 800.11 is reviewed and approved by a staff member or consultant who meets the Professional Qualifications Standards.

4.3 Federal Court Jurisdiction

4.3.1 As provided at 23 U.S.C. 327(c)(3)(B), the State of California hereby consents to, and accepts, the exclusive jurisdiction of the Federal courts for the compliance, discharge, and enforcement of any responsibilities of the USDOT Secretary assumed by Caltrans under this MOU. This consent to Federal court jurisdiction shall remain valid after termination of this MOU, or the FHWA's withdrawal of assignment of the USDOT Secretary's responsibilities, for any decision or approval made by Caltrans pursuant to an assumption of responsibility under this MOU. The State of California understands and agrees that this acceptance constitutes a waiver of the State's immunity under the Eleventh Amendment to the U.S. Constitution for the limited purposes of addressing matters arising out of this MOU and carrying out the USDOT Secretary's responsibilities that have been assumed under this MOU.

PART 5. APPLICABILITY OF FEDERAL LAW

5.1 Procedural and Substantive Requirements

5.1.1 As provided at 23 U.S.C. 327(a)(2)(C), in assuming the USDOT Secretary's responsibilities under this MOU, Caltrans shall be subject to the same procedural and substantive requirements that apply to the USDOT Secretary in carrying out these responsibilities, including, but not limited to, environmental justice. Such procedural and substantive requirements include, but are not limited to, Federal statutes and regulations, , Executive Orders issued by the President of the United States, USDOT Orders, Council on Environmental Quality (CEQ) Regulations for Implementing the Procedural Provisions of NEPA (40 CFR 1500 -1508), FHWA Orders, official guidance and policy issued by the CEQ, Office of Management and Budget (OMB), USDOT, or the FHWA (e.g. Guidance Establishing Metrics for the Permitting and Environmental Review of Infrastructure Projects), and any applicable Federal court decisions, and, subject to subpart 5.1.3 below, interagency agreements such as programmatic agreements, memoranda of understanding, memoranda of agreement, and other similar documents that relate to the environmental review process [e.g., the 2015 Red Book – Synchronizing Environmental Reviews for Transportation and Other Infrastructure Projects]. Official USDOT and FHWA formal guidance and policies relating to environmental review matters are posted on the FHWA's website, contained in the FHWA *Environmental Guidebook*, published in the *Federal Register*, or sent to Caltrans electronically or in hard copy.

Caltrans has reviewed the following memoranda and understands that by accepting the FHWA's NEPA responsibilities, it also agrees to perform the FHWA's obligations set forth in these memoranda, consistent with the assigned authorities under this MOU:

- 2014 MOA between the U.S. Coast Guard (USCG) and the FHWA to Coordinate and Improve Bridge Planning and Permitting

- 2014 MOU between USCG, the FHWA, the Federal Transit Administration, and the Federal Railroad Administration to Coordinate and Improve Bridge Planning and Permitting

5.1.2 After the Effective Date of this MOU, the FHWA will use its best efforts to ensure that any new or revised Federal policies and guidance that are final and applicable to the FHWA's responsibilities under NEPA and other environmental laws and that are assumed by Caltrans under this MOU are communicated to Caltrans within ten (10) calendar days of issuance. Delivery may be accomplished by e-mail, Web posting (with email or mail to Caltrans notifying of Web posting), mail, or publication in the Federal Register (with email or mail notifying Caltrans of publication). If communicated to Caltrans by e-mail or mail, such material will be sent to the Chief of Caltrans' Division of Environmental Analysis. In the event that a new or revised FHWA policy or guidance is not made available to Caltrans as described in the preceding sentence, and if Caltrans had no actual knowledge of such policy or guidance, then a failure by Caltrans to comply

with such Federal policy or guidance will not be a basis for termination under this MOU.

5.1.3 Caltrans will work with all other appropriate Federal agencies concerning the laws, guidance, and policies that such other Federal agencies are responsible for administering.

5.1.4 Upon termination of this MOU, the FHWA and Caltrans shall contact the relevant third party to any interagency agreement and determine whether the interagency agreement should be amended or reinstated as in effect on the termination date of this MOU.

5.2 Rulemaking

5.2.1 As provided at 23 U.S.C. 327(f), nothing in this MOU permits Caltrans to assume any rulemaking authority of the USDOT Secretary. Additionally, Caltrans may not establish policy and guidance on behalf of the USDOT Secretary or the FHWA for highway projects covered in this MOU. Caltrans' authority to establish State regulations, policy, and guidance concerning the State environmental review of State highway projects shall not supersede applicable Federal environmental review regulations, formal policy, or guidance established by or applicable to the USDOT Secretary or the FHWA.

5.3 Effect of Assumption

5.3.1 For purposes of carrying out the responsibilities assumed under this MOU, and subject to the limitations contained in 23 U.S.C. 327 and this MOU, Caltrans shall be deemed to be acting as the FHWA with respect to the environmental review, consultation, and other actions required under those responsibilities.

5.4 Other Federal Agencies

5.4.1 As provided at 23 U.S.C. 327(a)(2)(E), nothing in this MOU preempts or interferes with any power, jurisdiction, responsibility, or authority of an agency, other than the USDOT (including the FHWA), under applicable law and regulations with respect to a highway project.

PART 6. LITIGATION

6.1 Responsibility and Liability

6.1.1 As provided in 23 U.S.C. 327(e), Caltrans shall be solely responsible and solely liable for carrying out all of the USDOT Secretary's responsibilities it has assumed under this MOU. The FHWA and USDOT shall have no responsibility or liability for the performance of the responsibilities assumed by Caltrans, including any decision or approval made by Caltrans while participating in the Program.

6.2 Litigation

6.2.1 Nothing in this MOU affects the United States Department of Justice's (hereinafter "DOJ") authority to litigate claims, including the authority to approve a settlement on behalf of the United States if either the FHWA or another agency of the United States is named in such litigation, or if the United States intervenes pursuant to 23 U.S.C. 327(d)(3). In the event the FHWA or any other Federal agency is named in litigation related to matters under this MOU, or the United States intervenes in the litigation, Caltrans agrees to coordinate with DOJ in the defense of that action.

6.2.2 Caltrans shall defend all claims brought in connection with the discharge of any responsibility assumed under this MOU. In the event of litigation, Caltrans shall provide qualified and competent legal counsel, including outside counsel if necessary. Caltrans shall provide the defense at its own expense, subject to 23 U.S.C. 327(a)(2)(G) concerning Federal-aid participation in attorney's fees for outside counsel hired by Caltrans. Caltrans shall be responsible for an opposing party's attorney's fees and court costs if a court awards those costs to an opposing party, or in the event those costs are part of a settlement agreement.

6.2.3 Caltrans will notify the FHWA's California Division Office and DOJ's Assistant Attorney General for the Environment and Natural Resources Division, within seven (7) calendar days of Caltrans Legal Division's receipt of service of process of any complaint, concerning its discharge of any responsibility assumed under part 3 of this MOU. Caltrans' notification to the FHWA and USDOJ shall be made prior to its response to the complaint. In addition, Caltrans shall notify the FHWA's California Division Office within seven (7) calendar days of receipt of any notice of intent to sue concerning its discharge of any responsibility assumed under part 3 of this MOU.

6.2.4 Caltrans will provide the FHWA's California Division Office and DOJ copies of any motions, pleadings, briefs, and other such documents filed in any case concerning its discharge of any responsibility assumed under part 3 of this MOU. Caltrans will provide such copies to the FHWA and DOJ within seven (7) calendar days of receipt of service of any document or, in the case of any documents filed by or on behalf of Caltrans, within seven (7) calendar days of the date of filing.

6.2.5 Caltrans will notify the FHWA's California Division Office and DOJ prior to settling any lawsuit, in whole or in part, and shall provide the FHWA and DOJ with a reasonable amount of time of at least ten (10) calendar days, to be extended, if feasible based on the context of the lawsuit, up to a maximum of thirty (30) total calendar days, to review and comment on the proposed settlement. Caltrans will not execute any settlement agreement until the FHWA and DOJ have provided comments on the proposed settlement, indicated that they will not provide comments on the proposed settlement, or the review period has expired, whichever occurs first.

6.2.6 Within seven (7) calendar days of receipt by Caltrans, Caltrans will provide notice to the FHWA's California Division Office and DOJ of any court decision on the merits, judgment, and notice of appeal arising out of or relating to the responsibilities Caltrans

has assumed under this MOU. Caltrans shall notify the FHWA's California Division Office and DOJ within five (5) calendar days of filing a notice of appeal of a court decision. Caltrans shall confer with the FHWA and DOJ regarding the appeal at least forty-five (45) calendar days before filing an appeal brief in the case.

6.2.7 Caltrans's notifications to the FHWA and DOJ in subparts 6.2.3, 6.2.5, and 6.2.6 shall be made by electronic mail to the FHWA_assignment_lit@dot.gov, and NRSDOT.enrd@usdoj.gov, unless otherwise specified by the FHWA and DOJ. For copies of motions, pleadings, briefs, and other documents filed in a case, as identified in subpart 6.2.4, Caltrans may opt to either send the materials to the email addresses identified above, send hardcopies to the mail address below, or add to the distribution list in the court's electronic filing system (e.g., PACER) the following two email addresses: FHWA_assignment_lit@dot.gov and efile_nrs.enrd@usdoj.gov. The FHWA and DOJ's comments under subpart 6.2.5 and 6.2.6 shall be made by electronic mail to Caltrans Chief Counsel, unless otherwise specified by Caltrans. In the event that regular mail is determined necessary, mail should be sent by overnight mail service to:

For DOJ: Assistant Attorney General for the Environment and Natural Resources Division at 950 Pennsylvania Avenue, NW, Room 2143, Washington, DC, 20530.

For FHWA: Division Administrator for the FHWA California Division, 650 Capitol Mall, Ste. 4-100, Sacramento, CA 95814-4708.

6.3 Conflict Resolution

6.3.1 In discharging any of the USDOT Secretary's responsibilities under this MOU, Caltrans agrees to comply with any applicable requirements of USDOT and the FHWA statute, regulation, guidance or policy regarding conflict resolution. This includes the USDOT Secretary's responsibilities for issue resolution under 23 U.S.C. 139(h), with the exception of the USDOT Secretary's responsibilities under 23 U.S.C. 139(h)(7) regarding financial penalties.

6.3.2 Caltrans agrees to follow 40 CFR 1504 in the event of pre-decision referrals to CEQ for Federal actions determined to be environmentally unsatisfactory. Caltrans also agrees to coordinate and work with CEQ on matters brought to CEQ with regards the environmental review responsibilities for highway projects Caltrans has assumed.

PART 7. INVOLVEMENT WITH OTHER AGENCIES

7.1 Coordination

7.1.1 Caltrans agrees to seek early coordination with all appropriate Federal, State, and local agencies in carrying out any of the responsibilities and highway projects assumed under this MOU.

7.2 Processes and Procedures

7.2.1 Caltrans will ensure that it has appropriate processes and procedures in place that provide for proactive and timely consultation, coordination, and communication with all appropriate Federal agencies in order to carry out any of the responsibilities assumed under this MOU, including the submission of all environmental impact statements together with comments and responses to the Environmental Protection Agency (EPA) as required at 40 CFR 1506.9 and for EPA's review as required by Section 309 of the Clean Air Act. These processes and procedures shall be formally documented. Such formal documentation may be in the form of a formal executed interagency agreement or in other such form as appropriate.

PART 8. INVOLVEMENT WITH THE FHWA

8.1 Generally

8.1.1 Except as specifically provided otherwise in this MOU, the FHWA will not provide any project-level assistance to Caltrans in carrying out any of the responsibilities Caltrans has assumed under this MOU. Project-level assistance shall include any advice, consultation, or document review with respect to the discharge of such responsibility for a particular highway project. However, project–level assistance does not include process or program level assistance as provided in subpart 8.1.4, discussions concerning issues addressed in prior projects, interpretations of any applicable law contained in Titles 23 or 49 of the United States Code, interpretations of any FHWA or USDOT regulation, or interpretations of FHWA or USDOT policies or guidance.

8.1.2 The FHWA will not intervene, broker, act as intermediary, or be otherwise involved in any issue involving Caltrans' consultation or coordination with another Federal agency with respect to Caltrans' discharge of any of the responsibilities it has assumed under this MOU for any particular highway project. However, the FHWA may attend meetings between Caltrans and other Federal agencies and submit comments to Caltrans and the other Federal agency in the following extraordinary circumstances:

A. The FHWA reasonably believes that Caltrans is not in compliance with this MOU;

B. The FHWA determines that an issue between Caltrans and the other Federal agency concerns emerging national policy issues under development by the USDOT; or

C. Upon request by either Caltrans or the other Federal agency and agreement by the FHWA.

The FHWA will notify both Caltrans and the relevant Federal agency prior to attending

any meetings between Caltrans and such other Federal agency.

8.1.3 Other Federal agencies may raise program- or policy-level concerns regarding the compliance by Caltrans with this MOU and may communicate these concerns to the FHWA. The FHWA will review the program- or policy-level concerns and any other information provided to the FHWA by such other Federal agency. If, after such review, the FHWA and such other Federal agency still have concerns regarding Caltrans' compliance, the FHWA will notify Caltrans in a timely manner of the potential compliance issue and will work with both Caltrans and the relevant Federal agency to resolve the issue and, if necessary, take appropriate action to ensure compliance with this MOU.

8.1.4 At Caltrans' request, the FHWA may assist Caltrans in evaluating its environmental program and developing or modifying any of its processes or procedures to carry out the responsibilities it has assumed under this MOU, including, but not limited to, emerging national policy issues, and those processes and procedures concerning Caltrans' consultation, coordination, and communication with other Federal agencies.
8.1.5 Caltrans' obligations and responsibilities under 23 CFR 1.5 are not altered in any way by executing this MOU.

8.2 MOU Monitoring and Oversight

8.2.1 Pursuant to 23 U.S.C. 327(h), the FHWA shall monitor Caltrans' performance in order to ensure Caltrans' compliance with the MOU and all applicable Federal laws and policies as they would apply if these responsibilities were carried out by the USDOT Secretary, and to evaluate whether Caltrans is meeting the performance measures listed in part 10 of the MOU. The FHWA's monitoring program will consist of monitoring reviews, which will be coordinated with Caltrans and take into account Caltrans' self-monitoring and the FHWA California Division's annual risk assessments. Caltrans agrees to comply with all requests from FHWA related to monitoring under this MOU that FHWA reasonably considers necessary to ensure that Caltrans is adequately carrying out the responsibilities assigned to Caltrans.

8.2.2 In order to minimize the impact of the monitoring reviews on Caltrans' day-to-day project delivery workload, the FHWA and Caltrans will coordinate when scheduling joint monitoring reviews. Normally, the FHWA expects to complete two monitoring reviews during the term of the MOU, although the FHWA may conduct additional reviews if deemed necessary. Caltrans and the FHWA California Division Office will each designate a point of contact, who will be responsible for coordinating monitoring review schedules, requests for information and organizing meetings.

8.2.3 In order to evaluate whether Caltrans is meeting the performance measures listed in part 10 of this MOU, Caltrans shall make available for inspection by the FHWA any project files, general administrative files, and letters or comments received from governmental agencies and the public which pertain to Caltrans' discharge of the responsibilities it has assumed under this MOU. Caltrans will work with the FHWA to

provide documents electronically to the extent it does not create an undue burden. Caltrans environmental staff will be available for interviews as part of the monitoring reviews.

8.2.4 Pursuant to 23 U.S.C. 327(c)(4), Caltrans is responsible for providing to the FHWA any information the FHWA reasonably considers necessary to ensure that Caltrans is adequately carrying out the responsibilities assigned. At the request of the FHWA, Caltrans will (within five business days or a mutually agreeable time frame), provide the FHWA with any information the FHWA considers necessary to ensure that Caltrans is adequately carrying out the responsibilities assigned to Caltrans.

8.2.5 Annually from the Effective Date of this MOU, Caltrans shall provide a report to the FHWA California Division Office listing any approvals and decisions Caltrans has made with respect to the responsibilities Caltrans has assumed under part 3 of this MOU. Further, in the report, Caltrans will provide project names, locations, decisions, and any commitments related to mitigation for all analyses, including environmental justice analysis. The information related to commitments will be summarized in the annual report, with more detailed information provided through a hyperlink to the environmental document, for each project that has environmental commitments.

8.2.6 In carrying out the responsibilities assumed under part 3 of this MOU, Caltrans agrees to carry out regular quality assurance and quality control (QA/QC) activities to ensure the assumed responsibilities are being conducted in accordance with applicable laws and this MOU. At a minimum, Caltrans' QA/QC activities will include the review and monitoring of its processes relating to project decisions, environmental analysis, including environmental justice, project file documentation, checking for errors and omissions, legal sufficiency reviews, and taking appropriate corrective action as needed.

8.2.7 Caltrans shall perform annual monitoring of its QA/QC process to determine whether the process is working as intended, to identify any areas needing improvements in the process, and to take any corrective actions necessary to address the areas needing improvement. Caltrans shall transmit a report on the results of this self-monitoring to the FHWA California Division office and make the report available for public inspection.

8.2.8 Monitoring review reports, be they prepared by the FHWA or Caltrans, shall include a description of the scope of the monitoring reviews, the compliance areas reviewed, a description of the monitoring process, a list of areas identified as needing improvement. The FHWA reports shall identify findings that require corrective actions and the Caltrans reports shall discuss corrective actions that have been or will be implemented.

8.2.9 Prior to making any monitoring review report available to the public, the FHWA will transmit to Caltrans a draft of the report and allow Caltrans at least 14 calendar days to respond in writing. The FHWA will grant any reasonable request by Caltrans to extend this response period up to a total of 30 calendar days. The FHWA will review the comments and revise the draft monitoring report, as appropriate.

8.2.10 Caltrans agrees to post all monitoring reports on the Caltrans Division of Environmental Analysis website in order to make them available to the public.

8.3 Record Retention

8.3.1 Caltrans will retain environmental project files and general administrative files pertaining to its discharge of the responsibilities it has assumed under this MOU in accordance with 2 CFR 200.333 and the provisions below.

8.3.2 Except as noted below, Caltrans will retain environmental project records until the end of the third year after the FHWA's final voucher payment for the project is verified. For projects on the State Highway System, final voucher payment is verified when the Certificate of Environmental Compliance (CEC) at Contract Acceptance is signed. For Local Assistance projects, it is verified when the Local Agency Final Inspection Form (FIF) is signed.

A. **Environmental Assessments and Environmental Impact Statements**

The following shall be retained:

- Signed draft environmental documents (except for DEISs, the retention period shall be a minimum of 8 years, or at least 3 years from when the CEC or FIF is signed, whichever is later)
- Signed final environmental documents, including the following (except for FEISs, the retention period shall be a minimum of 8 years, or at least 3 years from when the CEC or FIF is signed, whichever is later):
  - Section 7 Biological Opinion(s) and letter(s) of concurrence
  - Section 106 MOA
  - Air quality conformity determination
  - Section 4(f) de minimis finding(s) and/or evaluation
  - FONSI or ROD
- Final technical reports, as applicable, including:
  - Hydrology report
  - Location hydraulic analysis
  - Floodplain risk assessment
  - Initial site assessment
  - Preliminary site assessment
  - Air quality report
  - Air quality conformity analysis

- Noise study report (Shall be maintained for a minimum of 4 years and at least 3 years from the CEC or FIF approval as identified above, whichever length of time is longer)
- Noise abatement decision report (Shall be maintained for a minimum of 4 years and at least 3 years from the CEC or FIF approval as identified above, whichever length of time is longer)
- Environmental justice analysis
- Natural environment study
- Biological assessment(s)
- Wetland delineation
- Community impact assessment
- Relocation impact report
- Traffic study
- Visual resources study
- Historic properties survey report including required appendices (Archaeological Survey Report and Historic Resources Evaluation Report)

- Federal environmental permits including those related to:

  - Section 404 of the Clean Water Act
  - Section 10 of the Rivers and Harbors Act
  - Title 14, Division 5.5, Chapter 5, Sec. 13300 et seq (local or state coastal development permits)

- Environmental Commitment Record

- Signed Certificate of Environmental Compliance at Contract Acceptance

B. Categorical Exclusions

The following shall be retained:

- Signed CE/CE Determination form

- Final technical studies, as applicable, identified above

- Environmental permits, as applicable, identified above

- Environmental commitment record

- Signed Certificate of Environmental Compliance at Contract Acceptance

8.4 Federal Register

8.4.1 For any documents to be published in the Federal Register, such as the Notice of Intent under 23 CFR 771.123(a) and Notice of Final Agency Action under 23 U.S.C. 139(l), Caltrans shall transmit such document to the FHWA's California Division Office, and the FHWA will cause such document to be published in the Federal Register on behalf of Caltrans and will submit such document to the Federal Register within five calendar days of receipt of such document from Caltrans. To the extent that the operating procedures of the Government Printing Office and the Federal Register permit, Caltrans will take over the procedures described above from the FHWA California Division Office.

8.5 Data and Information Requests

8.5.1 Caltrans agrees to provide data and information requested by the FHWA and resource agencies for the preparation of national reports, the Federal Permitting Dashboard, and other purposes that the Secretary reasonably considers necessary to ensure that Caltrans is adequately carrying out the responsibilities assigned to Caltrans and to the extent that the information relates to determinations, findings, and proceedings associated with projects processed under this MOU. Such data and information requests may include but are not limited to:

A. Information on the completion and time for completion of NEPA environmental documentation of all types (EIS, EA, CE);

B. Archeology Reports requested by the National Park Service;

C. ESA Expenditure Reports requested by the U.S. Fish and Wildlife Service and the National Marine Fisheries Service;

D. NEPA Litigation Reports requested by the CEQ;

E. Environmental Conflict Resolution reports, requested by the OMB, and the CEQ;

F. Project status and information for EAs and EISs for use on the searchable website maintained under section 41003(b) of the FAST Act [Fixing America's Surface Transportation Act, 42 U.S.C. 4370m-2(b) and 23 U.S.C. 139(o)] (Federal Permitting Dashboard) to be submitted in accordance with current and any future reporting standard issued by USDOT pursuant to such provisions;

G. Environmental information for all EAs and EISs subject to this MOU. Such information shall include, but is not limited to all known environmental justice concerns identified during the environmental process;

H. Any such information that may be requested by the FHWA Administrator

8.6 Conformity Determinations

8.6.1 Pursuant to 23 U.S.C. 327(a)(2)(B)(iv)(II), for any project requiring a project–level conformity determination under the Federal Clean Air Act and its implementing regulations, the FHWA's California Division Office will document the project level conformity determination by transmitting a letter to Caltrans to be included in the Final EIS or EA. The FHWA's California Division Office will restrict its review to only that data, analyses, applicable comments and responses, and other relevant documentation that enable the FHWA to make the project level conformity determination. For CE projects that have not been assumed pursuant to the 326 CE MOU, Caltrans shall rely upon the FHWA for the project level conformity determinations. Caltrans shall rely upon a documented FHWA project-level conformity determination prior to approval of the CE by Caltrans.

8.7 Certification of NEPA Compliance

8.7.1 For projects funded by the FHWA, prior to the execution of any Federal–aid project agreement for a physical construction contract, a design-build contract, or a contract for final design services, the Director of Caltrans will submit a certification for each individual project to the FHWA California Division Office specifying that Caltrans has fully carried out all responsibilities assumed under this MOU in accordance with this MOU and applicable Federal laws, regulations, and policies. The Director of Caltrans may delegate the certification required under this subpart to other qualified and duly authorized Caltrans personnel.

8.8 Enforcement

8.8.1 Should the FHWA determine that Caltrans is not in compliance with this MOU, then the FHWA shall take appropriate action to ensure Caltrans' compliance, including appropriate remedies provided at 23 CFR 1.36 for violations of or failure to comply with Federal law or the regulations in 23 CFR 771 with respect to a project, withdrawing assignment of any responsibilities that have been assumed as provided in part 9 of this MOU, or terminating Caltrans' participation in the Program as provided in part 12 of this MOU.

PART 9. WITHDRAWAL OF RESPONSIBILITIES OF ASSIGNED PROJECTS

9.1 FHWA-Initiated Withdrawal of Assigned Projects

9.1.1 The FHWA may, at any time, withdraw the assignment of all or part of the

USDOT Secretary's responsibilities that have been assumed by Caltrans under this MOU for any highway project or highway projects upon the FHWA's determination that:

A. With respect to that particular highway project or those particular highway projects, Caltrans is not in compliance with a material item of this MOU or applicable Federal laws or policies; and, after receiving reasonable notice and an opportunity to take corrective action, Caltrans has not taken sufficient corrective action to the satisfaction of the FHWA;

B. The highway project or highway projects involve significant or unique national policy interests for which Caltrans' assumption of the Secretary's responsibilities would be inappropriate, including instances where the FHWA receives a complaint under Title VI of the Civil Rights Act of 1964 involving a project that is subject to this MOU and the FHWA accepts the complaint for investigation or determines that the project may have significant negative community impacts ; or

C. Caltrans cannot satisfactorily resolve an issue or concern raised in a government–to–government consultation process, as provided in subpart 3.2.3.

9.1.2 Upon the FHWA's determination to seek to withdraw assignment of the USDOT Secretary's responsibilities under subpart 9.1.1, the FHWA will notify Caltrans of the FHWA's determination. After notifying Caltrans of its determination, the FHWA will provide Caltrans written notice of its determination including the reasons for its determination. Upon receipt of this notice, Caltrans may submit any comments or objections to the FHWA within 30 calendar days, unless an extended period of time is agreed to by the FHWA. Upon receipt of Caltrans' comments or objections, the FHWA will make a final determination within 30 calendar days, unless extended by the FHWA for cause, and notify Caltrans of its decision. In making its determination, the FHWA will consider Caltrans' comments or objections, the effect the withdrawal of assignment will have on the Program, amount of disruption to the project concerned, the effect on other projects, confusion the withdrawal of assignment may cause to the public, the potential burden to other Federal agencies, and the overall public interest. Following its final determination, when FHWA withdraws assignment for any project or projects, FHWA will assume sole responsibility and liability for the decisions and approvals it has re-assumed for the project or projects based on such determination. However, Caltrans will remain responsible for other decisions and approvals for the project or projects, which FHWA has not reassumed responsibility or liability for, such as decisions and approvals beyond the scope of the USDOT Secretary's responsibilities under NEPA and related Federal environmental laws.

9.1.3 The FHWA shall withdraw assignment of the responsibilities Caltrans has assumed for any highway project when the preferred alternative that is identified in the environmental assessment or final environmental impact statement is a highway project that is specifically excluded in subpart 3.3.2. In such case, subpart 9.1.2 shall not apply.

9.2 Caltrans-Initiated Withdrawal of Assignment of Projects

9.2.1 Caltrans may, at any time, request the FHWA to withdraw all or part of the USDOT Secretary's responsibilities it has assumed under this MOU for any existing or future highway project or highway projects.

9.2.2 Upon Caltrans' decision to request the FHWA withdraw the assignment of the USDOT Secretary's responsibilities under subpart 9.2.1; Caltrans shall informally notify the FHWA of its desire for the FHWA to withdraw assignment of its responsibilities. After informally notifying the FHWA of its desire, Caltrans will provide the FHWA written notice of its desire, including the reasons for wanting the FHWA to withdraw assignment of the responsibilities. Upon receipt of this notice, the FHWA will have 30 calendar days, unless extended by the FHWA for cause, to determine whether it will withdraw assignment of the responsibilities requested. In making its determination, the FHWA will consider the reasons Caltrans desires the FHWA to withdraw assignment of the responsibilities, the effect the withdrawal of assignment will have on the Program, amount of disruption to the project concerned, the effect on other projects, confusion the withdrawal of assignment may cause to the public, the potential burden to other Federal agencies, and the overall public interest.

PART 10. PERFORMANCE MEASURES

10.1 General

10.1.1 Both the FHWA and Caltrans have determined that it is desirable to mutually establish a set of performance measures that the FHWA can take into account in its evaluation of Caltrans' administration of the responsibilities it has assumed under this MOU.

10.1.2 Caltrans' attainment of the performance measures indicated in this part 10 will be considered through FHWA monitoring, which is required for the FHWA to comply with 23 U.S.C. 327.

10.1.3 Caltrans shall collect and maintain all necessary and appropriate data related to the attainment of the performance measures. In collecting this data, Caltrans shall monitor its progress toward meeting the performance measures and include its progress in the monitoring report provided under subpart 8.2.5 of this MOU. Caltrans shall make the monitoring report available to the FHWA and the public as provided in subpart 8.2.7.

10.2 Performance Measures

10.2.1 The performance measures applicable to Caltrans in carrying the responsibilities it has assumed under part 3 of this MOU are as follows:

A. Compliance with NEPA and other Federal laws and regulations:

i. Maintain documented compliance with procedures and processes set forth in the MOU for the environmental responsibilities assumed under the Program.
ii. Maintain documented compliance with requirements of all Federal statutes and regulations being assumed as provided in section 3.2.1 of this MOU.

B. Quality Control and Assurance for NEPA decisions:

i. Maintain and apply internal quality control and assurance measures and processes, including a record of:
   a. Legal sufficiency determinations made by counsel;
   b. Compliance with FHWA and Caltrans environmental document content standards and procedures, including those related to QA/QC; and
   c. Completeness and adequacy of documentation of project records for projects done under the Program.

C. Relationships with agencies and the general public:

i. Assess change in communication among Caltrans, Federal and state resource agencies, and the public resulting from assumption of responsibilities under this MOU.
ii. Maintain effective responsiveness to substantive comments received from the public, agencies and interest groups on NEPA documents and environmental concerns.
iii. Maintain effective NEPA conflict resolution processes whenever appropriate.
iv. Ensure meaningful public engagement, including with environmental justice communities.

D. Increased efficiency and timeliness in completion of NEPA process:

i. Compare time of completion for NEPA approvals before and after assumption of responsibilities under this MOU.
ii. Compare time to completion for key interagency consultation formerly requiring FHWA participation (e.g., Section 7 biological opinions) before and after assumption of responsibilities under this MOU.

PART 11. TRAINING

11.1 Training

11.1.1 The FHWA will provide Caltrans available training, to the extent the FHWA and Caltrans deem necessary, with respect to the environmental responsibilities that Caltrans has assumed. Such training may be provided by either the FHWA or another Federal agency or other parties as may be appropriate. Caltrans agrees to have all appropriate employees (including consultants hired for the purpose of carrying out the USDOT Secretary's responsibilities) attend such training.

11.1.2 A training plan will be updated annually by Caltrans and the FHWA during the term of this MOU. While Caltrans and the FHWA may take other agencies' recommendations into account in determining training needs, Caltrans and the FHWA will jointly determine the training required under this MOU.

PART 12. TERM, TERMINATION AND RENEWAL

12.1 Term

12.1.1 This MOU has a term of ten years from the Effective Date.

12.2 Termination by the FHWA

12.2.1 As provided at 23 U.S.C. 327(j)(1), the FHWA may terminate Caltrans' participation in the Program, in whole or in part, at any time subject to the procedural requirements in 23 U.S.C. 327 and subpart 12.2.2 below. Failure to adequately carry out the responsibilities of the Program may include, but not be limited to:

A. Persistent neglect of, or noncompliance with, any Federal laws, regulations, and policies;

B. Failure to cooperate with the FHWA in conducting any oversight or monitoring activity;

C. Failure to secure or maintain adequate personnel and financial resources to carry out the responsibilities assumed;

D. Substantial noncompliance with this MOU; or

E. Persistent failure to adequately consult, coordinate, and/or take the concerns of other relevant Federal and state agencies into account in carrying out the responsibilities assumed.

12.2.2 If the FHWA determines that Caltrans is not adequately carrying out the responsibilities assigned to Caltrans, then:

A. The FHWA shall provide to Caltrans a written notification of its non-compliance determination detailing a description of each responsibility in need of corrective action regarding an inadequacy identified.

B. Caltrans shall have a period of not less than 120 days to take such corrective action as the FHWA determines to be necessary to comply with this MOU.

C. If, after the notification and the period to take corrective action Caltrans has failed to take satisfactory corrective action as determined by the FHWA, the FHWA shall provide Caltrans with a notice of termination. Any responsibilities identified to be terminated in the notice that have been assumed by Caltrans pursuant to this MOU shall transfer to the FHWA.

12.3 Termination by Caltrans

12.3.1 Caltrans may terminate its participation in the Program, in whole or in part, at any time by providing to the FHWA a notice at least 90 calendar days prior to the date that Caltrans seeks to terminate its participation in this Program, and subject to such terms and conditions as the FHWA may provide.

12.3.2 The California State Legislature may, at any time, terminate Caltrans participation in the Program by withdrawing the State's consent to Federal court jurisdiction and waiver of sovereign immunity or taking any other legislative action withdrawing authority to Caltrans to participate in the Program.

12.3.3 The FHWA and Caltrans shall have a plan to transition the responsibilities that Caltrans has assumed back to the FHWA in the event that Caltrans' participation in the program is terminated. This plan shall be developed to minimize disruption to projects, confusion to the public, and burdens on other affected Federal, State, and local agencies. The plan shall be approved by both the FHWA and Caltrans.

12.4 Validity of Caltrans' Actions

12.4.1 Any environmental approvals made by Caltrans pursuant to the responsibilities Caltrans has assumed under this MOU shall remain valid after termination of Caltrans' participation in the Program or withdrawal of assignment by the FHWA. As among the USDOT Secretary, the FHWA and Caltrans, and in accordance with subpart 4.3.1 and part 6, Caltrans shall remain solely responsible and solely liable for any environmental approvals it makes pursuant to any of the responsibilities it has assumed while participating in the Program.

12.5 Renewal

12.5.1 This MOU is renewable in accordance with 23 U.S.C. 327 and 23

CFR 773.115.

A. Caltrans shall notify the FHWA at least 12 months before the expiration of this MOU of its intent to renew its participation in the Program.

B. Prior to requesting renewal, Caltrans shall coordinate with the FHWA to determine if significant changes have occurred or if new assignment responsibilities are being sought that would warrant a statewide notice and opportunity for public comment prior to Caltrans' submittal of the renewal package.

C. Caltrans shall meet the requirements in 23 CFR 773.115(c); and

D. Caltrans shall submit the renewal package no later than 180 days prior to the expiration date of the MOU.

PART 13. AMENDMENTS

13.1 Generally

13.1.1 This MOU may be amended at any time upon mutual agreement by both the FHWA and Caltrans pursuant to 23 CFR 773.113(b).

13.2 Additional Projects, Classes of Projects and Environmental Review Responsibilities

13.2.1 Caltrans may assume responsibility for additional projects and additional environmental review responsibilities beyond those identified in part 3 of this MOU by executing an amendment to this MOU.

13.2.2 Should Caltrans decide to request this MOU be amended to add responsibility for additional projects or classes of projects, or additional environmental review responsibilities beyond those identified in part 3 of this MOU, then such request shall be treated as an amendment to Caltrans' renewal package that was submitted to the FHWA pursuant to 23 U.S.C. 327 and 23 CFR 773.115. In developing the amendment, Caltrans shall identify the additional responsibilities and projects it wishes to assume and make any appropriate adjustments to the information contained in Caltrans' renewal package, including the verification of personnel and financial resources. Upon receipt of Caltrans' amendment, the FHWA will consult with, and solicit the views of, other appropriate Federal agencies.

PART 14. IMPLEMENTATION OF NONENVIRONMENTAL LAWS

14.1 Generally

14.1.1 It is recognized and understood that the FHWA remains responsible for implementing other laws, requirements and policies that are not assumed by Caltrans under this MOU, or other MOUs and agreements, with respect to highway projects. This includes, but is not limited to, laws, requirements and policies related to Interstate access, right-of-way (including advance acquisition of right-of-way), value engineering, design, and other areas related to such projects. The FHWA's implementation of such laws, requirements and policies should be consistent with Caltrans' analyses and decisions, if any, that are made pursuant to the responsibilities assumed under this MOU.

14.1.2 Nothing in the MOU prevents or otherwise limits the FHWA's ability to ask Caltrans for information or clarification regarding any NEPA or other environmental decision or analysis made or conducted by Caltrans under this MOU for any highway project.

14.1.3 The FHWA's requests for such information or clarification do not change Caltrans' responsibility and liability for such decisions and analyses under this MOU.

14.1.4 Should FHWA determine that further action is necessary with respect to Caltrans compliance with the responsibilities it has assumed under this MOU, the FHWA may request that Caltrans take appropriate action and will give Caltrans a reasonable period of time to respond. The FHWA may also take action to reassume responsibilities for such project if the FHWA deems appropriate as provided for under Part 9 of this MOU.

14.2 Title VI of the Civil Rights Act of 1964

14.2.1 Although Title VI is not part of NEPA, the public has the right to file a Title VI complaint. The FHWA's responsibilities with respect to such complaints, as well as other issues related to Title VI compliance that have been identified by the FHWA, may require the FHWA to ask Caltrans for information or clarification regarding any NEPA or environmental decision or analysis made or conducted by Caltrans under this MOU for any highway project.

14.2.2 Caltrans agrees to comply with all requests from FHWA related to monitoring under this MOU. Title VI investigations involving highway projects subject to this MOU may result in additional monitoring in accordance with this MOU.

IN WITNESS THEREOF, the parties hereto have caused this MOU to be duly executed in duplicate as of the date of the last signature written below. This MOU is effective on the Effective Date as specified in subpart 1.1.3.

Date: 5-27-22

Stephanie Pollack
Deputy Administrator
Federal Highway Administration

Date: 5-26-22

Steven Keck
Acting Director
California Department of Transportation

Date: 5/24/22

Erin Holbrook
Chief Counsel

For California Department of Transportation only as to the certifications required under subpart 4.1.1 of this MOU and as to form.

Attachment 4
FHWA Programmatic Section 4(f) for Historic Bridges

Federal Transportation Authorizations

NEPA Implementation

Other Federal Legislation

Section 4(f)

Search by Topic

Staff Directory

Send Us Feedback About the Website

Section 4(f)

Programmatic Section 4(f) Evaluation and Approval for FHWA Projects that Necessitate the Use of Historic Bridges

This statement sets forth the basis for a programmatic Section 4(f) approval that there are no feasible and prudent alternatives to the use of certain historic bridge structures to be replaced or rehabilitated with Federal funds and that the projects include all possible planning to minimize harm resulting from such use. This approval is made Pursuant to Section 4(f) of the Department of Transportation Act of 1966, 49 U.S.C. 303, and Section 18(a) of the Federal-Aid Highway Act of 1968 23 U.S.C. 138.

Use

The historic bridges covered by this programmatic Section 4(f) evaluation are unique because they are historic, yet also part of either a Federal-aid highway system or a state or local highway system that has continued to evolve over the years. Even though these structures are on or eligible for inclusion on the National Register of Historic Places, they must perform as an integral part of a modern transportation system. When they do not or cannot, they must be rehabilitated or replaced in order to assure public safety while maintaining system continuity and integrity. For the purpose of this programmatic Section 4(f) evaluation, a proposed action will "use" a bridge that is on or eligible for inclusion on the National Register of Historic Places when the action will impair the historic integrity of the bridge either by rehabilitation or demolition. Rehabilitation that does not impair the historic integrity of the bridge as determined by procedures implementing the national Historic Preservation Act of 1966, as amended (FHWA), is not subject to Section 4(f).

Applicability

This programmatic Section 4(f) evaluation may be applied by the Federal Highway Administration (FHWA) to projects which meet the following criteria:

1. The bridge is to be replaced or rehabilitated with Federal funds.
2. The project will require the use of a historic bridge structure which is on or is eligible for listing on the National Register of Historic Places.
3. The bridge is not a National Historic Landmark.
4. The FHWA Division Administrator determines that the facts of the project match those set forth in the sections of this document labeled Alternatives, Findings, and Mitigation.
5. Agreement among the FHWA, the State Historic Preservation Officer (SHPO), and the Advisory Council on Historic Preservation (ACHP) has been reached through procedures pursuant to Section 106 of the NHPA.

Alternatives

The following alternatives avoid any use of the historic bridge:

1. Do nothing.
2. Build a new structure at a different location without affecting the historic integrity of the old bridge, as determined by procedures implementing the NHPA.
3. Rehabilitate the historic bridge without affecting the historic integrity of the structure, as determined by procedures implementing the NHPA.

This list is intended to be **all-inclusive**. The programmatic Section 4(f) evaluation does not apply if a reasonable alternative is identified that is not discussed in this document. The project record must clearly demonstrate that each of the above alternatives was fully evaluated and it must further demonstrate that all applicability criteria listed above were met before the FHWA Division Administrator concluded that the programmatic Section 4(f) evaluation applied to the project.

Findings

In order for this programmatic Section 4(f) evaluation to be applied to a project, each of the following findings must be supported by the circumstances, studies, and consultations on the project:

1. **Do Nothing**. The do nothing alternative has been studied. The do nothing alternative ignores the basic transportation need. For the following reasons this alternative is not feasible and prudent:

   a. Maintenance - The do nothing alternative does not correct the situation that causes the bridge to be considered structurally deficient or deteriorated. These deficiencies can lead to sudden collapse and potential injury or loss of life. Normal maintenance is not considered adequate to cope with the situation.

   b. Safety - The do nothing alternative does not correct the situation that causes the bridge to be considered deficient.

   Because of these deficiencies the bridge poses serious and unacceptable safety hazards to the traveling public or places intolerable restriction on transport and travel.

2. **Build on New Location Without Using the Old Bridge**. Investigations have been conducted to construct a bridge on a new location or parallel to the old bridge (allowing for a one- way couplet), but, for one or more of the following reasons, this alternative is not feasible and prudent:

   a. Terrain - The present bridge structure has already been located at the only feasible and prudent site, i.e., a gap in the land form, the narrowest point of the river canyon, etc. To build a new bridge at another site will result in extraordinary bridge and approach engineering and construction difficulty or costs or extraordinary disruption to established traffic patterns.

   b. Adverse Social , Economic, or Environmental Effects - Building a new bridge away from the present site would result in social, economic, or environmental impact of extraordinary magnitude. Such impacts as extensive severing of productive farmlands, displacement of a significant number of families or businesses, serious disruption of established travel patterns, and access and damage to wetlands may individually or cumulatively weigh heavily against relocation to a new site.

   c. Engineering and Economy - Where difficulty associated with the new location is less extreme than those encountered above, a new site would not be feasible and prudent where cost and engineering difficulties reach extraordinary magnitude. Factors supporting this conclusion

include significantly increased roadway and structure costs, serious foundation problems, or extreme difficulty in reaching the new site with construction equipment. Additional design and safety factors to be considered include an ability to achieve minimum design standards or to meet requirements of various permitting agencies such as those involved with navigation, pollution, and the environment.

d. Preservation of Old Bridge - It is not feasible and prudent to preserve the existing bridge, even if a new bridge were to be built at a new location. This could occur when the historic bridge is beyond rehabilitation for a transportation or an alternative use, when no responsible party can be located to maintain and preserve the bridge, or when a permitting authority, such as the Coast Guard requires removal or demolition of the old bridge.

3. **Rehabilitation Without Affecting the Historic Integrity of the Bridge**. Studies have been conducted of rehabilitation measures, but, for one or more of the following reasons, this alternative is not feasible and prudent:

   a. The bridge is so structurally deficient that it cannot be rehabilitated to meet minimum acceptable load requirements without affecting the historic integrity of the bridge.

   b. The bridge is seriously deficient geometrically and cannot be widened to meet the minimum required capacity of the highway system on which it is located without affecting the historic integrity of the bridge. Flexibility in the application of the American Association of State Highway and Transportation Officials geometric standards should be exercised as permitted in 23 CFR Part 625 during the analysis of this alternative.

Measures to Minimize Harm

This programmatic Section 4(f) evaluation and approval may be used only for projects where the FHWA Division Administrator, in accordance with this evaluation, ensures that the proposed action includes all possible planning to minimize harm. This has occurred when:

1. For bridges that are to be rehabilitated, the historic integrity of the bridge is preserved, to the greatest extent possible, consistent with unavoidable transportation needs, safety, and load requirements;
2. For bridges that are to be rehabilitated to the point that the historic integrity is affected or that are to be moved or demolished, the FHWA ensures that, in accordance with the Historic American Engineering Record (HAER) standards, or other suitable means developed through consultation, fully adequate records are made of the bridge;
3. For bridges that are to be replaced, the existing bridge is made available for an alternative use, provided a responsible party agrees to maintain and preserve the bridge; and
4. For bridges that are adversely affected, agreement among the SHPO, ACHP, and FHWA is reached through the Section 106 process of the NHPA on measures to minimize harm and those measures are incorporated into the project. This programmatic Section 4(f) evaluation does not apply to projects where such an agreement cannot be reached.

Procedures

This programmatic Section 4(f) evaluation applies only when the FHWA Division Administrator:

1. Determines that the project meets the applicability criteria set forth above;
2. Determines that all of the alternatives set forth in the Findings section have been fully evaluated;
3. Determines that use of the findings in this document that there are no feasible and prudent alternatives to the use of the historic bridge is clearly applicable;
4. Determines that the project complies with the Measures to Minimize Harm section of this document;
5. Assures that implementation of the measures to minimize harm is completed; and
6. Documents the project file that the programmatic Section 4(f) evaluation applies to the project on which it is to be used.

Coordination

Pursuant to Section 4(f), this statement has been coordinated with the Departments of the Interior, Agriculture, and Housing and Urban Development.

Issued on: July 5,1983 Approved: /Original Signed By/ Ali F. Sevin, Director Office of Environmental Policy Federal Highway Administration

Attachment 5
Programmatic Section 4(f) Evaluation for the Project

Garrapata Creek Bridge Rail Replacement Project

05-MON-1-PM 63.0

Garrapata Creek Bridge Rail Replacement, located along the Big Sur Coast in Monterey County

PROGRAMMATIC SECTION 4(F) EVALUATION

Submitted Pursuant to:

49 USC 303

THE STATE OF CALIFORNIA

Department of Transportation as assigned

4.29.21
Date of Approval

Jason Wilkinson
Jason Wilkinson
Senior Environmental Planner

The environmental review, consultation, and any other action required in accordance with applicable Federal laws for this project is being, or has been, carried-out by Caltrans under its assumption of responsibility pursuant to 23 USC 326.

Introduction

Section 4(f) of the Department of Transportation Act of 1966, codified in federal law at 49 USC 303, declares that “it is the policy of the United States Government that special effort should be made to preserve the natural beauty of the countryside and public park and recreation lands, wildlife and waterfowl refuges, and historic sites.”

Section 4(f) specifies that the Secretary [of Transportation] may approve a transportation program or project . . . requiring the use of publicly owned land of a public park, recreation area, or wildlife and waterfowl refuge of national, State, or local significance, or land of an historic site of national, State, or local significance (as determined by the federal, state, or local officials having jurisdiction over the park, area, refuge, or site) only if:

- there is no prudent and feasible alternative to using that land; and
- the program or project includes all possible planning to minimize harm to the park, recreation area, wildlife and waterfowl refuge, or historic site resulting from the use.

Description of Proposed Project and Alternatives

Project Description

Caltrans proposes to replace the deteriorated nonstandard concrete baluster bridge rail and approach railing on the Garrapata Creek Bridge (Number 44-0018) on State Route 1 in Monterey County, approximately 11.3 miles south of Carmel-By-The-Sea to ensure the safety and reliability of State Route 1. The Garrapata Creek Bridge structure is eligible for listing on the National Register of Historic Places (NRHP) and is located within the Carmel-San Simeon State Highway Historic District (CSSHHD) as well as within the Coastal Zone.

Garrapata Creek Bridge (Number 44-0018) is an open-spandrel arch bridge that was constructed in 1931, widened in 1998 and seismically retrofitted in 1987 and 1998. The bridge sits at post mile 63.0 just south of Carmel in Monterey County and is one of seven historic arch bridges along State Route 1 on the Big Sur Coast. The bridge is 285 feet long and consists of 12-foot lanes with zero to 1-foot shoulders.

The structure has nonstandard concrete baluster bridge rails on both sides of the structure. The rail end posts exhibit fine pattern cracking, and the barrier rail posts are severely deteriorated with dozens of spalls (flaking areas) and spalled posts, in addition to previous impact damage.

Construction would remove the existing rail along with the existing 1-foot overhang on each side of the bridge deck and widen the deck 3 inches on each

side to place the new standard rails. No work would occur in Garrapata Creek. Debris from removal of the existing rail and overhang would be kept from entering Garrapata Creek by either affixing a debris containment system to falsework hung from the top of the bridge or using an excavator with a bucket designed to catch the debris.

All work would be conducted within the existing state right-of-way, and access below the bridge would be restricted to foot traffic only, so no equipment access roads would be necessary. There are no utility conflicts.

Project Alternatives

One Build Alternative and a No-Build Alternative are being evaluated for this project. The alternatives under consideration for the project were developed by an interdisciplinary project development team with the goal of adequately addressing the project purpose and need while avoiding and minimizing environmental impacts and reducing project costs.

Build Alternatives

The current Build Alternative would involve replacing the existing nonstandard bridge rail and approach railing with a new railing that meets current traffic safety standards. The Build Alternative would involve evaluation of 2 bridge rail types and aesthetic treatments to implement context sensitive design solutions. A context sensitive design approach uses a collaborative, interdisciplinary decision-making process that involves all stakeholders to develop a transportation facility that fits its physical setting.

No Build Alternative

Under the No-Build Alternative, the historic Big Sur Bridge rails would not be replaced and would continue to deteriorate. Under the No-Build Alternative, the bridge rails would remain nonstandard.

Alternatives Considered but Eliminated from Further Discussion

Caltrans considered multiple alternatives to avoid or minimize adverse effects to the bridge. To be considered viable, project alternatives must address the project purpose and need: The purpose of the project is to replace the existing concrete baluster bridge rail and approach rail with a rail that meets current traffic safety standards. The bridge is historic as well as visually significant to the traveling public, so the project design must address context-sensitive solutions. The following alternatives were considered but rejected because they either could not meet the purpose and need of the project or were determined not to be feasible.

No Build Alternative

The no build alternative was considered but rejected because it does not meet the purpose and need of the project to replace the existing nonstandard concrete baluster bridge rail and approach rail with a rail that meets current MASH crashworthiness safety standards. The existing rails do not meet MASH standards, and portions of the rails are currently deteriorated and in need of replacement. The rails are experiencing concrete spalling, exposed steel reinforcing bar, and corrosion caused by exposure to salts in the air due to the bridge's location near the ocean. This deterioration may pose a hazard to public health and safety in the future if allowed to continue unaddressed. Therefore, replacement of the existing rails is necessary for safety purposes as well as to preserve the continued function of the Garrapata Creek Bridge, extending its service life.

Replacement of Rails In-Kind Alternative

Caltrans investigated all possible alternatives that would avoid adversely affecting the bridge, including replacing the rails in-kind in a manner that would meet the Secretary of the Interior's Standards for the Treatment of Historic Properties. However, the replacement of the rails in kind was rejected because it does not meet the purpose and need of the project to replace the existing bridge rail and approach rail with a rail that meets current traffic safety standards. The dimensions of the existing railings do not meet MASH crashworthiness standards; therefore, in kind replacements would not meet MASH standards.

Replacement of Rails with Type C411 / Reduction of Speed Limit to 45 mph

Caltrans also considered the possibility of lowering the speed limit in order to replace the rails with the Type C411, a design that is more aesthetically similar to the bridge's original rail design. The Type C411 rail is rated only for speeds up to 45 mph (TL-2 rating). The replacement of the rails with the Type C411 railing was considered but rejected after a speed survey on the Garrapata Creek Bridge was completed and determined that a reduction of the speed limit was not a feasible option. The results from a vehicle speed survey completed in December 2019 demonstrated that the speeds were higher than anticipated; at the 85th percentile speeds were 58 mph. This data informs the Caltrans project development team that the replacement railing must be designed for crashworthiness at the TL-4 rating, which is designed for vehicles travelling greater than 45 mph. As the Type C411 railing would not meet that standard, it does not meet the purpose and need of the project.

Purpose and Need

Purpose

The purpose of the Garrapata Creek Bridge Rail Replacement Project is to replace the existing nonstandard concrete baluster bridge rails and approach rails with rails that meets current state and federal traffic safety standards. Caltrans will choose a new Manual for Assessing Safety Hardware-compliant railing that is both context sensitive and compatible with the historic and visual character of the Big Sur Bridges and within the Carmel-San Simeon Highway Historic District (CSSHHD).

Need

Garrapata Creek Bridge Rail Replacement Project is needed because the existing rails do not meet current state and federal traffic safety standards, and portions of the existing Garrapata Creek Bridge rails have developed severe cracking caused by deterioration of concrete and reinforcing steel. According to the 2015 Bridge Inspection Report for Garrapata Creek Bridge, portions of the existing rail are in an accelerated state of deterioration, with concrete spalling and exposed steel reinforcing bar. This deterioration may pose a hazard to public health and safety moving forward if allowed to continue unaddressed.

Description of Section 4(f) Property

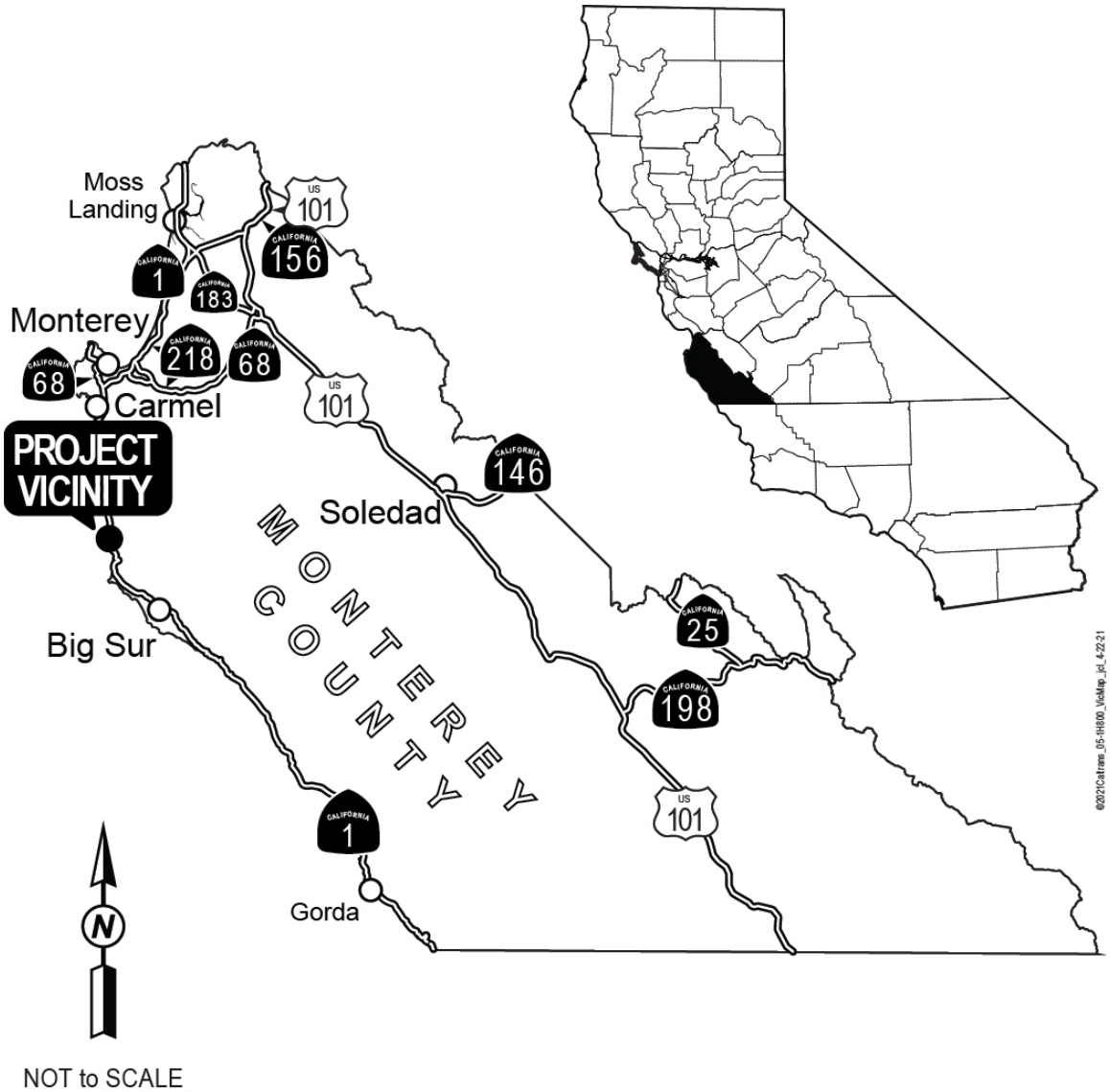

The project area is located on SR 1 along the Big Sur coast of Central California, an area characterized by the rugged terrain of the Santa Lucia Mountains, which descend steeply down on the west to the Pacific Ocean. The western slope is cut by numerous rivers, creeks, and canyons of varying widths and depths, such as Garrapata Creek. The shoreline is generally rocky with a few sandy beaches; coastal terraces are few. The Big Sur region does not have any census designated places, but at a few locations, such as Big Sur Village, Gorda, and Lucia, are small settlements that usually include tourist service businesses such as restaurants, gas stations, and lodging. There are two historic properties located within the APE for the Garrapata Creek Bridge Rail Replacement Project: the Garrapata Creek Bridge (Bridge No. 44-0018), which was determined eligible for the NRHP in 1986, and the CSSHHD, which was determined eligible for the

NRHP in 1996 with SHPO concurrence in 2003 and updates in 2006. The Garrapata Creek Bridge is also a contributing resource in the CSSHHD.

The Garrapata Creek Bridge (#44 0018), located at post mile 63.0 on Highway 1 in Monterey County, is a reinforced concrete, open spandrel, fixed parabolic arch bridge with a single arch span comprised of parallel concrete arch ribs measuring 150 feet long. It was determined eligible for listing NRHP and in the CRHR in 1986 under Criterion A/1 (in the area of transportation) for its association with the Highway Beautification Movement and construction of the Carmel-San Simeon Highway as well as Criterion C/3 as an example of reinforced concrete bridge design and engineering from the 1920s-30s. The bridge's character-defining features include its use of reinforced concrete materials; its open spandrel, fixed parabolic arch; its six concrete T-beam approach spans; its decorative cantilevered walkway; and the decorative reinforced concrete railings with arched window design and smooth textured finish. The historic resource boundary for the bridge is the structure itself.

The total bridge length is 285 feet and includes seven approach spans (five 25-foot spans and two 5-foot spans) in addition to the 150-foot arch span. The height of the bridge is approximately 85 feet above the creek bed. The reinforced concrete arch ribs measure five feet in thickness at the springing line, narrowing to three feet in thickness at the crown. The bridge deck is 28 feet wide, including a 24-foot, two-lane roadway with curbs. The bridge railings are smooth reinforced concrete in an arched window design. The bridge was seismically retrofitted in 1987 and 1998.

The Garrapata Creek Bridge was constructed in 1931 by the Hanrahan Construction Company of San Francisco for the California Division of Highways Bridge Department under the leadership of Charles Andrew. The resident engineer was O.R. Bosso. The Garrapata Creek Bridge was the first concrete arch bridge constructed on the scenic Carmel-San Simeon Highway, which was constructed between 1922 and 1938 along one of the most rugged and previously inaccessible areas of the California coastline.

The Garrapata Creek Bridge is one of seven iconic concrete arch bridges known as the "Big Sur Arches" located on Highway 1 along the coast of the Pacific Ocean in Monterey County. The other six bridges include the Bixby Creek, Rocky Creek, Big Creek, Granite Canyon, Malpaso Creek, and Wildcat Creek Bridges. All seven concrete arch bridges were determined individually eligible for listing in the NRHP and in the CRHR in 1986 by Caltrans historian Stephen Mikesell. In addition, the bridges are included as contributing resources in the Carmel-San Simeon Highway Historic District, which was determined eligible for listing in the NRHP and the CRHR in 1996 Caltrans architectural historian Robert Pavlik and updated by JRP Historical Consultants in 2006.

Impacts on Section 4(f) Property

Impacts discussed in this section will be related to the preferred alternative.

The Garrapata Creek Bridge Rail Replacement Project proposes to replace the bridge railing and approach railing with new rails that meet current MASH safety standards. After analysis of the potential effects of this undertaking on the Garrapata Creek Bridge and the CSSHHD, Caltrans finds that the project causes an adverse effect on the Garrapata Creek Bridge and does not adversely affect the CSSHHD. the project will alter the original railings of the Garrapata Creek Bridge and introduce new visual elements that will diminish some aspects of the historic integrity of the property. The effect of changing the railing on one of the seven bridges, one of 241 contributing elements to the historic district, is a minimal effect on the district. This project will not diminish the integrity of its overall character as a 75-mile long discontinuous district with hundreds of discrete elements, and does not impede the CSSHHD's ability to convey its historic significance.

The proposed project will impact the following resources associated with the 4(f) property:

Visual- The new bridge rail would be the same height but would have smaller openings and less of a "see-through" appearance. Other potential visual changes associated with the project may include an increase in paved surfaces, grading and earthwork, new longer guardrail and concrete anchor blocks adjacent to the bridge, change from wooden posts to metal posts, and vegetation removal. Many of the proposed elements would block or reduce visual access to coastal scenic vistas and scenic resources as seen from State Route 1, an Officially Designated State Scenic Highway and National Scenic byway.

The existing visual quality and character of the Big Sur Coast is based to a large degree on its rugged topography and coastline, sweeping ocean views, historic structure, undeveloped setting, and native vegetation patterns. The highway itself reinforces the overall rugged and rural character because of its curvilinear alignment and generally narrow appearance.

Local, state and federal planning documents base the high visual quality of this route mostly on the striking views of the ocean, the dramatic topography, the native vegetative patterns, and the relatively natural character of the roadside environment. Within the project limits, each of the bridges is historic and iconic scenic features of the California coast. The proposed project would change the visual character at the project location. Loss of important architectural elements would fundamentally alter the visual experience of travelling the Big Sur Coast along State Route 1. In addition, the overall effect of these changes would be a more engineered looking, slightly larger scale, more contemporary highway facility.

Noise- Since no capacity will be added to the highway and the profile of the highway will be the same after construction, this would be considered a Type 3 project, it is assumed that local noise levels will be the same after completion of the project as they were before. Long-term noise abatement measures are not anticipated with this project.

Temporary (Construction) Impacts:
It is inevitable that local noise levels in the vicinity of any given location will experience a short-term increase due to construction activities. The amount of construction noise will vary with the particular activities associated with each location and the models and types of equipment used by the contractor. Caltrans policy states that normal construction equipment should not emit noise levels greater than 86-dBA at 50-feet from the source during nighttime operations.

Vegetation- Following construction, areas of temporary disturbance to natural habitats would be stabilized and revegetated; these include areas supporting coastal scrub. Permanent erosion control, planting, or a combination of both would be used to vegetate all temporarily impacted areas. The Caltrans Landscape Architecture Division would prepare erosion control and planting plans in coordination with the project biologist. Permanent erosion control seed would consist of a mix of species native to the area. Areas of temporarily disturbed coastal scrub would be replaced in-kind.

Wildlife- Garrapata Creek is federally designated critical habitat for the south-central California coast steelhead, but this habitat would not be affected by the project. All work would be conducted well outside of the jurisdictional areas of the creek. Permanent impacts are not anticipated with the project.

Applicability of Programmatic Section 4(f)

Historic Bridges Programmatic Section 4(f)

The proposed use of the Garrapata Creek Bridge satisfies the requirements for use of a Programmatic Section 4(f) Evaluation for FHWA projects that necessitate the use of historic bridges by meeting the following criteria:

- The bridge is to be rehabilitated with Federal funds.
- The project requires the use of a historic bridge, which is listed or eligible for listing in the NRHP.
- The bridge is not a National Historic Landmark
- Agreement between Caltrans and the SHPO about the historic bridge is reached through the NHPA Section 106 consultation process.

Implementation of the preferred alternative would result in the replacement of the Garrapata Creek Bridge Rails. The resource is a historic bridge that has been determined to be eligible for the National Register of Historic Places (NRHP). It is not a National Historic Landmark. Retrofitting the bridge rails or replacing the rails in-kind is not feasible.

A Programmatic Section 4(f) Evaluation cannot be used for projects that require an Environmental Impact Statement (EIS). The project does not cross a threshold that would require preparation of an EIS in 23 CFR 771.115. x The State Historic Preservation Office (SHPO) must concur in writing with the assessment of impacts and proposed mitigation. The SHPO has concurred with the Section 106 Finding of Adverse Effect in December 2020 and with the mitigation measures proposed in the Memorandum of Agreement in March 2021.

Avoidance Alternatives and Other Findings

1. **Do Nothing**. The do nothing alternative has been studied. The do nothing alternative ignores the basic transportation need. For the following reasons this alternative is not feasible and prudent:

    a. Maintenance - The do nothing alternative does not correct the situation that causes the bridge rail to be considered structurally deficient or deteriorated. These deficiencies can lead to sudden collapse and potential injury or loss of life. Normal maintenance is not considered adequate to cope with the situation.

    b. Safety - The do nothing alternative does not correct the situation that causes the bridge rail to be considered deficient.

Because of these deficiencies the bridge rails pose serious and unacceptable safety hazards to the traveling public.

2. **Build on New Location Without Using the Old Bridge**. Investigations have been conducted to construct a bridge on a new location or parallel to the old bridge (allowing for a one- way couplet), but, for one or more of the following reasons, this alternative is not feasible and prudent:
    - Terrain - The present bridge structure has already been located at the only feasible and prudent site. To build a new bridge at another site will result in extraordinary bridge and approach engineering and construction difficulty or costs or extraordinary disruption to established traffic patterns.
    - Preservation of Old Bridge - It is not feasible and prudent to preserve the existing bridge, even if a new bridge were to be built at a new location.

3. **Rehabilitation Without Affecting the Historic Integrity of the Bridge**. Studies have been conducted of rehabilitation measures, but, for one or more of the following reasons, this alternative is not feasible and prudent:

    - The bridge rail is so structurally deficient that it cannot be rehabilitated to meet acceptable traffic safety requirements without affecting the historic integrity of the bridge.

Measures to Minimize Harm to the Section 4(f) Property

- For bridges that are to be rehabilitated to the point that the historic integrity is affected or that are to be moved or demolished, the FHWA ensures that, in accordance with the Historic American Engineering Record (HAER) standards, or other suitable means developed through consultation, fully adequate records are made of the bridge.

    - Caltrans has complied with this procedure through the Finding of Adverse Effect Determination and Memorandum of Agreement with the State Historic Preservation Office. HAER photographic and written documentation will be completed as part of the mitigation.

- For bridges that are adversely affected, agreement among the SHPO, ACHP, and FHWA is reached through the Section 106 process of the NHPA on measures to minimize harm and those measures are incorporated into the project. This programmatic Section 4(f) evaluation does not apply to projects where such an agreement cannot be reached.

    - Caltrans has reached agreement with the SHPO. The SHPO concurred with the Finding of Adverse Effect in December 2020 and approved the mitigation measures proposed in the Memorandum of Agreement in March 2021.

Caltrans has made extensive efforts to minimize the adverse effect to the greatest extent feasible. Caltrans structures design engineers designed a new rail type (Type 86H) specifically to replicate the design of the historic concrete bridge rails as closely as possible while still meeting MASH standards. In addition, Caltrans also considered concrete rail designs from other states, including the Type C412 rail design from the Texas Department of Transportation, which was also designed to replace historic baluster rails. Although the concrete railings, an original character-defining feature of the bridge, will be replaced, the overall adverse effect on the bridge will be minimal, and the bridge will retain its eligibility for NRHP and CRHR listing. The project will diminish some aspects of the bridge's integrity including its design, workmanship, and feeling; however, the structure's integrity of location, setting, materials, and association will not be diminished.

- **In terms of design**, integrity will be diminished as the original dimensions of the bridge railing will be altered by the project. As a result of developing

a railing that is compliant with the current MASH standards as defined by AASHTO, the replacement railings will have smaller openings and a larger base and baluster. This change in the physical dimensions of the railing will diminish integrity of design. However, the overall design of the bridge's massive substructure, including the 150-foot arches and 285-foot span over the canyon, will not be affected.

- **In terms of workmanship**, integrity will be diminished as the original concrete rails and end treatments to be removed by the project will be replaced with modern precast elements.
- **In terms of feeling**, integrity will be somewhat diminished as the original more minimal concrete railing evokes a sense of time for drivers, pedestrians, or bicyclists who experience the bridge. The appearance of these original railings is in keeping with other concrete arch bridges constructed in the 1920s and 30s; therefore, the bridge's integrity of feeling will diminish as the rails are replaced with modern ones.
- **In terms of location**, the bridge will retain its integrity as it will remain in its original location.
- **In terms of materials,** the bridge will retain integrity as the replacement concrete rails will employ compatible concrete materials to the original bridge.
- **In terms of setting,** the bridge will retain integrity as the project does not propose to alter the iconic coastal setting, and this project will only result in the direct impact of replacing the original bridge railing.
- **In terms of association**, the bridge will retain integrity as it will continue to function as a highway bridge in this location on Highway 1 along the Big Sur Coast. Additionally, the bridge will retain its historical association with the construction of the highway and will remain a contributing element to the CSSHHD.

Although the railings will be altered, the Garrapata Creek Bridge will remain both individually eligible for the NRHP and a contributing feature of the CSSHHD after completion of the project.

In addition, replacing the original rails with ones that meet current safety standards ensures that the bridge itself remains in use in its original function as a bridge along Highway 1 on the Big Sur Coast. Ensuring that the bridge remains functional for its original historical purpose helps to ensure continuing preservation of the structure and longevity of its use in the future.

Mitigation under NHPA Section 106

A. Historic American Engineering Record (HAER)

- Prior to the start of construction, Caltrans shall contact the regional Historic American Building Survey/Historic American Engineering Record/Historic American Landscape Survey (HABS/HAER/HALS) coordinator at the National Park Service Interior Regions 8, 9, 10, and

12 Regional Office (NPS) to request that NPS stipulate the level of and procedures for completing the documentation. Within ten (10) days of receiving the NPS stipulation letter, Caltrans shall send a copy of the letter to all consulting parties for their information.

- Caltrans will ensure that all recordation documentation activities are performed or directly supervised by architects, historians, photographers, and/or other professionals meeting the qualification standards in the Secretary of Interior's Professional Qualification Standards (36 CFR 61, Appendix A).

- Upon receipt of the NPS written acceptance letter, Caltrans will make archival, digital and bound library-quality copies of the documentation and provide them to the Monterey County Historic Resources Review Board, the Monterey County Historical Society, the Big Sur Historical Society, the Carmel Heritage Society, the California Office of Historic Preservation, the Central Coast Information Center, and the California State Library.

- Caltrans shall notify SHPO that the documentation is complete, and all copies distributed, as outlined in Stipulation II.3, and include the completion of the documentation in the annual report. All field surveys shall be completed prior to the start of construction.

B. Completion of DPR Inventory Form

- Caltrans District 5 will hire qualified historical consultants to produce a DPR 523 form, including Primary Record Forms and Building Structure, and Object Record Forms for the Garrapata Creek Bridge.

- The information in the individual DPR 523 form will focus solely on the individual bridge, its specific historic design context and will highlight each resource's specific history within the broader contextual landscape of social, economic, and cultural trends leading to the opening of State Route 1 (SR-1) in Monterey County. This measure responds directly to comments received from consulting parties, and particularly by The Monterey County Historic Resources Review Board (MCHRRB) in their November 2020 letter to Caltrans regarding the Garrapata Creek Bridge Rail Replacement Project.
- The DPR 523 form will include information such as high-quality color and/or black-and-white photographs, historic photographs and/or drawings as appropriate, and text describing the bridge's history and character-defining features.

- Caltrans District 5 will distribute paper and digital copies of the DPR 523 inventory form to the Office of Historic Preservation; the California Room of the California State Library; Caltrans District 5; and Caltrans Headquarters Library and History Center as well as with all relevant consulting parties, including the Monterey County Historic Resources Review Board, the Monterey County Historical Society, the Big Sur Historical Society, the Carmel Heritage Society and the Historic Bridge Foundation on request.

C. Lesson Plans

- Caltrans District 5 will hire qualified consultants to develop and produce a lesson plan for elementary school aged students that focuses on historic significance of the bridge designs using Scientific, Technological, Engineering, or Mathematical (STEM) activities. The materials will include visual aids and activities that demonstrate the technical significance of the open spandrel concrete arch design.

- All components of the lesson plan will meet the *Next Generation Science Standards* (NGSS) which (in *APPENDIX I – Engineering Design in the NGSS)* encourage an emphasis on engineering design for newly developed science curricula. They will also meet the *History-Social Science Standards* as defined by the California Department of Education (CDE) to the extent they are applicable to the activities developed.

- The lesson plan will be hosted on the interpretive website, which can be further used as a resource to highlight the historic significance of the bridge as an important engineering achievement.

- Caltrans will engage with the Monterey County Office of Education and the Monterey County Free Library System for distribution of the materials in order to ensure they are utilized and provide a benefit to the local community.

D. Interpretive Website

- Caltrans District 5 will produce a website highlighting the history of Garrapata Creek Bridge as well as the other six (6) Big Sur Arches in a manner that is accessible to the general public and provides public benefit.

- The website will initially contain a main page focusing on the general history of the seven bridges, as well as at least one (1) page focusing on the Garrapata Creek Bridge individually. The website will also include pages to host the historic and modern photographs, the historic context, the lesson plans, and additional information on the engineering and transportation history of the bridges as is deemed appropriate through future studies. The website will be structured so that it may be updated and expanded with additional pages that focus on the Big Sur Arches impacted through the future bridge rail replacement projects outlined in the current Tier 1 analysis or any other projects impacting the Big Sur Arches.

- The website will be maintained for at least ten (10) years, and it is recognized that this time frame may be continually extended as additional projects mentioned in the Tier 1 analysis are proposed and implemented over time.

Coordination

1. PUBLIC PARTICIPATION

As part of the Historic Property Survey Report (HPSR) prepared for this project in September 2020, Caltrans sent notification letters to local interested parties asking for comments on the proposed project on August 31st, 2020. Recipients of the letter were the Monterey County Historical Society, Big Sur Historical Society, Carmel Heritage Society, The Historic Bridge Foundation, and the Monterey County Historic Resources Review Board. This notification was sent via Email and US Postal Service mail on August 31st, 2020 and follow-up email reminders were sent to all consulting parties on September 21st, 2020. Caltrans reengaged parties with a stated participatory interest in the project, including the Big Sur Historical Society and The Monterrey County Historic Resources Review Board, on December 10th, 2020 with a notice of the determination of adverse effect and mitigation proposal.

1.1 Monterey County Historic Resources Review Board (MCHRRB)

On September 21st, 2020 Caltrans PQS Architectural Historian Daniel Leckie spoke with Monterey County Planner Craig Spencer on behalf of the Monterey County Historic Resources Review Board (MCHRRB) over the phone and explained the upcoming bridge rail replacement project, as well as additional future bridge rail replacement projects anticipated along SR-1 in Monterey County. The MCHRRB added the Garrapata Creek Bridge Rail Replacement Project to their monthly board meeting agenda on October 1st, 2020. Caltrans PQS Architectural Historians Daniel Leckie and Lindsay Kozub attended the meeting and presented the project to the board. A follow-up meeting was held on October 20th, 2020 to finalize board comments, and a formal letter detailing concerns with the project, including project justification, evaluation and documentation, environmental review and the replacement rail design was issued on November 7th, 2020. Representatives from Monterey County and the MCHRRB, including Mr. Spencer,

were also present for the December 8th 2020 public meeting which, due to the current COVID-19 pandemic provisions, took place via WebEx video conferencing software. To date, the MCHRRB has brought forth specific concerns as follows:

- **Project justification:** The MCHRRB expressed desire for a greater understanding of the need for the bridge rail replacement. Including:
  - An in-depth review and discussion with FHWA on consideration of historic architecture as a means to compliance with MASH and ASHTO standards;
  - Details on the condition of the existing bridge rails, including photographic evidence.
  - Review of Highway speeds and potential reduction of speed for each bridge as a means of providing flexibility in design solutions for reinforcement, replacement in kind, or design of the replacement rails (if needed).
  - A detailed discussion of why typical historic preservation building standards are not possible in this situation with documentation of efforts on coordination with FHWA and highway speeds.

- **Evaluation and documentation**: The MCHRRB believes review of the project would benefit from more detailed plans and documentation including but not limited to:
  - Elevations and photographs that show the interior and exterior views of the existing bridge rails including features of the rail that reflect the vertical structural elements of the bridge;
  - Original drawings for the bridge and railing if available.
  - Detail the full cross section of the rail and bridge deck; and
  - Detailed historic analysis and report for each bridge prepared by a qualified historian.

- **Environmental Review:** The MCHRRB supports Caltrans decision to prepare an Environmental Impact Report. The MCHRRB believes the EIR should consider at a minimum:
  - Cumulative considerations of rail replacement for ***all six*** historic bridges.
  - Alternatives analysis including a no project alternative.
  - Highway speed reductions given circumstances occurring at each bridge; Historic Preservation design and engineering standard exceptions; and options to repair and reinforce the existing rails or replace in kind; and
  - Effects on historic resources (defining features of the bridges); effects on the critical viewshed in Big Sur; and compatibility with the Coastal Act, Big Sur Land Use Plan and Coast Highway Management Plan.

- **Replacement Rail Design**: If replacement of the bridge rails is determined to be necessary, the MCHRRB reserves the ability to review and comment upon each bridge's rail designs, prior to selection of a final design. These are the MCHRRB's *preliminary* comments on potential new bridge rail designs:

- The MCHRRB suggests Caltrans work with the local community as well as Monterey County to design bridge rails to fit the character of the structures and the surroundings. The County suggests the community members should include Big Sur Coast Multi-Agency Advisory Council (BSMAAC), and the local Big Sur Land Use Advisory Committee (LUAC). Monterey County is willing to set these discussions on those agencies' agendas.
- The MCHRRB prefers the "C411" rail design for replacement. Although the C411 design is engineered for speeds of up to 45 miles per hour, the MCHRRB believes some bridges warrant reduced speeds where there are curves or heavily used turnouts which slow traffic near the bridges.
- The MCHRRB believes travelers along the Highway would rather slow down to enjoy the beautiful views rather than seeing the visual shock of foreign elements which impact bridges' character
- The MCHRRB asks that Caltrans coordinate with the county on the final bridge rail design.
- The MCHRRB requests final design options be presented to Monterey County with sufficient flexibility to amend the design before a final designed is selected.

As stated above, Caltrans sent a subsequent letter to the MCHRRB on December 10th, 2020 notifying them of the determination of adverse effect for this project as well as the current proposed section 106 mitigation measures. Any suggestions or concerns of the board have been considered in the final Memorandum of Agreement (MOA). Caltrans has responded to the MCHRRB's concerns and provided all requested information that is currently available. Caltrans will continue to consult with all interested parties throughout the project process and provide additional information, including mitigation documents and updated plans as they come available.

1.2 Big Sur Historical Society

On September 28th, 2020 Caltrans received a response from Mary Trotter of the Big Sur Historical Society expressing concern with the project including compatibility of the new railing design with the historic bridges, concrete coloring, and impacts to the historic structure overall. Caltrans responded clarifying some aspects of the overall process and reasoning for the project as well as an explanation of the efforts made to develop a compatible bridge railing. Ms. Trotter also attended the December 8th, 2020 public meeting. The Big Sur Historical Society has raised the following concerns, which have been summarized by Caltrans staff, about the upcoming project:

- Sur Historical Society acknowledges that the rails have begun to deteriorate but is unhappy with the repairs made to date including poor color matching making repairs stand out from the original railing.
  - Incompatible design for the new rails to the original structure:
  - The Big Sur Historical Society Feels that the new designs appear like "Romanesque elements on a Gothic cathedral".
  - The archways are heavy, bulky and overwhelmingly solid

    - Archways in some of the renderings appear as rectangular spaces.
    - Archways emphasize the structure rather than the openings between.
        - ***Note:*** *the design details in the initial renderings have been updated since the initial letter was sent to consulting parties, demonstrating additional options for arched openings. The final design details of the final railing will not be determined until Caltrans is farther along in the design process.*
- Questions on what safety hazard the original railings pose to the traveling public.
    - Unaware of the accident history along this stretch
- Given Caltrans history of community involvement in the decision-making process, the Big Sur Historical Society feels it should be possible for state and federal to reach a compromise about changes to historic structures.
- Expressing hope that the railings could be replaced with the exact same design, perhaps beefed up on the interior with more or larger diameter rebar.
- Taking issue with the color match, which is said to have originally come from use of local sand in the concrete mixture, which was incompatible in the initial renderings.
    - ***Note:*** *the color in the initial renderings has been updated since the initial letter was sent to consulting parties, demonstrating a more appropriate color match. The original renderings appeared with a darker gray concrete coloring, but they now appear more in keeping with the original sandy beige bridge color. The final coloring, along with other design details of the final railing will not be determined until Caltrans is farther along in the design process. Caltrans is committed to designing the new railing with as close of a color match as possible in the final design for the replacement railings.*
- Concern that the NRHP/CRHR eligibility designation should have more "meaning and strength" to oppose these changes.

As stated above, Caltrans has reengaged this group with a notice of determination of adverse effect for this project as well as the current proposed section 106 mitigation measures, and any suggestions have been considered in the final Memorandum of Agreement (MOA).

1.3 All Other Consulting Parties

On September 21st, 2020 Caltrans PQS Architectural Historian Daniel Leckie spoke with Kitty Henderson, the Executive Director of the Historic Bridge Foundation over the phone and provided more information on the project. However, on October 9th, Ms. Henderson declined to formally respond to the project for personal family reasons. On September 22nd, 2020 Caltrans received a response from James Perry, Executive Director of the Monterey County Historical Society expressing no concerns with the project. The Carmel Heritage Society has not replied to the initial letter or reminder email to date.

- ***Caltrans District 5 Website***

  Caltrans provides information on the project on the District 5 website at https://dot.ca.gov/caltrans-near-me/district-5/district-5-current-projects/05-1h800.

Letters and Other Correspondence

See attachments for the FAE and MOA with SHPO.

Attachment 6
2019 MASH Implementation Memo

State of California
DEPARTMENT OF TRANSPORTATION

California State Transportation Agency

Memorandum

Making Conservation a California Way of Life

To: DISTRICT DIRECTORS

Date: November 12, 2019

From: STEVE TAKIGAWA
Deputy Director
Maintenance and Operations

CORY BINNS
Acting Deputy Director
Project Delivery

Subject: **MASH COMPLIANCE PLAN AND POLICY**

On December 23, 2016, the California Department of Transportation (Caltrans) established a timeline for implementation of roadside safety hardware and evaluation of new products under the Manual for Assessing Safety Hardware (MASH). The plan set specific dates when Caltrans will no longer allow the installation of non-MASH compliant safety devices.

If one or more Caltrans approved MASH compliant safety devices are available for a specific need, Caltrans must use the safety device(s) even if it may require a sole source contract. If a situation arises where a MASH compliant safety device is not available to address a specific need, Caltrans must use a National Cooperative Highway Research Program (NCHRP) Report 350 approved safety device. If a NCHRP Report 350 device is not available, Caltrans must use engineering judgement to address the specific need.

For cases when either a NCHRP Report 350 device or engineering judgement is used for traffic safety devices, the engineer must consult with the District Traffic Safety Devices Coordinator. The engineer must then document the decision in the project history file.

These requirements apply to all projects and work done on the State highway system.

The MASH compliant safety hardware approved by Caltrans can be found at: <https://dot.ca.gov/programs/traffic-operations/mash>

For further questions regarding this process for traffic safety devices, please contact Duper Tong, Chief, Office of Traffic Engineering at (916) 654-5176 or by e-mail at <Duper.Tong@dot.ca.gov>. For bridge rails, transitions, sign supports and other breakaway hardware, contact Joel Magana, Chief, Office of Design and Technical Services at (916) 227-8018 or by e-mail at <Joel.Magana@dot.ca.gov>.

c: Jasvinderjit S. Bhullar, Chief, Division of Traffic Operations
Dennis T. Agar, Chief, Division of Maintenance
Rachel Falsetti, Chief, Division of Construction
Janice Benton, Chief, Division of Design
Thomas A. Ostrom, Chief, Division of Engineering Services
Dara Wheeler, Chief, Division of Research, Innovation and System Information
Duper Tong, Chief, Office of Traffic Engineering
Joel Magana, Chief, Office of Design and Technical Services

Attachment 7
MASH Roles and Responsibilities Memo

U.S. Department of Transportation
Federal Highway Administration

Memorandum

Subject: **INFORMATION:** Clarification of Roles and Responsibilities in Implementing the American Association of State Highway and Transportation Officials (AASHTO) / Federal Highway Administration (FHWA) Joint Implementation Agreement on the AASHTO *Manual for Assessing Safety Hardware* (MASH)

Date: MAR 17 2017

From: Elizabeth Alicandri
Associate Administrator for Safety

In Reply Refer To:
HSA-1

To: Division Administrators
Directors of Field Services
Federal Lands Highway Division Engineers

Purpose

Since the distribution of the AASHTO/FHWA joint implementation agreement for AASHTO MASH, we have received many questions on how FHWA and AASHTO are moving forward with the joint implementation agreement. This memo describes the different roles and responsibilities of FHWA and AASHTO since the transition from the National Cooperative Highway Research Program (NCHRP) Report 350 testing criteria to AASHTO's MASH criteria.

Background

In 2015, roadway departure fatalities accounted for 18,695 highway fatalities. The implementation of the AASHTO MASH will help make roads safer and lessen the severity of roadway departure crashes. The AASHTO MASH, updated in 2016, provides AASHTO's first officially adopted crash-testing procedures for use in assessing roadside hardware. Until AASHTO MASH, NCHRP 350 - *Recommended Procedures for the Safety Performance Evaluation of Highway Features*, was the primary reference. FHWA accepted the responsibility for clarifying and providing guidance for the NCHRP 350 report. The NCHRP 350 report is now superseded by the AASHTO MASH.

Responsibilities

In December 2015, the AASHTO/FHWA joint implementation agreement for AASHTO MASH was successfully balloted by AASHTO's Standing Committee on Highways and approved by FHWA. The agreement will help encourage the application of the newest and safest generation of roadside hardware. Per the agreement:

- *"AASHTO Technical Committee for Roadside Safety (TCRS) will continue to be responsible for developing and maintaining the evaluation criteria adopted by AASHTO."*
- *"FHWA will continue its role in issuing letters of eligibility of roadside safety hardware for federal-aid reimbursement."*

As noted above from the agreement, the AASHTO TCRS is responsible for developing and maintaining the evaluation criteria in AASHTO MASH. The FHWA will continue to provide technical assistance on roadside hardware to the AASHTO TCRS. Ultimately, the decision to make changes to the AASHTO MASH resides with AASHTO.

The FHWA will continue its role issuing letters of eligibility for roadside safety hardware that have been evaluated using AASHTO's MASH testing guidelines and criteria. Questions pertaining to the FHWA Federal-aid Eligibility Reimbursement Process or issuance of eligibility letters should be addressed to the FHWA Office of Safety.

Please note FHWA no longer issues new eligibility letters for roadside safety hardware tested under NCHRP 350. FHWA's Federal-aid eligibility letters are provided *as a service* to the States and are not a requirement for roadside safety hardware to be eligible for Federal-aid reimbursement. As stated in our eligibility letter, "eligibility for reimbursement under the Federal-aid highway program does not establish approval, certification or endorsement of the device for any particular purpose or use." It is the States' responsibility to determine whether or not to use a particular hardware device and how to use it for their particular situation.

AASHTO TCRS and FHWA will evaluate and monitor the availability of MASH-compliant devices and will revisit the implementation agreement as needed. Since the original implementation agreement was balloted by AASHTO, changes to the agreement will also be balloted by AASHTO and approved by FHWA.

Summary

Please share this memorandum with your State DOT. For more information about the AASHTO/FHWA Joint MASH Implementation Agreement, please visit https://safety.fhwa.dot.gov/roadway_dept/countermeasures/reduce_crash_severity/policy_memo_guidance.cfm. If you have any questions, please contact Will Longstreet at (202)366-0087 or Menna Yassin at (202)366-2833.

Attachment 8
Speed Study Results

LIDAR MOTOR VEHICLE SPEED SURVEY
FIELD TALLY SHEET

County: Monterey | Route: 1 | Postmile: 62.97

From: 05-MON-01-PM 62.97 | Direction: Northbound

To: 05-MON-01-PM 62.97 | Observer: Juan Lezo

ADT: XXXX | Weather: Overcast

Posted Speed: 55 MPH | Date: 11/19/2019 | Day: Tuesday | Time: 12:20 PM

Speed (MPH)	NUMBER OF VEHICLES																												Total
75																													
74																													
73																													
72																													
71																													
70																													
69																													
68																													
67																													
66																													
65	X																												1
64	X																												1
63																													
62																													
61																													
60	X																												1
59	X	X																											2
58	X	X	X																										3
57																													
56	X	X	X																										3
55	X	X	X	X	X																								5
54	X	X	X																										3
53	X	X	X	X	X																								5
52	X	X	X																										3
51	X	X	X	X																									4
50	X	X	X	X																									4
49	X	X	X	X	X																								5
48	X	X	X	X	X	X																							6
47	X	X	X	X																									4
46	X	X	X																										3
45	X	X																											2
44																													
43	X	X	X																										3
42	X																												1
41																													
40	X																												1
39																													
38																													
37																													
36																													
35																													
																												Total Number of Vehicles	60

CALIFORNIA DEPARTMENT OF TRANSPORTATION

LIDAR MOTOR VEHICLE SPEED SURVEY
FIELD TALLY SHEET

County: Monterey | Route: 1 | Postmile: 62.970

From: 05-MON-01-PM 62.97 | Direction: Northbound

To: 05-MON-01-PM 62.97 | Observer: Juan Lezo

ADT: XXXX | Weather: Overcast

Posted Speed: 55 MPH | Date: 11/19/2019 | Day: Tuesday | Time: 12:20 PM

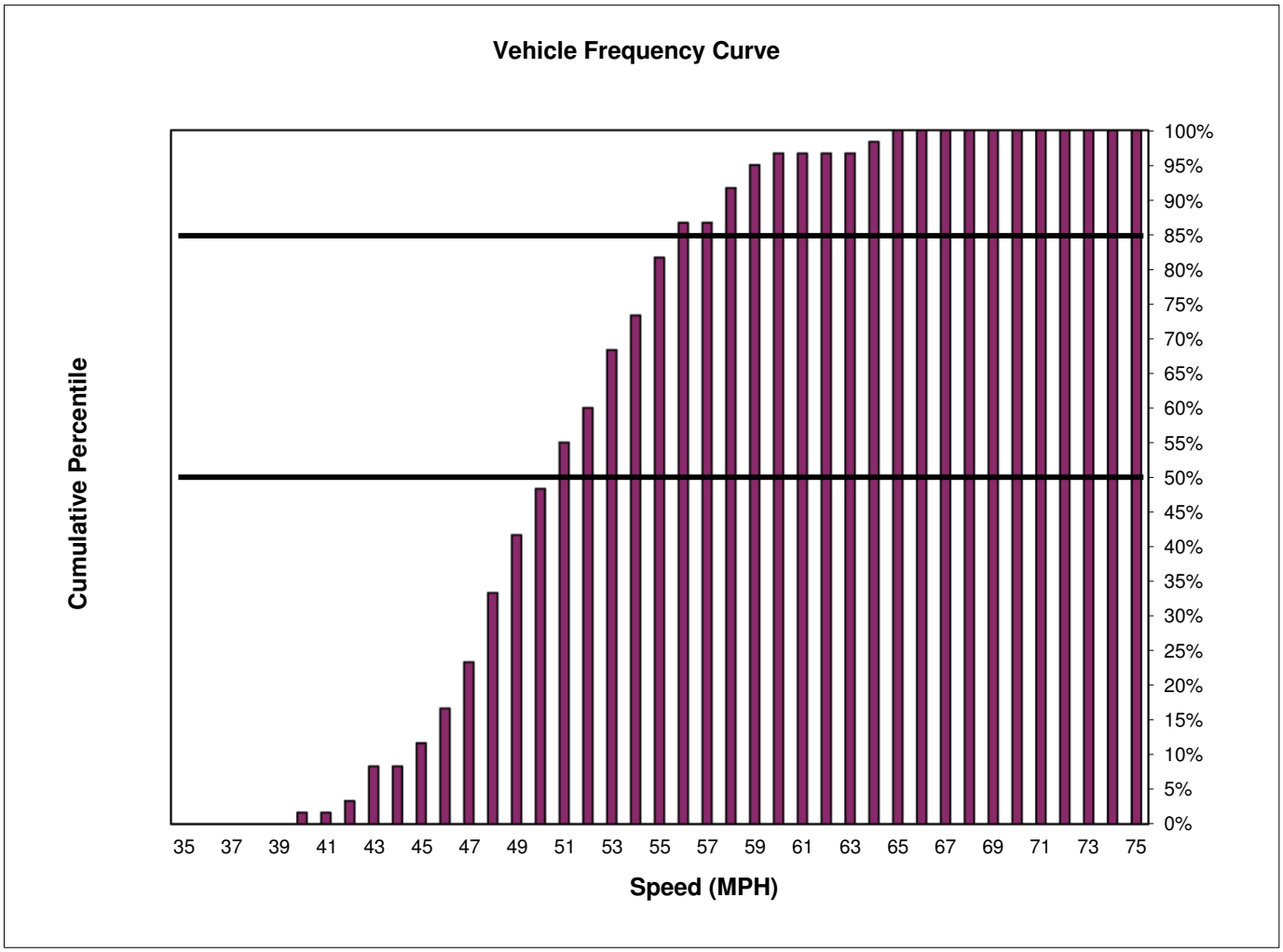

S_{50th} = 51 MPH | S_{85th} = 56 MPH | S_{Ave} = 51 MPH

S_{Min} = 40 MPH | S_{Max} = 65 MPH | S_{Pace} = 46 to 55 MPH

% Obey Posted Speed = 82% | % In Pace = 70%

Actual Collision Rate = XX per MVM | Average Collision Rate = XX per MVM

Note: Collision Rate = Number of Collisions per Million Vehicle Miles Traveled

CALIFORNIA DEPARTMENT OF TRANSPORTATION

LIDAR MOTOR VEHICLE SPEED SURVEY
FIELD TALLY SHEET

County: Monterey Route: 1 Postmile: 62.97

From: 05-MON-01-PM 62.97 Direction: Southbound

To: 05-MON-01-PM 62.97 Observer: Juan Lezo

ADT: XXXX Weather: Overcast

Posted Speed: 55 MPH Date: 11/19/2019 Day: Tuesday Time: 12:20 PM

Speed (MPH)	NUMBER OF VEHICLES																												Total
75																													
74	X																												1
73																													
72																													
71																													
70	X																												1
69																													
68																													
67																													
66																													
65	X	X																											2
64																													
63																													
62	X																												1
61	X																												1
60	X																												1
59	X																												1
58	X	X	X																										3
57	X																												1
56																													
55	X	X	X	X	X	X	X																						7
54	X	X																											2
53	X	X	X	X	X	X																							6
52	X	X	X	X	X																								5
51	X	X																											2
50	X	X	X	X	X	X																							6
49	X	X	X	X	X																								5
48	X	X	X																										3
47	X	X	X	X	X																								5
46	X																												1
45	X	X																											2
44	X																												1
43																													
42	X	X																											2
41	X																												1
40																													
39																													
38																													
37																													
36																													
35																													
																												Total Number of Vehicles	60

Caltrans
CALIFORNIA DEPARTMENT OF TRANSPORTATION

LIDAR MOTOR VEHICLE SPEED SURVEY
FIELD TALLY SHEET

County: Monterey | Route: 1 | Postmile: 62.970

From: 05-MON-01-PM 62.97 | Direction: Southbound

To: 05-MON-01-PM 62.97 | Observer: Juan Lezo

ADT: XXXX | Weather: Overcast

Posted Speed: 55 MPH | Date: 11/19/2019 | Day: Tuesday | Time: 12:20 PM

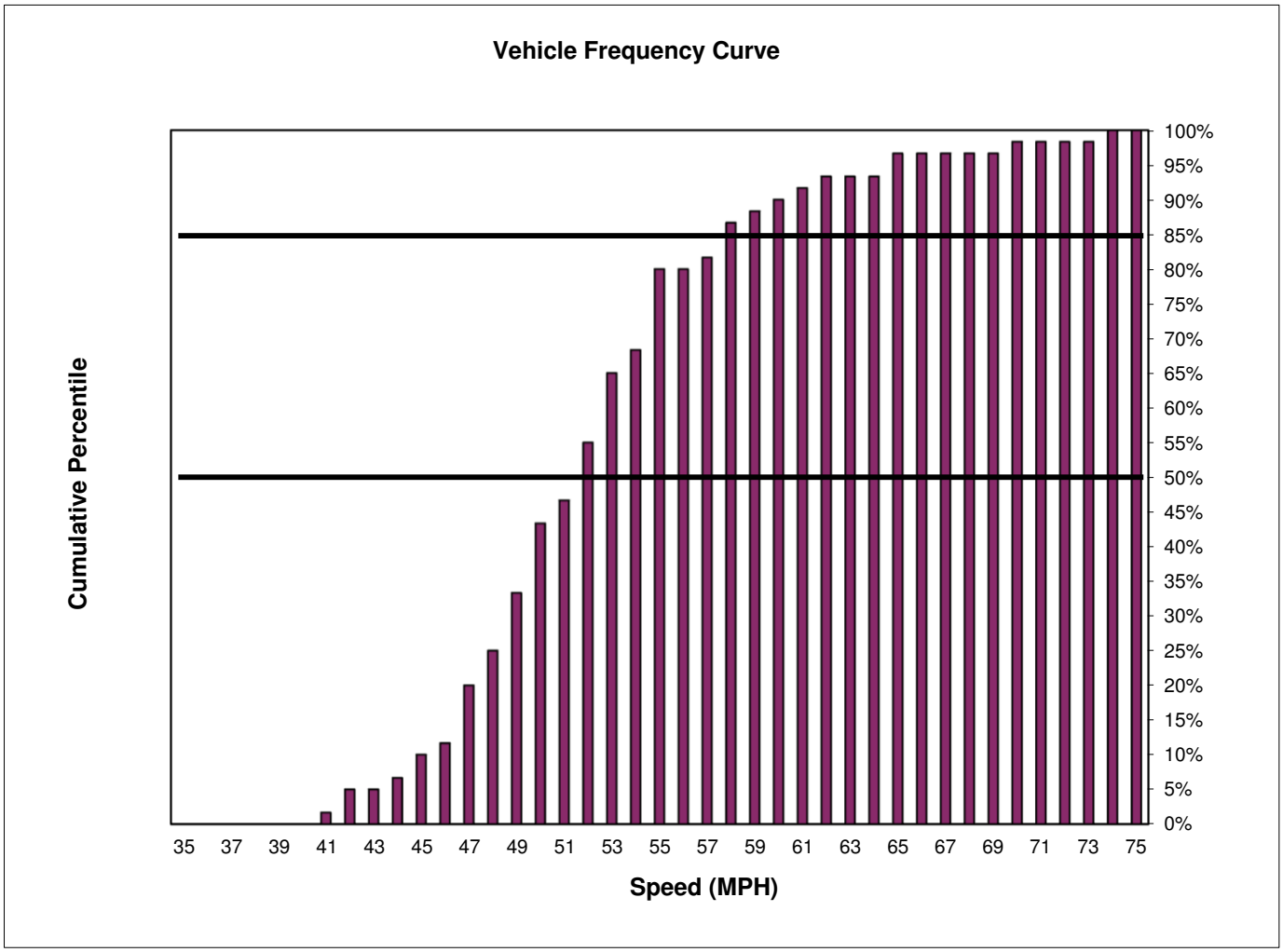

S_{50th} = 52 MPH | S_{85th} = 58 MPH | S_{Ave} = 52 MPH

S_{Min} = 41 MPH | S_{Max} = 74 MPH | S_{Pace} = 46 to 55 MPH

% Obey Posted Speed = 80% | % In Pace = 70%

Actual Collision Rate = XX per MVM | Average Collision Rate = XX per MVM

Note: Collision Rate = Number of Collisions per Million Vehicle Miles Traveled

CALIFORNIA DEPARTMENT OF TRANSPORTATION

LIDAR MOTOR VEHICLE SPEED SURVEY
FIELD TALLY SHEET

County: Monterey Route: 1 Postmile: 62.97

From: 05-MON-01-PM 62.97 Direction: Bi-Directional

To: 05-MON-01-PM 62.97 Observer: Juan Lezo

ADT: XXXX Weather: Overcast

Posted Speed: 55 MPH Date: 11/19/2019 Day: Tuesday Time: 12:20 PM

Speed (MPH)	NUMBER OF VEHICLES																												Total
75																													
74	X																												1
73																													
72																													
71																													
70	X																												1
69																													
68																													
67																													
66																													
65	X	X	X																										3
64	X																												1
63																													
62	X																												1
61	X																												1
60	X	X																											2
59	X	X	X																										3
58	X	X	X	X	X	X																							6
57	X																												1
56	X	X	X																										3
55	X	X	X	X	X	X	X	X	X	X	X	X																	12
54	X	X	X	X	X																								5
53	X	X	X	X	X	X	X	X	X	X	X																		11
52	X	X	X	X	X	X	X	X																					8
51	X	X	X	X	X	X																							6
50	X	X	X	X	X	X	X	X	X	X																			10
49	X	X	X	X	X	X	X	X	X	X																			10
48	X	X	X	X	X	X	X	X	X																				9
47	X	X	X	X	X	X	X	X	X																				9
46	X	X	X	X																									4
45	X	X	X	X																									4
44	X																												1
43	X	X	X																										3
42	X	X	X																										3
41	X																												1
40	X																												1
39																													
38																													
37																													
36																													
35																													
																												Total Number of Vehicles	120

Caltrans
CALIFORNIA DEPARTMENT OF TRANSPORTATION

LIDAR MOTOR VEHICLE SPEED SURVEY
FIELD TALLY SHEET

County: Monterey | Route: 1 | Postmile: 62.970

From: 05-MON-01-PM 62.97 | Direction: Bi-Directional

To: 05-MON-01-PM 62.97 | Observer: Juan Lezo

ADT: XXXX | Weather: Overcast

Posted Speed: 55 MPH | Date: 11/19/2019 | Day: Tuesday | Time: 12:20 PM

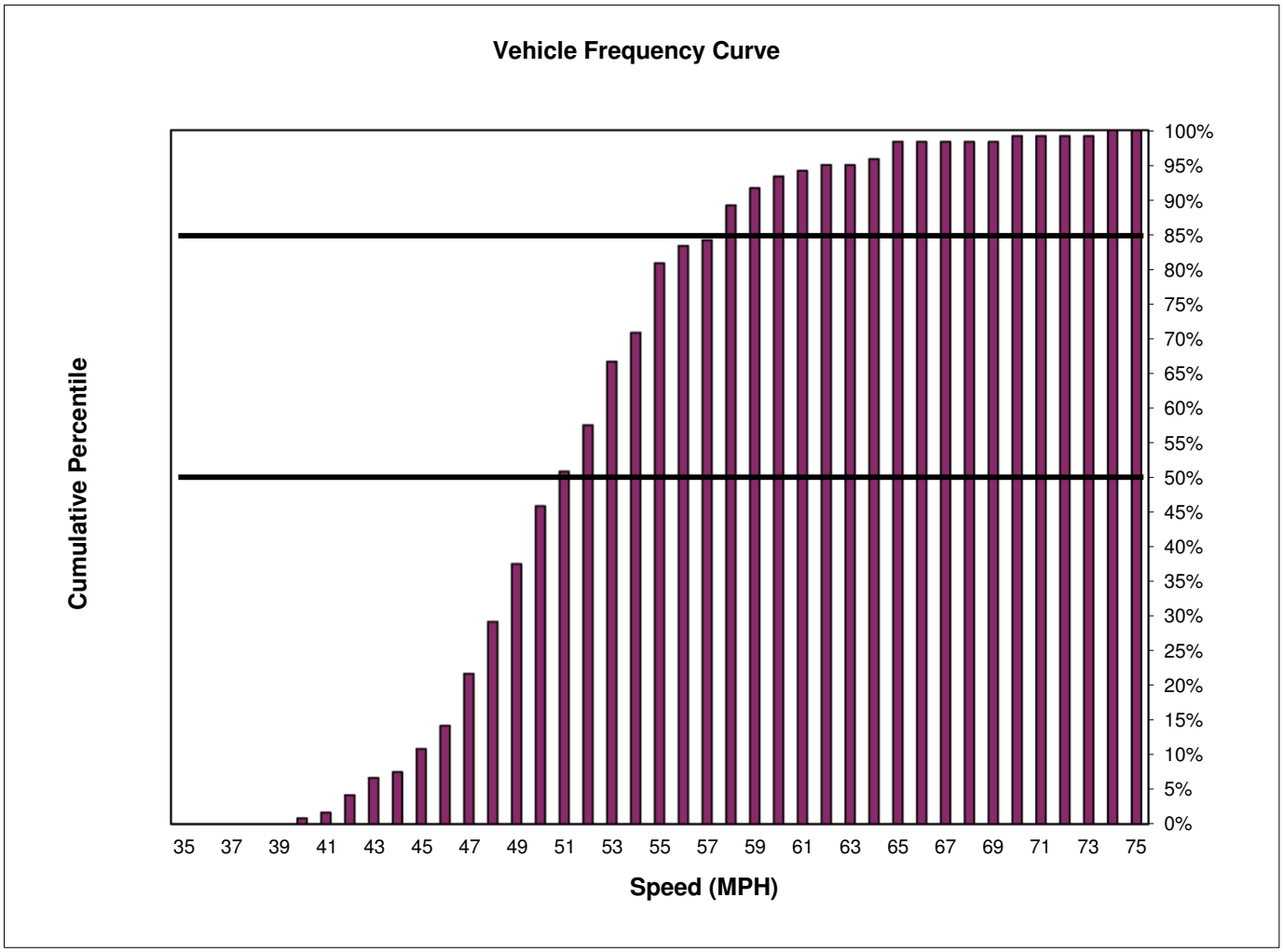

S_{50th} = 51 MPH | S_{85th} = 58 MPH | S_{Ave} = 52 MPH

S_{Min} = 40 MPH | S_{Max} = 74 MPH | S_{Pace} = 46 to 55 MPH

% Obey Posted Speed = 81% | % In Pace = 70%

Actual Collision Rate = XX per MVM | Average Collision Rate = XX per MVM

Note: Collision Rate = Number of Collisions per Million Vehicle Miles Traveled

Caltrans
CALIFORNIA DEPARTMENT OF TRANSPORTATION

Attachment 9
FAQS on Setting Speed Limits

FAQs on the California Manual for Setting Speed Limits

The following is a list of frequently asked questions (FAQs) on the California Manual on Setting Speed Limits. If after reviewing this document you have further questions, please email the CA MUTCD Editor at CAMUTCD@dot.ca.gov with the Subject heading "California Manual on Setting Speed Limits".

General Questions

1. Q: Who is responsible for setting speed limits?

   A: The California Vehicle Code (CVC) 22349, Maximum Speed Limit, prescribes the speed limits in California. When speeds are to be lowered based on an Engineering and Traffic Survey (E&TS) on the State Highways, the District Traffic Engineer is charged with determining speed limits. On local roads, the local agency has this function.

2. Q: What justifies lowering the speed by 5 mph from the 85th percentile speed?

   A: An engineer using engineering judgment makes this determination and should be based on roadway collision history, geometrics, user type, and other factors as deemed appropriate by the engineer.

3. Q: How often are speed zones updated?

   A: Speed Zone Surveys are valid for 5 years and may be extended to 7 years if specific criteria on radar operator certification, equipment calibration, and training have been met. A survey may be extended to 10 years if the engineer determines all above criteria have been met and no significant changes in roadway or traffic conditions have occurred.

4. Q: What happens when an agency sets a speed limit to an arbitrarily low speed in order to appease a local neighborhood?

   A: When speed limits are lowered without an E&TS, with some exceptions, speeding violations issued to drivers may be thrown out in court. Exceptions include speed limits that are near schools, senior centers, or in business districts.

5. Q: What traffic conditions are necessary in order to conduct an E&TS?

   A: Dry road conditions, off-peak hour traffic under free-flow conditions on an average weekday is necessary in order to capture data for a valid E&TS. If vehicles are in a platoon, the first vehicle's speed is measured.

Attachment 10
Visual Simulations

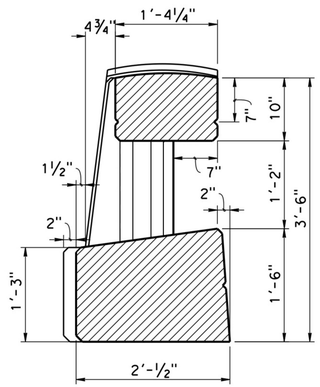

TYPE 86H SECTION

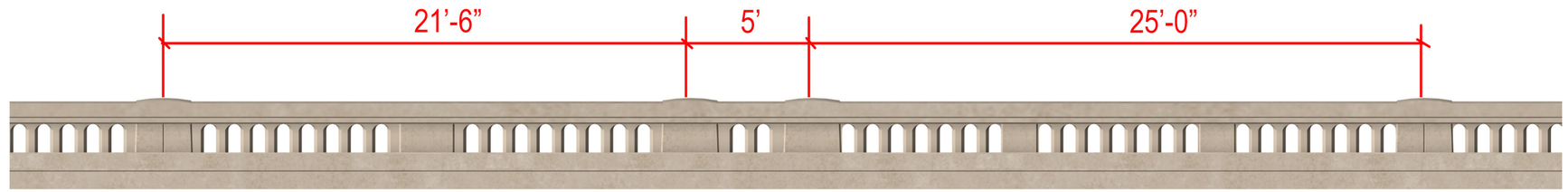

86H WITH TOP BEAM GROOVE LINE FRONT ELEVATION

EXISTING FRONT ELEVATION

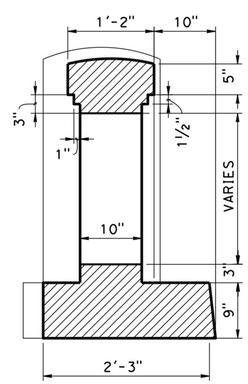

EXISTING SECTION

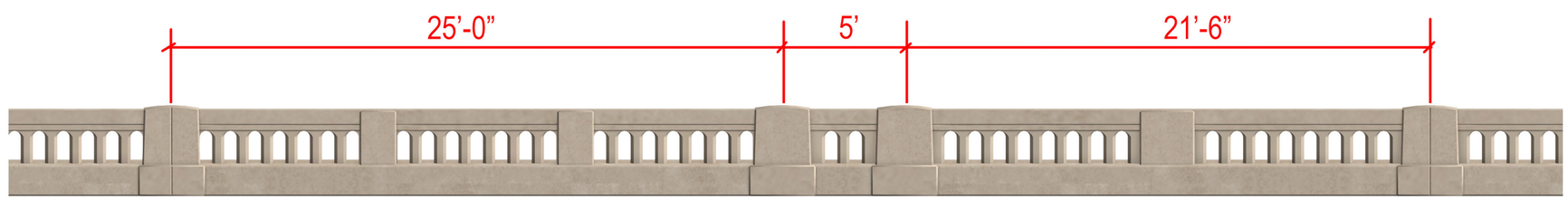

86H WITH TOP BEAM GROOVE LINE BACK ELEVATION

EXISTING BACK ELEVATION

GARRAPATA CREEK BRIDGE BARRIER STUDY

02/18/22

Prepared by: DES, Bridge Architecture and Aesthetics

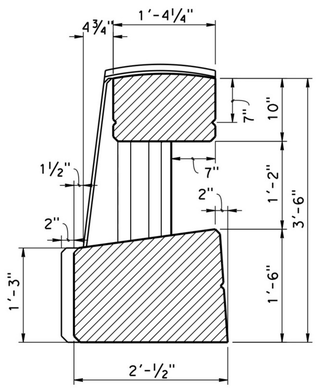

TYPE 86H SECTION

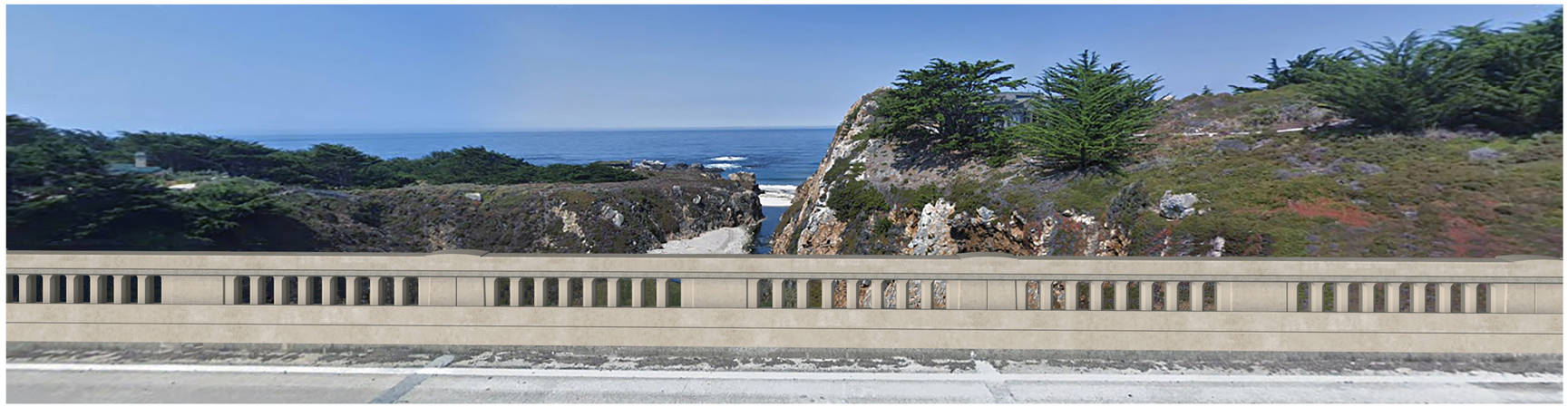

TYPE 86H ON DECK VIEW

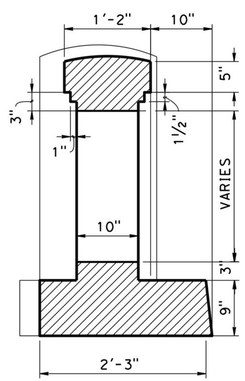

EXISTING SECTION

EXISTING ON DECK VIEW

GARRAPATA CREEK BRIDGE BARRIER STUDY

01/05/22

Prepared by: DES, Bridge Architecture and Aesthetics

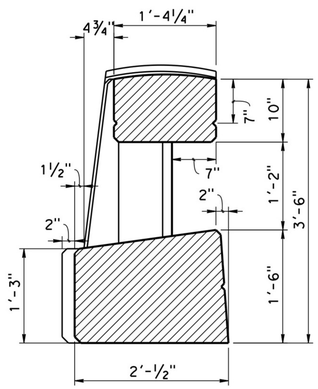

TYPE 86H SECTION

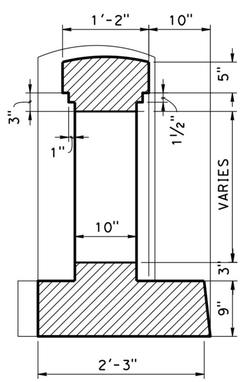

EXISTING SECTION

GARRAPATA CREEK BRIDGE BARRIER STUDY

02/22/22

Prepared by: DES, Bridge Architecture and Aesthetics

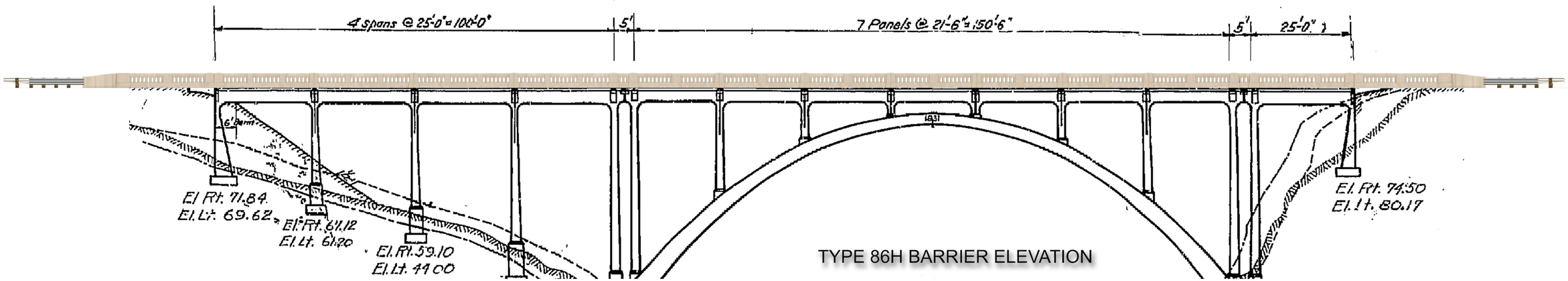

TYPE 86H BARRIER ELEVATION

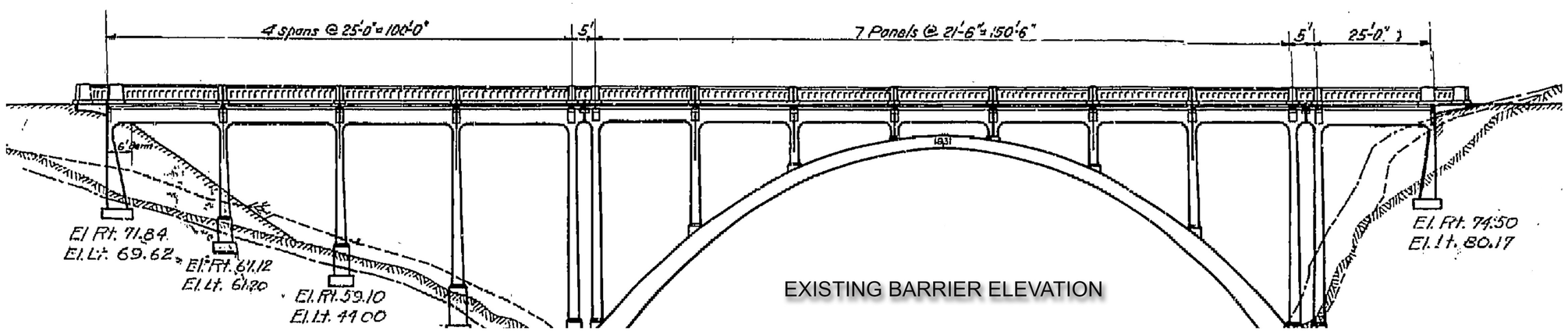

EXISTING BARRIER ELEVATION

GARRAPATA CREEK BRIDGE BARRIER STUDY

01/05/22

Prepared by: DES, Bridge Architecture and Aesthetics

Attachment 11
Visual Cross Section Comparison

Existing Concrete Baluster Bridge Rail at Garrapata Creek Bridge	Proposed Type 86H Concrete Barrier
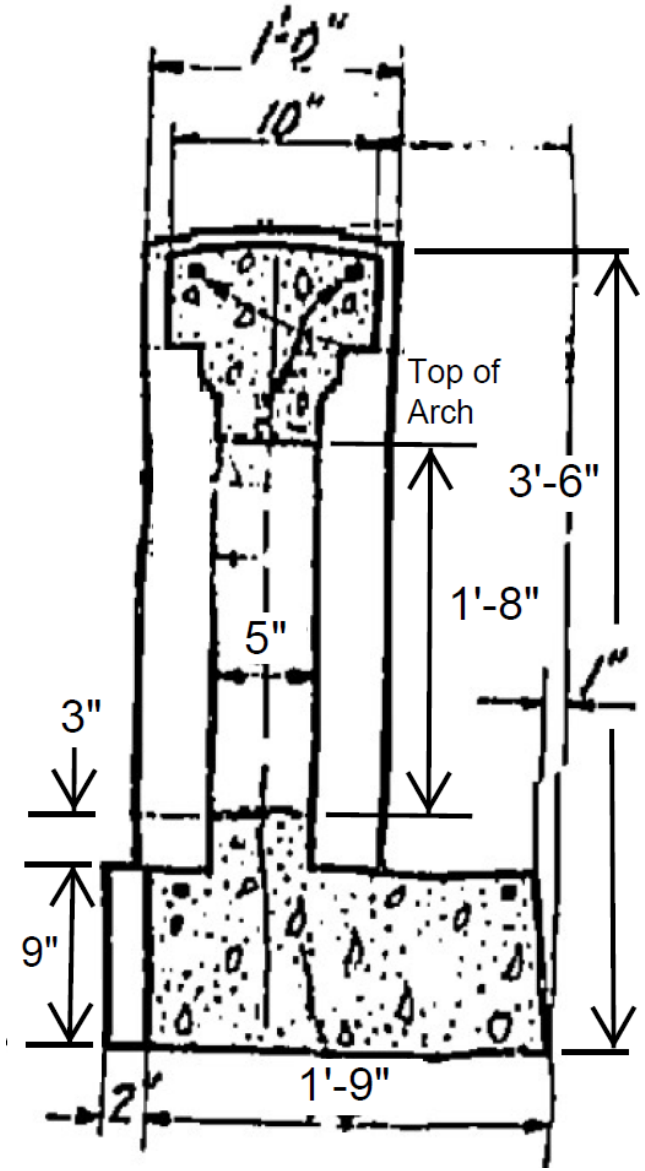	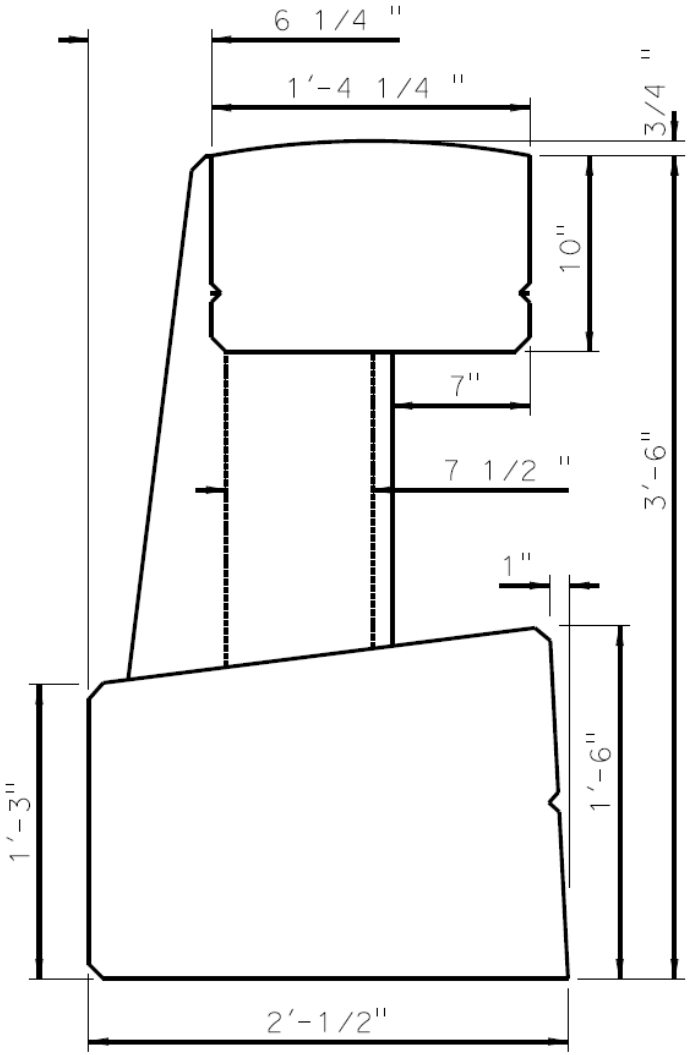

Attachment 12
Caltrans' Public Outreach Documentation

DEPARTMENT OF TRANSPORTATION
CALTRANS DISTRICT 5
50 HIGUERA STREET
SAN LUIS OBISPO, CA 93401-5415
PHONE (805) 549-3101
FAX (805) 549-3329
TTY 711
http://www.dot.ca.gov/dist05/

Making Conservation a California Way of Life.

August 31st, 2020

Mary Trotter
Big Sur Historical Society
PO Box 176
Big Sur, CA 93920

General Analysis (Tier I) for the
Big Sur Bridge Rail Replacement Project(s)
Monterey County, California
MON-001-PM-28.1-67.9
&
Specific Analysis (Tier II) for the
Garrapata Creek Bridge Rail Replacement Project
Monterey County, California
EA: 05-1H800 / EFIS: 05-1600-0163
MON-001-PM-63.0

Dear Ms. Trotter:

The California Department of Transportation (Caltrans) is currently proposing the pilot project in a series of six (6) separate upcoming undertakings. The Garrapata Creek Bridge (Bridge Number 44-0018) Rail Replacement will be the first project intended to gradually replace all of the concrete baluster bridge rails for six (6) historic open spandrel reinforced concrete arch bridges along State Route 1 (SR-1) in Monterey County. The six historic bridges are located between post miles (PM) 28.1 and 67.9 and include the following structures:

- Garrapata Creek Bridge at PM 63.0 (Bridge Number 44-0018); (the pilot project & currently proposed)
- Big Creek Bridge at PM 28.1 (Bridge Number 44-0056);
- Bixby Creek Bridge at PM 59.4 (Bridge Number 44-0019);
- Rocky Creek Bridge at PM 60.0 (Bridge Number 44-0036);
- Granite Canyon Bridge at PM 64.3 (Bridge Number 44-0012);
- Malpaso Creek Bridge at PM 67.9 (Bridge Number 44-0017);

The original concrete railing on the six historic bridges does not meet the current modern safety standards set by the Manual for Assessing Safety Hardware (MASH) and will be replaced with a new railing designed to meet these standards. The Manual for Assessing Safety Hardware (MASH) is a nationwide standard that was implemented by the Federal Highway Administration (FHWA) and the American Association of State Highway Transportation Officials (AASHTO) in 2009 (updated in 2016). MASH sets the standards for highway safety equipment, including bridge rails, guardrails, and other safety features. Newly adopted MASH standards have mandated that all new installations of roadside safety devices on high-speed roadways, including bridge railing, must meet a new higher standard for crash testing for all projects conducted after December 31st, 2019, without exception.

The purpose of the project(s) will be to replace the existing nonstandard concrete baluster bridge rails and approach rails with new railing that meets current traffic safety standards while also retaining a design that is as close as possible to the original railing design. Caltrans is committed to choosing a new MASH compliant railing style that is context sensitive and will be compatible with the character of the Big Sur region, the historic bridges themselves, and within the Carmel-San Simeon Highway Historic District (CSSHHD). Caltrans structures design engineers are currently developing a new bridge rail that is designed specifically to replicate the design of the historic rails as closely as possible while also meeting the new MASH crashworthiness standards. The new Caltrans rail design

(Type 86H) is currently undergoing crash testing. A second new rail design developed by the Texas Department of Transportation to replicate historic bridge rail designs (Type C412) is also under consideration. (See Attachment 2 for renderings of the new bridge rail designs).

At this early stage Caltrans is performing a tiered evaluation of these projects, with the intention of streamlining the environmental review and evaluating any potential cumulative impacts, growth-inducing impacts, and irreversible significant effects on the environment of subsequent projects. At this time Caltrans is providing a general notification of these six (6) upcoming projects and will provide additional information about each specific project as details are developed for each individual undertaking in Tier II. Caltrans is also providing specific (Tier II) notification for the Garrapata Creek Bridge (No. 44-0018) which is currently proposed to receive replacement bridge rails. Detailed studies for the Garrapata Creek Bridge Rail Replacement Project (EA: 05-1H800) are currently underway. At this time, additional railing replacement projects have not yet been proposed for the other five bridges and may be occurring several years in the future.

Caltrans is interested in learning whether your organization has special interest in, or special knowledge of these or any other resource within the project study area that should be considered during our architectural studies. If you have questions or concerns, please do not hesitate to contact me at Daniel.leckie@dot.ca.gov or at (805) 542-4754. In keeping with project scheduling deadlines, Caltrans is kindly requesting your response regarding the Garrapata Creek Bridge rail replacement project (05-1H800) specifically by October 5th, 2020. This letter also serves as a notification for the five other upcoming bridge rail replacement projects, however Caltrans will provide additional notification during bridge specific (tier II) studies for all other individual bridge rail replacement projects as those undertakings are developed in the future.

Thank you for your participation.

Sincerely,

Daniel T. Leckie
Associate Environmental Planner (Architectural History)

Enc: Map of project study area
Photos/drawings of original and new bridge rail designs

cc:

Carmel Heritage Society
PO BOX 701
Carmel, CA 93921

Kitty Henderson
Executive Director
Historic Bridge Foundation
P.O. Box 66245
Austin, Texas 78766

James Perry
Curator & Archivist
Monterey County Historical Society
P.O. Box 3576
Salinas, CA 93912

Craig Spencer
Monterey County
Historic Resources Review Board
1441 Schilling Place
Salinas, CA 93901

Dear Mr. Leckie, September 27, 2020

Thank you for the opportunity to comment on the Bridge Rail Replacement for Garrapata Creek Bridge, and once again thank you for the reminder of the deadline. I think this is particularly important as I imagine decisions made on this bridge will carry over to the other four bridges. I acknowledge that the rails have begun to deteriorate and I have been unhappy with the repairs made to date. There has been no effort to match the color of the concrete with the original and these repairs stand out like a sore thumb.

These bridges have been declared eligible for historic designation not principally for their age but also for their grace and beauty and the continuity of design along the highway corridor. The design elements carry over to the other features of the highway such as culvert headings and the parapet walls. The remaining fountains also fit into this same style.

I regret that the safety standards keep changing as I know that each new design goes through extensive and expensive testing, making it difficult to go with anything other than a standard design developed to be generic and fit anywhere. Highway 1 through the Big Sur corridor deserves better, both for its eligibility for historic designation and the Byway status it was awarded. More than fifty years ago Lady Bird Johnson stood beside Bixby Bridge to dedicate Highway 1 the first national scenic highway. The drive from Carmel to San Luis Obispo is a destination in itself, and although I make this drive many times a month to the north and several times a year to the south it never tires.

The design for the new rails feels to me like placing Romanesque elements on a Gothic cathedral. The archways are heavy, bulky and overwhelmingly solid and actually not archways but rectangular spaces. They emphasize the structure rather than the openings between. There is nothing light and graceful about them. The proposed openings are 5 ¾ inches, just over half the original openings of 10 inches. According to the drawings the solid posts are 7 ¼ inches opposed to the 6 inch originals, but they look much larger in the photo simulations. And although it notes above one of the drawings that the rectangular openings can be made arches, as they have drawn them the openings are made not more graceful but more solid leaving even less of an opening. I would still prefer the arch. The drawings make it appear that the openings are not plain but have some kind of framing. This element was not clear to me

I am unaware that the historic railings have posed any actual safety hazard to the traveling public. I don't believe that any automobile has actually crashed through the rails although they may have been sideswiped. And the bridges are already out of federal compliance due to their width.

The Coast Highway Management Plan was a years long endeavor intended to bring together the many state and federal agencies having some sort of regulatory oversight of Highway 1. Cal

Trans was the first of these agencies to come to the table and involve the community in the decision-making process. It should be possible for state and federal to reach a compromise about changes to historic structures. Has a Section 106 review been done?

My best hope would be that the railings could be replaced with the exact same design, perhaps beefed up on the interior with more or larger diameter rebar. Another important design element is the color. It is believed that the unique color of the bridge structures comes from the fact that local sand was used to mix the concrete for each bridge. I don't know how accurate this story is, but nonetheless the color is a very pleasing element of the design. I am not suggesting that you use local sand, but I do know that concrete can be colored and it should be possible to match the original.

I believe the historic eligibility designation should have some real meaning and strength to oppose these changes. I can foresee that as future repairs or replacements are needed, and new regulations are adopted, little by little we end up protecting something that has no relationship to the original.

Sincerely,

Mary Trotter
Big Sur Historical Society
PO Box 132, Big Sur, CA 93920
quailmeadows@gmail.com

Leckie, Daniel@DOT

From: Leckie, Daniel@DOT
Sent: Monday, September 21, 2020 10:40 AM
To: Mary Trotter
Cc: Jaci Pappas; info@bigsurhistory.org
Subject: FW: Big Sur Bridge Rail Replacement (Garrapata Creek Bridge Pilot Project - EA: 05-1H800)
Attachments: 1H800_toBigSurHS_Signed.pdf; Attachment 1 - Mapping.pdf; Attachment 3 - Images.pdf

Ms. Trotter,

I just wanted to briefly reach out with a reminder about the Garrapata Creek Bridge (Bridge Number 44-0018) Rail Replacement project (EA: 05-1H800) for which we reached out to you and several other historical organizations via Email and Postal Mail on August 31st, 2020. Caltrans has requested comments from your organization on this upcoming project (which is described in the email below as well as the attached documentation) and is hoping to gather all comments from potentially interested parties and organizations with special knowledge of the area, including the Big Sur Historical Society, by Monday October 5th, 2020.

Thank you for your time and we look forward to hearing your valued feedback.

Sincerely,

Daniel T. Leckie
Associate Environmental Planner &
PQS Principal Architectural Historian
California Department of Transportation | District 5
50 Higuera Street | San Luis Obispo| California |93405
Office Phone : (805) 542-4754

From: Leckie, Daniel@DOT
Sent: Monday, August 31, 2020 4:06 PM
To: Mary Trotter <quailmeadows@gmail.com>
Cc: Jaci Pappas <jaci@redshift.com>; info@bigsurhistory.org
Subject: Big Sur Bridge Rail Replacement (Garrapata Creek Bridge Pilot Project - EA: 05-1H800)

Dear Ms. Trotter,

The California Department of Transportation (Caltrans) is currently proposing the pilot project in a series of six (6) separate upcoming undertakings. The Garrapata Creek Bridge (Bridge Number 44-0018) Rail Replacement will be the first project intended to gradually replace all the concrete baluster bridge rails for six (6) historic open spandrel reinforced concrete arch bridges along State Route 1 (SR-1) in Monterey County. The purpose of the project(s) will be to replace the existing nonstandard concrete baluster bridge rails and approach rails with new railing that meets current traffic safety standards while also retaining a design that is as close as possible to the original railing design. Please see the letter and documents attached to this email for more info. These documents have also been forwarded to the following postal address:

Mary Trotter
Big Sur Historical Society
PO Box 176
Big Sur, CA 93920

At this early stage Caltrans is performing a tiered evaluation of these projects, with the intention of streamlining the environmental review and evaluating any potential cumulative impacts, growth-inducing impacts, and irreversible significant effects on the environment of subsequent projects. At this time Caltrans is providing a general notification of these six (6) upcoming projects and will provide additional information about each specific project as details are developed for each individual undertaking in Tier II. Caltrans is also providing specific (Tier II) notification for the Garrapata Creek Bridge (No. 44-0018) which is currently proposed to receive replacement bridge rails and detailed studies for the Garrapata Bridge Rail Replacement Project (EA: 1H800) are currently underway.

In keeping with project scheduling deadlines, Caltrans is kindly requesting your response regarding the Garrapata Creek Bridge rail replacement project (05-1H800) specifically by **October 5th, 2020.** Caltrans will provide additional notification during bridge specific (tier II) studies for all other individual bridge rail replacement projects as those undertakings are developed in the future.

Please feel free to reach by the email address or phone number in my signature line below with any questions or comments about this upcoming project. Thank you for your valued participation.

Sincerely,

Daniel T. Leckie
Associate Environmental Planner
Principal Architectural Historian
Caltrans District 5
50 Higuera Street
San Luis Obispo CA 93401
P: (805) 542-4754.
E: Daniel.Leckie@dot.ca.gov

Leckie, Daniel@DOT

From: Leckie, Daniel@DOT
Sent: Monday, September 28, 2020 12:26 PM
To: Mary Trotter
Cc: Spencer, Craig x5233; info@bigsurhistory.org; Jaci Pappas; James Perry
Subject: RE: Big Sur Bridge Rail Replacement (Garrapata Creek Bridge Pilot Project - EA: 05-1H800)
Attachments: comment bridge railings.docx; c412 sim.jpg; c412 with arch front.jpg; c412 with arch sim.jpg; c412 front.jpg; Type 86 front.jpg; Type 86 sim.jpg

Ms. Trotter,

Thank you for your thoughtful response to our request for comment on the Garrapata Creek Bridge Rail Replacement Project (05-1h800) as well as the other bridge rail replacement projects along the SR-1 in Monterey County to come at a later date. The participation of local organizations such as your own is critical to both choosing our final alternative for this project as well as informing the a design that will meet the projects purpose and need of upgrading these railings to modern standards while choosing a design that is amenable to the local community and takes in the context sensitivity of this historic location into account. I wanted to address a few of your concerns directly as well as attach some newer renderings that our structures design team have put together based on some of the comments from my team (The District 5 Cultural Resources Branch) which actually essentially mirrored yours. Since or initial message to you in late August the renderings have been upgraded to remove the bicycle railings, get a clearer view of the arched opening design on the c412 rails, and they no attempt to more closely match the distinctive sandy-beige color of the original bridges.

Moving forward I will attempt to address a few comments from the attached document you provide below. However please feel free to reach out via email or call me directly at **(805) 542-4754** if you'd like to speak on any of this further.

1) ***Comment:*** *"I regret that the safety standards keep changing as I know that each new design goes through extensive and expensive testing, making it difficult to go with anything other than a standard design developed to be generic and fit anywhere."*
    - **Response:** The initial comment is true, as the standards change it certainly does make Caltrans options more limited for replacement options. That said, one area I think we could improve in is telling the story of the amount of work we have done to develop a context sensitive design that also meets current MASH crashworthiness standards. Due to the sensitive and historic nature of the highway, there has been extensive work in both approving the c412 type railing developed by the Texas DOT as well as Type 86 rail which is currently being designed by Caltrans specifically for use on this important project. Additionally, Caltrans looked into other options including lowering the speed limits to approve a railing more similar to that which currently exists. However, after speed surveys were done it was determined because of the high rate of speed at this location lowering speed limits would be infeasible. Though the new standards limit our ability to develop an in kind example as it requires specific dimesons and limits the size of openings, I would like to impart that Caltrans has gone through an extensive process to choose an option that is compatible with historic highway 1 and hopefully is not just a standard / generic design.
2) ***Comment:*** *"It should be possible for state and federal to reach a compromise about changes to historic structures."*
    - **Response:** As a private citizen with a demonstrated interest in Historic Preservation my personal opinion would tend to agree with you: The State and the Federal government *should*

be able to reach individual compromises about changes to historic structures. Unfortunately that is not the situation we find ourselves in as an agency, and this is not just a situation Caltrans finds itself in but it is true for the other 49 State DOTs throughout the country as well. According to feedback from the Federal Highway Administration (FHWA) with buyoff from the Advisory Council for Historic Preservation (ACHP) all federally funded projects must meet these new standards and there are no exceptions to this rule. Sadly, in some cases there is no way to avoid an adverse effect to a historic structure, and all that can be done is to make efforts to minimize such an adverse effect. It is now our job to develop a design that as closely mimics the original while meeting these rigorous crash testing standards set by the federal government.

3) ***Comment:*** *"Has a Section 106 review been done?"*
   - **Response:** We are currently in Section 106 review for this project. The SHPO has been notified of the upcoming projects to replace the railings on the six bridges (this happened concurrently with our initial letter to your organization) and the next steps will be to initiate project specific consultation as each project is proposed. We are currently drafting a Finding of Effect Document (FOE) for the Garrapata Creek Project specifically as the pilot project, but that is the only project actively proposed at this time. We are looking to submit the consultation, including a finding of Adverse Effect to the SHPO sometime later this year. Your comments on the project (in addition to the comments of the 4 other identified consulting parties (The Carmel Heritage Soceity, The Monterey County Historical Soceity, The Monterey County Historic Resources Review Board, and the Historic Bridge Foundation) will be included with our submission to the SHPO and taken into account through that process.

4) ***Comment****: My best hope would be that the railings could be replaced with the exact same design, perhaps beefed up on the interior with more or larger diameter rebar.*
   - **Response:** unfortunately as outlined in the response to #2 above this is not a feasible option due to the universality of these newly implemented FHWA standards which require specific dimensions, and limit the dimensions of openings. Additionally, because the width of the historic bridge is already quite narrow by modern standards, there is simply no room on the roadway to add elements to the interior of the bridges.

5) ***Comment:*** *"It is believed that the unique color of the bridge structures comes from the fact that local sand was used to mix the concrete for each bridge. I don't know how accurate this story is, but nonetheless the color is a very pleasing element of the design. I am not suggesting that you use local sand, but I do know that concrete can be colored and it should be possible to match the original."*
   - **Response:** I noticed this myself on the prior renderings, that the color was a just a dark gray and did not make an attempt to replicate the distinct color of the existing Garrapata Creek Bridge. Certainly an oversight in the early drafts for these images, but our design team has updated those renderings for us based on a suggested color palate I gave them and they I have attached these new renderings to this email. That said, these digital renderings still don't match the color perfectly and are by no means the final designed feature. This will continue to be worked out as time goes on and we are still quite early on in this process. These images are really just intended to evoke an idea of how the replacement railings might appear, but are limited in terms of detail / texturing etc. Though those preliminary images did not address this, I am confident given the amount of time and attention our design teams have put into this project to try and develop a unique new railing for this unique setting, that they will similarly make sure the color matches the existing structure as closely as possible.

That is all I have for now but as I said please feel free to reply to this email or call me with any additional questions or concerns about the project. I thank you for your time and attention to this matter, and the great work you and your organization do to preserve the heritage of the beautiful Big Sur Coast.

Best regards,

Daniel T. Leckie
Associate Environmental Planner &
PQS Principal Architectural Historian
California Department of Transportation | District 5
50 Higuera Street | San Luis Obispo| California |93405
Office Phone : (805) 542-4754

From: Mary Trotter <quailmeadows@gmail.com>
Sent: Monday, September 28, 2020 10:43 AM
To: Leckie, Daniel@DOT <Daniel.Leckie@dot.ca.gov>
Cc: Spencer, Craig x5233 <SpencerC@co.monterey.ca.us>; info@bigsurhistory.org; Jaci Pappas <jacipappas@gmail.com>; James Perry <mchs@redshift.com>
Subject: Big Sur Bridge Rail Replacement (Garrapata Creek Bridge Pilot Project - EA: 05-1H800)

EXTERNAL EMAIL. Links/attachments may not be safe.

Mary Trotter
831 667 2521
quailmeadows@gmail.com

DEPARTMENT OF TRANSPORTATION
CALTRANS DISTRICT 5
50 HIGUERA STREET
SAN LUIS OBISPO, CA 93401-5415
PHONE (805) 549-3101
FAX (805) 549-3329
TTY 711
http://www.dot.ca.gov/dist05/

Making Conservation a California Way of Life.

December 10th, 2020

Mary Trotter
Big Sur Historical Society
PO Box 176
Big Sur, CA 93920

Notice of Adverse Effect and Mitigation Proposal
Garrapata Creek Bridge Rail Replacement Project
Monterey County, California
EA: 05-1H800 / EFIS: 05-1600-0163
MON-001-PM-63.0

Dear Ms. Trotter:

As per the previous letter from our office dated August 31st 2020, The California Department of Transportation (Caltrans) is currently proposing to replace the original railing on the Garrapata Creek Bridge (Bridge Number 44-0018) in Monterey County, on State Route 1 (SR-1) north of Big Sur. The Garrapata Creek Bridge Rail Replacement Project (EA: 05-1H800) will be the first project intended to gradually replace all of the concrete baluster bridge rails for six (6) historic open-spandrel reinforced-concrete arch bridges along SR-1 in Monterey County. As the dimensions of the original bridge rails are not compliant with modern standards in the Manuel for Assessing Safety Hardware (MASH) set by the American Association of State Highway and Transportation Officials (AASHTO), it has been determined the bridge railing cannot be replaced in kind, and will require a new railing with different dimensions. Specifically, the new railing will include a larger base and baluster and smaller arched openigs, in order to meet the current safety standards. Despite the required changes, Caltrans is committed to choosing a railing type that is as compatible with the historic bridge design and scenic corridor as possible.

The Garrapata Creek Bridge is a historic property that is eligible for the National Register of Historic Places (NRHP) and the California Register of Historical Resources (CRHR) under NRHP/CRHR significance criterion A/1 in the area of transportation and criterion C/3 as a distinctive example of an open spandrel reinforced concrete arch bridge in California. Furthermore, the bridge is also a contributing element to the Carmel San-Simeon Highway Historic District (CSSHHD), a historic property consisting of over 200 individual elements, such as rubble stone masonry headwalls, retaining walls, parapet walls, drinking fountains as well as seven (7) reinforced concrete arch bridges known collectively as the "Big Sur Arches". The reinforced concrete railings, with their arched window design and smooth texture finish, are a noted character defining feature of the historic Garrapata Creek Bridge. Because the original bridge rails cannot be repaired or replaced in kind, Caltrans has determined this project will have an Adverse Effect to the Garrapata Creek Bridge.

In order to consider, the effects of this undertaking on historic properties, the adverse effect to the Garrapata Creek Bridge will be resolved through implementation of mitigation measures. These mitigation measures are to be outlined in a Memorandum of Agreement (MOA) which will be executed with the State Historic Preservation Office (SHPO) sometime in early 2021. Caltrans is currently considering proposing the mitigation measures for the Garrapata Creek Bridge Rail Replacement Project to include:

(1) Recordation of the bridge's current condition via the Historic American Engineering Record (HAER) to include written and photographic documentation;

(2) Production of Individual DPR 523 inventory forms for all seven (7) concrete arch bridges within the Carmel Simeon Highway Historic District (CSSHHD). All seven (7) Big Sur Arches were determined to be eligible

for the NRHP/CRHR as part of the Caltrans Statewide Historic Bridge Inventory without a detailed Historic Resources Evaluation Report for the individual resources. The current best information on the bridges is recorded on the CSSHHD district wide DPR 523 Inventory Form, for which the bridges are contributing elements. In order to better understand the unique history of each of the seven (7) Big Sur Arches, Caltrans is proposing to do individual analysis of all seven (7) structures. This measure is specifically in response to a request by the Monterey County Historic Resources Review Board in their October 29th, 2020 letter for a "detailed historic analysis and report for each bridge prepared by a qualified historian". The bridges to be individually researched, analyzed, and reported on will specifically include:

- Big Creek Bridge (1938) - PM 28.1, Bridge Number 44-0056
- Bixby Creek Bridge (1932) - PM 59.4, Bridge Number 44-0019
- Rocky Creek Bridge (1932) - PM 60.0, Bridge Number 44-0036
- Garrapata Creek Bridge (1931) - PM 63.0, Bridge Number 44-0018
- Granite Canyon Bridge (1932) - PM 64.3, Bridge Number 44-0012
- Malpaso Creek Bridge (1935) - PM 67.9, Bridge Number 44-0017
- Wildcat Creek Bridge (1933) – PM 69.0, Bridge Number 44-0016
  - *Note: The Wildcat Bridge, a closed spandrel concrete arch bridge, is not part of the Bridge Rail Replacement program at this time. Though it will not be impacted by an upcoming bridge rail replacement project, it is included because it is also a contributor to the CSSHHD and thematically similar to the other Big Sur Arches, with a slightly different design.*

(3) The production of an interpretive website to highlight the history of the Seven Big Sur Arches. The website will include historic and modern photographs, historic contexts developed in the individual historic analysis reports, and additional information on the engineering and transportation history of the bridges.

a. The website will be continually updated along with all other mitigations as future bridge rail replacement projects are proposed overtime.

b. Additionally, the website will also contain at least a page with outreach information in the form of lesson plans for elementary school aged students that focuses on historic and/or other Scientific, Technological, Engineering, or Mathematical (STEM) activities within a historic context.

At this stage, Caltrans is interested in receiving feedback from all consulting parties regarding the proposed mitigation measures. Caltrans kindly asks all comments on proposed mitigation are submitted by Wednesday December 30th, 2020 for consideration in the final draft Memorandum of Agreement (MOA) with the SHPO.

Thank you for your participation.

Sincerely,

Daniel T. Leckie
Associate Environmental Planner (Architectural History)

cc: Craig Spencer
Monterey County
Historic Resources Review Board
1441 Schilling Place
Salinas, CA 93901

DEPARTMENT OF TRANSPORTATION
CALTRANS DISTRICT 5
50 HIGUERA STREET
SAN LUIS OBISPO, CA 93401-5415
PHONE (805) 549-3101
FAX (805) 549-3329
TTY 711
http://www.dot.ca.gov/dist05/

Making Conservation a California Way of Life.

August 31st, 2020

Carmel Heritage Society
PO BOX 701
Carmel, CA 93921

General Analysis (Tier I) for the
Big Sur Bridge Rail Replacement Project(s)
Monterey County, California
MON-001-PM-28.1-67.9
&
Specific Analysis (Tier II) for the
Garrapata Creek Bridge Rail Replacement Project
Monterey County, California
EA: 05-1H800 / EFIS: 05-1600-0163
MON-001-PM-63.0

Dear Carmel Heritage Society:

The California Department of Transportation (Caltrans) is currently proposing the pilot project in a series of six (6) separate upcoming undertakings. The Garrapata Creek Bridge (Bridge Number 44-0018) Rail Replacement will be the first project intended to gradually replace all of the concrete baluster bridge rails for six (6) historic open spandrel reinforced concrete arch bridges along State Route 1 (SR-1) in Monterey County. The six historic bridges are located between post miles (PM) 28.1 and 67.9 and include the following structures:

- Garrapata Creek Bridge at PM 63.0 (Bridge Number 44-0018); (the pilot project & currently proposed)
- Big Creek Bridge at PM 28.1 (Bridge Number 44-0056);
- Bixby Creek Bridge at PM 59.4 (Bridge Number 44-0019);
- Rocky Creek Bridge at PM 60.0 (Bridge Number 44-0036);
- Granite Canyon Bridge at PM 64.3 (Bridge Number 44-0012);
- Malpaso Creek Bridge at PM 67.9 (Bridge Number 44-0017);

The original concrete railing on the six historic bridges does not meet the current modern safety standards set by the Manual for Assessing Safety Hardware (MASH) and will be replaced with a new railing designed to meet these standards. The Manual for Assessing Safety Hardware (MASH) is a nationwide standard that was implemented by the Federal Highway Administration (FHWA) and the American Association of State Highway Transportation Officials (AASHTO) in 2009 (updated in 2016). MASH sets the standards for highway safety equipment, including bridge rails, guardrails, and other safety features. Newly adopted MASH standards have mandated that all new installations of roadside safety devices on high-speed roadways, including bridge railing, must meet a new higher standard for crash testing for all projects conducted after December 31st, 2019, without exception.

The purpose of the project(s) will be to replace the existing nonstandard concrete baluster bridge rails and approach rails with new railing that meets current traffic safety standards while also retaining a design that is as close as possible to the original railing design. Caltrans is committed to choosing a new MASH compliant railing style that is context sensitive and will be compatible with the character of the Big Sur region, the historic bridges themselves, and within the Carmel-San Simeon Highway Historic District (CSSHHD). Caltrans structures design engineers are currently developing a new bridge rail that is designed specifically to replicate the design of the historic rails as closely as possible while also meeting the new MASH crashworthiness standards. The new Caltrans rail design

(Type 86H) is currently undergoing crash testing. A second new rail design developed by the Texas Department of Transportation to replicate historic bridge rail designs (Type C412) is also under consideration. (See Attachment 2 for renderings of the new bridge rail designs).

At this early stage Caltrans is performing a tiered evaluation of these projects, with the intention of streamlining the environmental review and evaluating any potential cumulative impacts, growth-inducing impacts, and irreversible significant effects on the environment of subsequent projects. At this time Caltrans is providing a general notification of these six (6) upcoming projects and will provide additional information about each specific project as details are developed for each individual undertaking in Tier II. Caltrans is also providing specific (Tier II) notification for the Garrapata Creek Bridge (No. 44-0018) which is currently proposed to receive replacement bridge rails. Detailed studies for the Garrapata Creek Bridge Rail Replacement Project (EA: 05-1H800) are currently underway. At this time, additional railing replacement projects have not yet been proposed for the other five bridges and may be occurring several years in the future.

Caltrans is interested in learning whether your organization has special interest in, or special knowledge of these or any other resource within the project study area that should be considered during our architectural studies. If you have questions or concerns, please do not hesitate to contact me at Daniel.leckie@dot.ca.gov or at (805) 542-4754. In keeping with project scheduling deadlines, Caltrans is kindly requesting your response regarding the Garrapata Creek Bridge rail replacement project (05-1H800) specifically by October 5th, 2020. This letter also serves as a notification for the five other upcoming bridge rail replacement projects, however Caltrans will provide additional notification during bridge specific (tier II) studies for all other individual bridge rail replacement projects as those undertakings are developed in the future.

Thank you for your participation.

Sincerely,

Daniel T. Leckie
Associate Environmental Planner (Architectural History)

Enc: Map of project study area
Photos/drawings of original and new bridge rail designs

cc:

Mary Trotter
Big Sur Historical Society
PO Box 176
Big Sur, CA 93920

Kitty Henderson
Executive Director
Historic Bridge Foundation
P.O. Box 66245
Austin, Texas 78766

James Perry
Curator & Archivist
Monterey County Historical Society
P.O. Box 3576
Salinas, CA 93912

Craig Spencer
Monterey County
Historic Resources Review Board
1441 Schilling Place
Salinas, CA 93901

***NOTE: PAGE LEFT INTENTIONALLY BLANK**

NO COMMENT WAS RECEIVED BY
THE CARMEL HERITAGE SOCIETY

DEPARTMENT OF TRANSPORTATION
CALTRANS DISTRICT 5
50 HIGUERA STREET
SAN LUIS OBISPO, CA 93401-5415
PHONE (805) 549-3101
FAX (805) 549-3329
TTY 711
http://www.dot.ca.gov/dist05/

Making Conservation a California Way of Life.

August 31st, 2020

Kitty Henderson
Executive Director
Historic Bridge Foundation
P.O. Box 66245
Austin, Texas 78766

General Analysis (Tier I) for the
Big Sur Bridge Rail Replacement Project(s)
Monterey County, California
MON-001-PM-28.1-67.9
&
Specific Analysis (Tier II) for the
Garrapata Creek Bridge Rail Replacement Project
Monterey County, California
EA: 05-1H800 / EFIS: 05-1600-0163
MON-001-PM-63.0

Dear Ms. Henderson:

The California Department of Transportation (Caltrans) is currently proposing the pilot project in a series of six (6) separate upcoming undertakings. The Garrapata Creek Bridge (Bridge Number 44-0018) Rail Replacement will be the first project intended to gradually replace all of the concrete baluster bridge rails for six (6) historic open spandrel reinforced concrete arch bridges along State Route 1 (SR-1) in Monterey County. The six historic bridges are located between post miles (PM) 28.1 and 67.9 and include the following structures:

- Garrapata Creek Bridge at PM 63.0 (Bridge Number 44-0018); (the pilot project & currently proposed)
- Big Creek Bridge at PM 28.1 (Bridge Number 44-0056);
- Bixby Creek Bridge at PM 59.4 (Bridge Number 44-0019);
- Rocky Creek Bridge at PM 60.0 (Bridge Number 44-0036);
- Granite Canyon Bridge at PM 64.3 (Bridge Number 44-0012);
- Malpaso Creek Bridge at PM 67.9 (Bridge Number 44-0017);

The original concrete railing on the six historic bridges does not meet the current modern safety standards set by the Manual for Assessing Safety Hardware (MASH) and will be replaced with a new railing designed to meet these standards. The Manual for Assessing Safety Hardware (MASH) is a nationwide standard that was implemented by the Federal Highway Administration (FHWA) and the American Association of State Highway Transportation Officials (AASHTO) in 2009 (updated in 2016). MASH sets the standards for highway safety equipment, including bridge rails, guardrails, and other safety features. Newly adopted MASH standards have mandated that all new installations of roadside safety devices on high-speed roadways, including bridge railing, must meet a new higher standard for crash testing for all projects conducted after December 31st, 2019, without exception.

The purpose of the project(s) will be to replace the existing nonstandard concrete baluster bridge rails and approach rails with new railing that meets current traffic safety standards while also retaining a design that is as close as possible to the original railing design. Caltrans is committed to choosing a new MASH compliant railing style that is context sensitive and will be compatible with the character of the Big Sur region, the historic bridges themselves, and within the Carmel-San Simeon Highway Historic District (CSSHHD). Caltrans structures design engineers are currently developing a new bridge rail that is designed specifically to replicate the design of the historic rails as closely as possible while also meeting the new MASH crashworthiness standards. The new Caltrans rail design

(Type 86H) is currently undergoing crash testing. A second new rail design developed by the Texas Department of Transportation to replicate historic bridge rail designs (Type C412) is also under consideration. (See Attachment 2 for renderings of the new bridge rail designs).

At this early stage Caltrans is performing a tiered evaluation of these projects, with the intention of streamlining the environmental review and evaluating any potential cumulative impacts, growth-inducing impacts, and irreversible significant effects on the environment of subsequent projects. At this time Caltrans is providing a general notification of these six (6) upcoming projects and will provide additional information about each specific project as details are developed for each individual undertaking in Tier II. Caltrans is also providing specific (Tier II) notification for the Garrapata Creek Bridge (No. 44-0018) which is currently proposed to receive replacement bridge rails. Detailed studies for the Garrapata Creek Bridge Rail Replacement Project (EA: 05-1H800) are currently underway. At this time, additional railing replacement projects have not yet been proposed for the other five bridges and may be occurring several years in the future.

Caltrans is interested in learning whether your organization has special interest in, or special knowledge of these or any other resource within the project study area that should be considered during our architectural studies. If you have questions or concerns, please do not hesitate to contact me at Daniel.leckie@dot.ca.gov or at (805) 542-4754. In keeping with project scheduling deadlines, Caltrans is kindly requesting your response regarding the Garrapata Creek Bridge rail replacement project (05-1H800) specifically by October 5th, 2020. This letter also serves as a notification for the five other upcoming bridge rail replacement projects, however Caltrans will provide additional notification during bridge specific (tier II) studies for all other individual bridge rail replacement projects as those undertakings are developed in the future.

Thank you for your participation.

Sincerely,

Daniel T. Leckie
Associate Environmental Planner (Architectural History)

Enc: Map of project study area
Photos/drawings of original and new bridge rail designs

cc:

Mary Trotter
Big Sur Historical Society
PO Box 176
Big Sur, CA 93920

Carmel Heritage Society
PO BOX 701
Carmel, CA 93921

James Perry
Curator & Archivist
Monterey County Historical Society
P.O. Box 3576
Salinas, CA 93912

Craig Spencer
Monterey County
Historic Resources Review Board
1441 Schilling Place
Salinas, CA 93901

Leckie, Daniel@DOT

From: Kitty Henderson <kitty@historicbridgefoundation.com>
Sent: Friday, October 9, 2020 9:03 AM
To: Leckie, Daniel@DOT
Subject: Re: Big Sur Bridge Rail Replacement (Garrapata Creek Bridge Pilot Project - EA: 05-1H800)

EXTERNAL EMAIL. Links/attachments may not be safe.

Daniel

[redacted] I am out of the office for the next few weeks. I will not be able to respond to the project(s) at this time.

Kitty Henderson
Executive Director
Historic Bridge Foundation
1500 Payne Ave
Austin, Texas 78757
512 407 8898

On Sep 21, 2020, at 5:04 PM, Leckie, Daniel@DOT <Daniel.Leckie@dot.ca.gov> wrote:

Kitty (1 of 3),

It was a pleasure to speak to you on the phone earlier. Thank you for your comments and pointed questions regarding the Garrapata Creek Bridge Rail Replacement project. I hope we can get to a place moving forward where you and the foundation feel you are contributing valuably and meaningfully as consulting parties in the Section 106 process as well as part of our overall compliance planning process for this project.

Attached is the first of three documents I will be sending your way this afternoon. These are the photos and renderings of the Garrapata Creek Bridge and Bridge railing which also includes some images of the other six Concrete Arch Bridges Caltrans has stewardship of along the Carmel San Simeon Highway Historic Distrct (CSSHHD) (aka Historic Highway 1). These are the images I initially intended to send your way with the prior two email messages, but it seems they dropped off. Hopefully these images will help better demonstrate the upcoming project. There are currently two railing types being considered, one Caltrans designed (Type 86) and the other from the Texas DOT (Type C412). Just a note a few of the renderings demonstrate a bicycle railing atop the concrete, but that feature is no longer under consideration. I also have a few updated renderings which better show the arched openings, I will send that next, and then I will send the DPR inventory form for the entire CSSHHD which includes information about the 6 bridges as they are contributing features to the historic district.

Please let me know if you don't receive any of these three items as we want you to have all the information you would need to make an informed comment on this project.

Thank you,

Daniel T. Leckie

Leckie, Daniel@DOT

From: Leckie, Daniel@DOT
Sent: Monday, September 21, 2020 3:10 PM
To: Kitty Henderson
Subject: Garrapata Renderings
Attachments: Type 86 sim.jpg; c412 sim.jpg; c412 with arch sim.jpg; Type 86 front.jpg; c412 front.jpg; c412 with arch front.jpg

Kitty (2 of 3),

Attached there should be 6 images of renderings that have been updated since the initial letters were sent out to the consulting parties. Note the bicycle railing has been eliminated, these better demonstrate the arched openings on the c412 railings, and the color has been corrected to better match the color of bridges and current railing.

I will now follow up with the inventory for the district.

Thanks,

Daniel T. Leckie
Associate Environmental Planner &
PQS Principal Architectural Historian
Caltrans District 5 | San Luis Obispo
Office Phone: (805) 542-4754

Leckie, Daniel@DOT

From: Leckie, Daniel@DOT
Sent: Monday, September 21, 2020 3:29 PM
To: Kitty Henderson
Subject: RE: Big Sur Bridge Rail Replacement (Garrapata Creek Bridge Pilot Project - EA: 05-1H800)
Attachments: Attachment 4 - CSSHHD DPR Forms.pdf

Kitty (3 of 3),

Attached to this email is the DPR 523 Form (or simply inventory form) for the Carmel San Simeon Highway Historic District. The 6 bridges in question are both individually eligible and contributing to the district, however the best information we have on them is within this document as they were determined individually eligible as part of a statewide bridge survey in the 1980s that did not look in depth at the history of any one bridge. The CSSHHD is a complex district with many resources, so I would like to direct your attention to page 54 of the overall PDF which contains a description of the bridges and a short paragraph regarding each individually. The pages that follow contain additional information and images about the bridges as well.

The historic context section can be found toward the end of the document on page 65 and discusses the original construction of the highway from 1922 – 1938. I think that should help put the resource into context for you though please feel free to reach out if you feel you need any additional info.

I hope this helps you to accurately assess our request and respond to this project in a meaningful way. If you have any additional questions or concerns don't hesitate to email this address or call back at the number found below.

Best regards,

Daniel T. Leckie
Associate Environmental Planner &
PQS Principal Architectural Historian
California Department of Transportation | District 5
50 Higuera Street | San Luis Obispo| California |93405
Office Phone : (805) 542-4754

[redacted]

Associate Environmental Planner &
PQS Principal Architectural Historian
Caltrans District 5 | San Luis Obispo
Office Phone: (805) 542-4754
<image003.png>

From: Leckie, Daniel@DOT
Sent: Monday, September 21, 2020 11:52 AM
To: Kitty Henderson <kitty@historicbridgefoundation.com>
Subject: RE: Big Sur Bridge Rail Replacement (Garrapata Creek Bridge Pilot Project - EA: 05-1H800)

Ms. Henderson

Thank you for your response to this request. Due to the high profile nature of this project including impacts to the six historic open spandrel Concrete Arch Bridges in the Big Sur Region, our office felt it was appropriate to contact a national advocacy organization for the preservation of historic bridges as part of our due diligence in the information gathering phase of the Section 106 consultation process. Though your organization is not local to Central California, Caltrans felt the Historic Bridge Foundation might have some general interest in the preservation of these historic bridges and/or special knowledge of the engineering history of these particular bridge types.

We apricate your time and attention to this matter. Based on your comments below and with respect to the valuable work your organization does with limited time & resources, Caltrans will hold back on sending the Historic Bridge Foundation any future materials about the specifics of future projects unless you request us to do otherwise. If you wish to comment on future projects including those similarly impacting the Big Creek, Bixby Creek, Rocky Creek, Granite Creek or Malpaso Creek bridges please feel free to contact me directly.

Best regards,

Daniel T. Leckie
Associate Environmental Planner &
PQS Principal Architectural Historian
Caltrans District 5 | San Luis Obispo
Office Phone: (805) 542-4754
<image001.png>

From: Kitty Henderson <kitty@historicbridgefoundation.com>
Sent: Monday, September 21, 2020 11:19 AM
To: Leckie, Daniel@DOT <Daniel.Leckie@dot.ca.gov>
Subject: Re: Big Sur Bridge Rail Replacement (Garrapata Creek Bridge Pilot Project - EA: 05-1H800)

EXTERNAL EMAIL. Links/attachments may not be safe.

Based on the information provided to us, we do not have any "special knowledge" of the area or the bridges. Therefore, we do not feel we can comment on the project(s).

Kitty Henderson
Executive Director
Historic Bridge Foundation

1500 Payne Ave
Austin, Texas 78757
512 407 8898

On Sep 21, 2020, at 12:35 PM, Leckie, Daniel@DOT <Daniel.Leckie@dot.ca.gov> wrote:

Ms. Henderson,

I just wanted to briefly reach out with a reminder about the Garrapata Creek Bridge (Bridge Number 44-0018) Rail Replacement project (EA: 05-1H800) for which we reached out to you and several other historical organizations via Email and Postal Mail on August 31st, 2020. Caltrans has requested comments from your organization on this upcoming project (which is described in the email below as well as the attached documentation) and is hoping to gather all comments from potentially interested parties and organizations with special knowledge of the area, including the Historic Bridge Foundation, by Monday October 5th, 2020.

Thank you for your time and we look forward to hearing your valued feedback.

Sincerely,

Daniel T. Leckie
Associate Environmental Planner &
PQS Principal Architectural Historian
California Department of Transportation | District 5
50 Higuera Street | San Luis Obispo| California |93405
Office Phone : (805) 542-4754
<image002.png>

From: Leckie, Daniel@DOT
Sent: Monday, August 31, 2020 4:09 PM
To: kitty@historicbridgefoundation.com
Subject: Big Sur Bridge Rail Replacement (Garrapata Creek Bridge Pilot Project - EA: 05-1H800)

Dear Ms. Henderson,

The California Department of Transportation (Caltrans) is currently proposing the pilot project in a series of six (6) separate upcoming undertakings. The Garrapata Creek Bridge (Bridge Number 44-0018) Rail Replacement will be the first project intended to gradually replace all the concrete baluster bridge rails for six (6) historic open spandrel reinforced concrete arch bridges along State Route 1 (SR-1) in Monterey County. The purpose of the project(s) will be to replace the existing nonstandard concrete baluster bridge rails and approach rails with new railing that meets current traffic safety standards while also retaining a design that is as close as possible to the original railing design. Please see the letter and documents attached to this email for more info. These documents have also been forwarded to the following postal address:

Kitty Henderson
Executive Director

Historic Bridge Foundation
P.O. Box 66245
Austin, Texas 78766

At this early stage Caltrans is performing a tiered evaluation of these projects, with the intention of streamlining the environmental review and evaluating any potential cumulative impacts, growth-inducing impacts, and irreversible significant effects on the environment of subsequent projects. At this time Caltrans is providing a general notification of these six (6) upcoming projects and will provide additional information about each specific project as details are developed for each individual undertaking in Tier II. Caltrans is also providing specific (Tier II) notification for the Garrapata Creek Bridge (No. 44-0018) which is currently proposed to receive replacement bridge rails and detailed studies for the Garrapata Bridge Rail Replacement Project (EA: 1H800) are currently underway.

In keeping with project scheduling deadlines, Caltrans is kindly requesting your response regarding the Garrapata Creek Bridge rail replacement project (05-1H800) specifically by **October 5th, 2020.** Caltrans will provide additional notification during bridge specific (tier II) studies for all other individual bridge rail replacement projects as those undertakings are developed in the future.

Please feel free to reach by the email address or phone number in my signature line below with any questions or comments about this upcoming project. Thank you for your valued participation.

Sincerely,

Daniel T. Leckie
Associate Environmental Planner
Principal Architectural Historian
Caltrans District 5
50 Higuera Street
San Luis Obispo CA 93401
P: (805) 542-4754.
E: Daniel.Leckie@dot.ca.gov

<Attachment 1 - Mapping.pdf><Attachment 3 - Images.pdf><1H800_toHistBridgeFound_Signed.pdf>

<Attachment 3 - Photos and Renderings.pdf>

DEPARTMENT OF TRANSPORTATION
CALTRANS DISTRICT 5
50 HIGUERA STREET
SAN LUIS OBISPO, CA 93401-5415
PHONE (805) 549-3101
FAX (805) 549-3329
TTY 711
http://www.dot.ca.gov/dist05/

Making Conservation a California Way of Life.

August 31st, 2020

James Perry
Curator & Archivist
Monterey County Historical Society
P.O. Box 3576
Salinas, CA 93912

General Analysis (Tier I) for the
Big Sur Bridge Rail Replacement Project(s)
Monterey County, California
MON-001-PM-28.1-67.9
&
Specific Analysis (Tier II) for the
Garrapata Creek Bridge Rail Replacement Project
Monterey County, California
EA: 05-1H800 / EFIS: 05-1600-0163
MON-001-PM-63.0

Dear Mr. Perry:

The California Department of Transportation (Caltrans) is currently proposing the pilot project in a series of six (6) separate upcoming undertakings. The Garrapata Creek Bridge (Bridge Number 44-0018) Rail Replacement will be the first project intended to gradually replace all of the concrete baluster bridge rails for six (6) historic open spandrel reinforced concrete arch bridges along State Route 1 (SR-1) in Monterey County. The six historic bridges are located between post miles (PM) 28.1 and 67.9 and include the following structures:

- Garrapata Creek Bridge at PM 63.0 (Bridge Number 44-0018); (the pilot project & currently proposed)
- Big Creek Bridge at PM 28.1 (Bridge Number 44-0056);
- Bixby Creek Bridge at PM 59.4 (Bridge Number 44-0019);
- Rocky Creek Bridge at PM 60.0 (Bridge Number 44-0036);
- Granite Canyon Bridge at PM 64.3 (Bridge Number 44-0012);
- Malpaso Creek Bridge at PM 67.9 (Bridge Number 44-0017);

The original concrete railing on the six historic bridges does not meet the current modern safety standards set by the Manual for Assessing Safety Hardware (MASH) and will be replaced with a new railing designed to meet these standards. The Manual for Assessing Safety Hardware (MASH) is a nationwide standard that was implemented by the Federal Highway Administration (FHWA) and the American Association of State Highway Transportation Officials (AASHTO) in 2009 (updated in 2016). MASH sets the standards for highway safety equipment, including bridge rails, guardrails, and other safety features. Newly adopted MASH standards have mandated that all new installations of roadside safety devices on high-speed roadways, including bridge railing, must meet a new higher standard for crash testing for all projects conducted after December 31st, 2019, without exception.

The purpose of the project(s) will be to replace the existing nonstandard concrete baluster bridge rails and approach rails with new railing that meets current traffic safety standards while also retaining a design that is as close as possible to the original railing design. Caltrans is committed to choosing a new MASH compliant railing style that is context sensitive and will be compatible with the character of the Big Sur region, the historic bridges themselves, and within the Carmel-San Simeon Highway Historic District (CSSHHD). Caltrans structures design engineers are currently developing a new bridge rail that is designed specifically to replicate the design of the historic rails as closely as possible while also meeting the new MASH crashworthiness standards. The new Caltrans rail design

(Type 86H) is currently undergoing crash testing. A second new rail design developed by the Texas Department of Transportation to replicate historic bridge rail designs (Type C412) is also under consideration. (See Attachment 2 for renderings of the new bridge rail designs).

At this early stage Caltrans is performing a tiered evaluation of these projects, with the intention of streamlining the environmental review and evaluating any potential cumulative impacts, growth-inducing impacts, and irreversible significant effects on the environment of subsequent projects. At this time Caltrans is providing a general notification of these six (6) upcoming projects and will provide additional information about each specific project as details are developed for each individual undertaking in Tier II. Caltrans is also providing specific (Tier II) notification for the Garrapata Creek Bridge (No. 44-0018) which is currently proposed to receive replacement bridge rails. Detailed studies for the Garrapata Creek Bridge Rail Replacement Project (EA: 05-1H800) are currently underway. At this time, additional railing replacement projects have not yet been proposed for the other five bridges and may be occurring several years in the future.

Caltrans is interested in learning whether your organization has special interest in, or special knowledge of these or any other resource within the project study area that should be considered during our architectural studies. If you have questions or concerns, please do not hesitate to contact me at Daniel.leckie@dot.ca.gov or at (805) 542-4754. In keeping with project scheduling deadlines, Caltrans is kindly requesting your response regarding the Garrapata Creek Bridge rail replacement project (05-1H800) specifically by October 5th, 2020. This letter also serves as a notification for the five other upcoming bridge rail replacement projects, however Caltrans will provide additional notification during bridge specific (tier II) studies for all other individual bridge rail replacement projects as those undertakings are developed in the future.

Thank you for your participation.

Sincerely,

Daniel T. Leckie
Associate Environmental Planner (Architectural History)

Enc: Map of project study area
Photos/drawings of original and new bridge rail designs

cc:

Mary Trotter
Big Sur Historical Society
PO Box 176
Big Sur, CA 93920

Carmel Heritage Society
PO BOX 701
Carmel, CA 93921

Kitty Henderson
Executive Director
Historic Bridge Foundation
P.O. Box 66245
Austin, Texas 78766

Craig Spencer
Monterey County
Historic Resources Review Board
1441 Schilling Place
Salinas, CA 93901

Leckie, Daniel@DOT

From: Monterey County Historical Society <mchs@redshift.com>
Sent: Tuesday, September 22, 2020 9:00 AM
To: Leckie, Daniel@DOT
Subject: Re: Big Sur Bridge Rail Replacement (Garrapata Creek Bridge Pilot Project - EA: 05-1H800)

EXTERNAL EMAIL. Links/attachments may not be safe.

Daniel,

We reviewed the materials that you mailed to us and have no comments/concerns.

Kind Regards,
James Perry
Executive Director
Monterey County Historical Society
831-757-8085
P.O. Box 3576
Salinas, CA 93912
mchsmuseum.com/salinas

On Sep 21, 2020, at 10:33 AM, Leckie, Daniel@DOT <Daniel.Leckie@dot.ca.gov> wrote:

Mr. Perry,

I just wanted to briefly reach out with a reminder about the Garrapata Creek Bridge (Bridge Number 44-0018) Rail Replacement project (EA: 05-1H800) for which we reached out to you and several other historical organizations via Email and Postal Mail on August 31st, 2020. Caltrans has requested comments from your organization on this upcoming project (which is described in the email below as well as the attached documentation) and is hoping to gather all comments from potentially interested parties and organizations with special knowledge of the area, including the Monterey County Historical Society, by Monday October 5th, 2020.

Thank you for your time and we look forward to hearing your valued feedback.

Sincerely,

Daniel T. Leckie
Associate Environmental Planner &
PQS Principal Architectural Historian
California Department of Transportation | District 5
50 Higuera Street | San Luis Obispo| California |93405
Office Phone : (805) 542-4754
<image002.png>

From: Leckie, Daniel@DOT
Sent: Monday, August 31, 2020 4:11 PM
To: James Perry <mchs@redshift.com>
Subject: Big Sur Bridge Rail Replacement (Garrapata Creek Bridge Pilot Project - EA: 05-1H800)

Dear Mr. Perry,

The California Department of Transportation (Caltrans) is currently proposing the pilot project in a series of six (6) separate upcoming undertakings. The Garrapata Creek Bridge (Bridge Number 44-0018) Rail Replacement will be the first project intended to gradually replace all the concrete baluster bridge rails for six (6) historic open spandrel reinforced concrete arch bridges along State Route 1 (SR-1) in Monterey County. The purpose of the project(s) will be to replace the existing nonstandard concrete baluster bridge rails and approach rails with new railing that meets current traffic safety standards while also retaining a design that is as close as possible to the original railing design. Please see the letter and documents attached to this email for more info. These documents have also been forwarded to the following postal address:

James Perry
Curator & Archivist
Monterey County Historical Society
P.O. Box 3576
Salinas, CA 93912

At this early stage Caltrans is performing a tiered evaluation of these projects, with the intention of streamlining the environmental review and evaluating any potential cumulative impacts, growth-inducing impacts, and irreversible significant effects on the environment of subsequent projects. At this time Caltrans is providing a general notification of these six (6) upcoming projects and will provide additional information about each specific project as details are developed for each individual undertaking in Tier II. Caltrans is also providing specific (Tier II) notification for the Garrapata Creek Bridge (No. 44-0018) which is currently proposed to receive replacement bridge rails and detailed studies for the Garrapata Bridge Rail Replacement Project (EA: 1H800) are currently underway.

In keeping with project scheduling deadlines, Caltrans is kindly requesting your response regarding the Garrapata Creek Bridge rail replacement project (05-1H800) specifically by **October 5th, 2020.** Caltrans will provide additional notification during bridge specific (tier II) studies for all other individual bridge rail replacement projects as those undertakings are developed in the future.

Please feel free to reach by the email address or phone number in my signature line below with any questions or comments about this upcoming project. Thank you for your valued participation.

Sincerely,

Daniel T. Leckie
Associate Environmental Planner
Principal Architectural Historian
Caltrans District 5
50 Higuera Street
San Luis Obispo CA 93401
P: (805) 542-4754.
E: Daniel.Leckie@dot.ca.gov

DEPARTMENT OF TRANSPORTATION
CALTRANS DISTRICT 5
50 HIGUERA STREET
SAN LUIS OBISPO, CA 93401-5415
PHONE (805) 549-3101
FAX (805) 549-3329
TTY 711
http://www.dot.ca.gov/dist05/

Making Conservation a California Way of Life.

August 31st, 2020

Craig Spencer
Monterey County
Historic Resources Review Board
1441 Schilling Place
Salinas, CA 93901

General Analysis (Tier I) for the
Big Sur Bridge Rail Replacement Project(s)
Monterey County, California
MON-001-PM-28.1-67.9
&
Specific Analysis (Tier II) for the
Garrapata Creek Bridge Rail Replacement Project
Monterey County, California
EA: 05-1H800 / EFIS: 05-1600-0163
MON-001-PM-63.0

Dear Mr. Spencer:

The California Department of Transportation (Caltrans) is currently proposing the pilot project in a series of six (6) separate upcoming undertakings. The Garrapata Creek Bridge (Bridge Number 44-0018) Rail Replacement will be the first project intended to gradually replace all of the concrete baluster bridge rails for six (6) historic open spandrel reinforced concrete arch bridges along State Route 1 (SR-1) in Monterey County. The six historic bridges are located between post miles (PM) 28.1 and 67.9 and include the following structures:

- Garrapata Creek Bridge at PM 63.0 (Bridge Number 44-0018); (the pilot project & currently proposed)
- Big Creek Bridge at PM 28.1 (Bridge Number 44-0056);
- Bixby Creek Bridge at PM 59.4 (Bridge Number 44-0019);
- Rocky Creek Bridge at PM 60.0 (Bridge Number 44-0036);
- Granite Canyon Bridge at PM 64.3 (Bridge Number 44-0012);
- Malpaso Creek Bridge at PM 67.9 (Bridge Number 44-0017);

The original concrete railing on the six historic bridges does not meet the current modern safety standards set by the Manual for Assessing Safety Hardware (MASH) and will be replaced with a new railing designed to meet these standards. The Manual for Assessing Safety Hardware (MASH) is a nationwide standard that was implemented by the Federal Highway Administration (FHWA) and the American Association of State Highway Transportation Officials (AASHTO) in 2009 (updated in 2016). MASH sets the standards for highway safety equipment, including bridge rails, guardrails, and other safety features. Newly adopted MASH standards have mandated that all new installations of roadside safety devices on high-speed roadways, including bridge railing, must meet a new higher standard for crash testing for all projects conducted after December 31st, 2019, without exception.

The purpose of the project(s) will be to replace the existing nonstandard concrete baluster bridge rails and approach rails with new railing that meets current traffic safety standards while also retaining a design that is as close as possible to the original railing design. Caltrans is committed to choosing a new MASH compliant railing style that is context sensitive and will be compatible with the character of the Big Sur region, the historic bridges themselves, and within the Carmel-San Simeon Highway Historic District (CSSHHD). Caltrans structures design engineers are currently developing a new bridge rail that is designed specifically to replicate the design of the historic rails as closely as possible while also meeting the new MASH crashworthiness standards. The new Caltrans rail design

(Type 86H) is currently undergoing crash testing. A second new rail design developed by the Texas Department of Transportation to replicate historic bridge rail designs (Type C412) is also under consideration. (See Attachment 2 for renderings of the new bridge rail designs).

At this early stage Caltrans is performing a tiered evaluation of these projects, with the intention of streamlining the environmental review and evaluating any potential cumulative impacts, growth-inducing impacts, and irreversible significant effects on the environment of subsequent projects. At this time Caltrans is providing a general notification of these six (6) upcoming projects and will provide additional information about each specific project as details are developed for each individual undertaking in Tier II. Caltrans is also providing specific (Tier II) notification for the Garrapata Creek Bridge (No. 44-0018) which is currently proposed to receive replacement bridge rails. Detailed studies for the Garrapata Creek Bridge Rail Replacement Project (EA: 05-1H800) are currently underway. At this time, additional railing replacement projects have not yet been proposed for the other five bridges and may be occurring several years in the future.

Caltrans is interested in learning whether your organization has special interest in, or special knowledge of these or any other resource within the project study area that should be considered during our architectural studies. If you have questions or concerns, please do not hesitate to contact me at Daniel.leckie@dot.ca.gov or at (805) 542-4754. In keeping with project scheduling deadlines, Caltrans is kindly requesting your response regarding the Garrapata Creek Bridge rail replacement project (05-1H800) specifically by October 5th, 2020. This letter also serves as a notification for the five other upcoming bridge rail replacement projects, however Caltrans will provide additional notification during bridge specific (tier II) studies for all other individual bridge rail replacement projects as those undertakings are developed in the future.

Thank you for your participation.

Sincerely,

Daniel T. Leckie
Associate Environmental Planner (Architectural History)

Enc: Map of project study area
Photos/drawings of original and new bridge rail designs

cc:

Mary Trotter
Big Sur Historical Society
PO Box 176
Big Sur, CA 93920

Carmel Heritage Society
PO BOX 701
Carmel, CA 93921

Kitty Henderson
Executive Director
Historic Bridge Foundation
P.O. Box 66245
Austin, Texas 78766

James Perry
Curator & Archivist
Monterey County Historical Society
P.O. Box 3576
Salinas, CA 93912

MONTEREY COUNTY
RESOURCE MANAGEMENT AGENCY
Carl P. Holm, AICP, Director

LAND USE & COMMUNITY DEVELOPMENT | PUBLIC WORKS & FACILITIES | PARKS
1441 Schilling Place, South 2nd Floor (831)755-4800
Salinas, California 93901-4527 www.co.monterey.ca.us/rma

October 29, 2020

Daniel Leckie
California Department of Transportation
50 Higuera Street
San Luis Obispo, California 93401

Subject: Section 106 Consultation on the Bridge Rail Replacement, Highway 1 in Big Sur

Dear Mr. Leckie,

Thank you for providing Monterey County the opportunity to review the proposed Highway 1 Big Sur bridge rail replacement project. We understand CalTrans is proposing replacement of bridge rails on six historic bridges in the Big Sur area:

1. Garrapata Creek Bridge
2. Big Creek Bridge
3. Bixby Bridge
4. Rocky Creek Bridge
5. Granite Canyon Bridge
6. Malpaso Creek Bridge

These bridges are an integral part of majesty of the Big Sur coastline; viewed and photographed by tens of thousands of visitors every year. Not only are they found eligible for listing on the National Register of Historic Resources; their timeless design represents a sense of place and time important to the scenic highway and tourist industry. Their beauty is unique to site and structure, creating a visual rhythm and proportion. Their "Arched window design" and "smooth texture finish" are iconic, key design features.

For these reasons, Monterey County is committed to working with CalTrans to preserve the historic integrity of the bridges, preserve views along Highway 1 and protect motorists to the maximum extent possible.

As part of the Section 106 consultation, the conceptual proposal for the Garrapata Bridge Rail replacement (first of the bridge rail replacement projects), was reviewed by the Monterey County Historic Resources Review Board (HRRB). Following are our comments on the Garrapata Bridge Rail and comments for the reasonably foreseeable future projects on the other five bridges being considered. We do expect to be notified when we can make further comments on the Garrapata project and the entire Bridge series replacement project.

<u>Project justification</u> - The County needs to fully understand the need for the bridge rail replacement. The analysis should include but not be limited to:

- An in-depth review and discussion with FHA on consideration of historic architecture as a means to compliance with MASH and ASHTO standards;
- Details on the condition of the existing bridge rails, including photographic evidence;
- Review of Highway speeds and potential reduction of speed for each bridge as a means of providing flexibility in design solutions for reinforcement, replacement in kind, or design of the replacement rails (if needed); and
- A detailed discussion of why typical historic preservation building standards are not possible in this situation with documentation of efforts on coordination with FHA and highway speeds.

Evaluation and documentation – Review of the project would benefit from more detailed plans and documentation including but not limited to:

- Elevations and photographs that show the interior and exterior views of the existing bridge rails. There are features of the rail that reflect the vertical structural elements of the bridge that need to be understood and documented;
- Original drawings for the bridge and railing if available;
- Detail the full cross section of the rail and bridge deck to see the complete impact of any designs proposed; and
- Detailed historic analysis and report for each bridge prepared by a qualified historian.

Environmental Review – The County supports CalTrans decision to prepare an Environmental Impact Report. Please include Monterey County on the list of responsible agencies and interested parties. The EIR should consider at a minimum:

- Cumulative considerations of rail replacement for ***all six*** historic bridges;
- Alternatives analysis including a no project alternative; Highway speed reductions given circumstances occurring at each bridge; Historic Preservation design and engineering standard exceptions; and options to repair and reinforce the existing rails or replace in kind; and
- Effects on historic resources (defining features of the bridges); effects on the critical viewshed in Big Sur; and compatibility with the Coastal Act, Big Sur Land Use Plan and Coast Highway Management Plan.

Replacement Rail Design – If, after consideration and analysis of the project's need and detailed alternatives, replacement of the bridge rails is determined to be necessary, the County reserves the ability to review and comment upon each bridge's rail designs, prior to selection of a final design. Building on the information and comments above here are our *preliminary* comments on potential new bridge rail designs:

- Rail scale and proportions are essential relationships in any new bridge design.
- Keep in mind railings are just not something attached to the top of the bridge deck;
- We suggest CalTrans work with the local community as well as Monterey County to design bridge rails to fit the character of the structures and the surroundings. These community members should include Big Sur Coast Multi-Agency Committee (BSMAC), and the local Big Sur Land Use Advisory Committee (LUAC). Monterey County is willing to set these discussions on those agencies' agendas.
- Of the current options presented to Monterey County, the "C411" rail design appears the most consistent option at this time. Although the C411 design is engineered for speeds of up to 45 miles per hour, the County believes some bridges warrant reduced speeds where there are curves or heavily used turnouts which slow traffic near the bridges. We strongly believe all travelers along Highway will much rather slow down to enjoy the beautiful

views – including the bridge design (including the rails) rather than seeing the visual shock of foreign elements which impact bridges' character;

- We ask that CalTrans coordinate with the County on the final bridge rail design. We've successfully worked with CalTrans in the past regarding the Moss Landing Island Bridge and the Bixby Bridge seismic retrofit project.
- Final design options should be presented to Monterey County with sufficient flexibility to amend the design before a final designed is selected;

We appreciate the opportunity to comment on this project, we look forward to working with CalTrans to find the most appropriate solution for safety, historic preservation, protection of our treasured Big Sur coast line and peoples' lives. Please contact me if you have any questions, we are happy to talk with you.

Sincerely,

Craig Spencer, Planning Services Manager
RMA – Planning
Email: spencerc@co.monterey.ca.us
Phone: (831) 755-5233

Cc: HRRB Members, Carl Holm, Randell Ishii, Shannon Lauchner

DEPARTMENT OF TRANSPORTATION
CALTRANS DISTRICT 5
50 HIGUERA STREET
SAN LUIS OBISPO, CA 93401-5415
PHONE (805) 549-3101
FAX (805) 549-3329
TTY 711
http://www.dot.ca.gov/dist05/

Making Conservation a California Way of Life.

December 10th, 2020

Craig Spencer
Monterey County
Historic Resources Review Board
1441 Schilling Place
Salinas, CA 93901

Notice of Adverse Effect and Mitigation Proposal
Garrapata Creek Bridge Rail Replacement Project
Monterey County, California
EA: 05-1H800 / EFIS: 05-1600-0163
MON-001-PM-63.0

Dear Mr. Spencer:

As per the previous letter from our office dated August 31st 2020, The California Department of Transportation (Caltrans) is currently proposing to replace the original railing on the Garrapata Creek Bridge (Bridge Number 44-0018) in Monterey County, on State Route 1 (SR-1) north of Big Sur. The Garrapata Creek Bridge Rail Replacement Project (EA: 05-1H800) will be the first project intended to gradually replace all of the concrete baluster bridge rails for six (6) historic open-spandrel reinforced-concrete arch bridges along SR-1 in Monterey County. As the dimensions of the original bridge rails are not compliant with modern standards in the Manuel for Assessing Safety Hardware (MASH) set by the American Association of State Highway and Transportation Officials (AASHTO), it has been determined the bridge railing cannot be replaced in kind, and will require a new railing with different dimensions. Specifically, the new railing will include a larger base and baluster and smaller arched openigs, in order to meet the current safety standards. Despite the required changes, Caltrans is committed to choosing a railing type that is as compatible with the historic bridge design and scenic corridor as possible.

The Garrapata Creek Bridge is a historic property that is eligible for the National Register of Historic Places (NRHP) and the California Register of Historical Resources (CRHR) under NRHP/CRHR significance criterion A/1 in the area of transportation and criterion C/3 as a distinctive example of an open spandrel reinforced concrete arch bridge in California. Furthermore, the bridge is also a contributing element to the Carmel San-Simeon Highway Historic District (CSSHHD), a historic property consisting of over 200 individual elements, such as rubble stone masonry headwalls, retaining walls, parapet walls, drinking fountains as well as seven (7) reinforced concrete arch bridges known collectively as the "Big Sur Arches". The reinforced concrete railings, with their arched window design and smooth texture finish, are a noted character defining feature of the historic Garrapata Creek Bridge. Because the original bridge rails cannot be repaired or replaced in kind, Caltrans has determined this project will have an Adverse Effect to the Garrapata Creek Bridge.

In order to consider, the effects of this undertaking on historic properties, the adverse effect to the Garrapata Creek Bridge will be resolved through implementation of mitigation measures. These mitigation measures are to be outlined in a Memorandum of Agreement (MOA) which will be executed with the State Historic Preservation Office (SHPO) sometime in early 2021. Caltrans is currently considering proposing the mitigation measures for the Garrapata Creek Bridge Rail Replacement Project to include:

(1) Recordation of the bridge's current condition via the Historic American Engineering Record (HAER) to include written and photographic documentation;

(2) Production of Individual DPR 523 inventory forms for all seven (7) concrete arch bridges within the Carmel Simeon Highway Historic District (CSSHHD). All seven (7) Big Sur Arches were determined to be eligible for the NRHP/CRHR as part of the Caltrans Statewide Historic Bridge Inventory without a detailed Historic Resources Evaluation Report for the individual resources. The current best information on the bridges is recorded on the CSSHHD district wide DPR 523 Inventory Form, for which the bridges are contributing elements. In order to better understand the unique history of each of the seven (7) Big Sur Arches, Caltrans is proposing to do individual analysis of all seven (7) structures. This measure is specifically in response to a request by the Monterey County Historic Resources Review Board in their October 29th, 2020 letter for a "detailed historic analysis and report for each bridge prepared by a qualified historian". The bridges to be individually researched, analyzed, and reported on will specifically include:

- Big Creek Bridge (1938) - PM 28.1, Bridge Number 44-0056
- Bixby Creek Bridge (1932) - PM 59.4, Bridge Number 44-0019
- Rocky Creek Bridge (1932) - PM 60.0, Bridge Number 44-0036
- Garrapata Creek Bridge (1931) - PM 63.0, Bridge Number 44-0018
- Granite Canyon Bridge (1932) - PM 64.3, Bridge Number 44-0012
- Malpaso Creek Bridge (1935) - PM 67.9, Bridge Number 44-0017
- Wildcat Creek Bridge (1933) – PM 69.0, Bridge Number 44-0016
  - *Note: The Wildcat Bridge, a closed spandrel concrete arch bridge, is not part of the Bridge Rail Replacement program at this time. Though it will not be impacted by an upcoming bridge rail replacement project, it is included because it is also a contributor to the CSSHHD and thematically similar to the other Big Sur Arches, with a slightly different design.*

(3) The production of an interpretive website to highlight the history of the Seven Big Sur Arches. The website will include historic and modern photographs, historic contexts developed in the individual historic analysis reports, and additional information on the engineering and transportation history of the bridges.

a. The website will be continually updated along with all other mitigations as future bridge rail replacement projects are proposed overtime.
b. Additionally, the website will also contain at least a page with outreach information in the form of lesson plans for elementary school aged students that focuses on historic and/or other Scientific, Technological, Engineering, or Mathematical (STEM) activities within a historic context.

At this stage, Caltrans is interested in receiving feedback from all consulting parties regarding the proposed mitigation measures. Caltrans kindly asks all comments on proposed mitigation are submitted by Wednesday December 30th, 2020 for consideration in the final draft Memorandum of Agreement (MOA) with the SHPO.

Thank you for your participation.

Sincerely,

Daniel T. Leckie
Associate Environmental Planner (Architectural History)

cc: Mary Trotter
Big Sur Historical Society
PO Box 176
Big Sur, CA 93920

From: Spencer, Craig x5233
To: Leckie, Daniel@DOT
Subject: RE: Follow up to HRRB Meeting (Garrapata Creek Bridge Rail Replacement Project 1H800)
Date: Tuesday, October 6, 2020 12:19:50 PM
Attachments: image001.png
image002.png

EXTERNAL EMAIL. Links/attachments may not be safe.

Received. Thank you

Craig Spencer
Monterey County, RMA-Planning Division
Phone: (831) 755-5233
Email: spencerc@co.monterey.ca.us

From: Leckie, Daniel@DOT <Daniel.Leckie@dot.ca.gov>
Sent: Tuesday, October 6, 2020 12:16 PM
To: Spencer, Craig x5233 <SpencerC@co.monterey.ca.us>
Subject: RE: Follow up to HRRB Meeting (Garrapata Creek Bridge Rail Replacement Project 1H800)

[CAUTION: This email originated from outside of the County. Do not click links or open attachments unless you recognize the sender and know the content is safe.]

Mr. Spencer,

Here is the follow up with the CSSHHD Inventory form.

Thank you,

Daniel T. Leckie
Associate Environmental Planner &
PQS Principal Architectural Historian
Caltrans District 5 | San Luis Obispo
Office Phone: (805) 542-4754

From: Leckie, Daniel@DOT
Sent: Tuesday, October 6, 2020 12:14 PM
To: 'Spencer, Craig x5233' <SpencerC@co.monterey.ca.us>
Subject: FW: Follow up to HRRB Meeting (Garrapata Creek Bridge Rail Replacement Project 1H800)

Mr. Spencer,

I wanted to thank you again for setting up a productive and informative meeting between the Caltrans District 5 Cultural Resources Team and the Monterey County Historic Resources Review Board last Thursday (10/1). It is engagement such as this that allows us to truly take the valuable comments of all stake holders into account during the project development process, and I believe helps make our projects the best they can be for the communities we serve so we very much do apricate your valued engagement and participation.

I also wanted to follow up on a few items that were brought up at the meeting last week:

1. First I wanted to forward the Department of Parks and Recreation 523 Historic Inventory form for the Carmel San Simeon Highway Historic District (CSSHHD) of which the 7 concrete arch bridges are all contributing structures. The document is heavily focused on a 2006 inventory of original highway features, such as rock masonry culvert headwalls and parapet walls, however there is some enhanced discussion of the contributing bridges on pages 53 – 62. The historic context for the district as a whole can be found on page 64 and helps round out that discussion. Hopefully this document will help inform the boards official comments in your formal letter to come sometime in the next few months. ***** This was too large to attach with everything else so I will follow up with the DPR Inventory form *****
2. I also wanted to attach some updated renderings from our design team. The 6 attached images were produced to update some earlier images we sent to out with the initial request in response to comments from myself and my colleague Lindsay Kozub to include better demonstration of the option to add arched openings on the c412 type railings as well as better reflecting the unique color of the original Garrapata Creek Bridge & its railings based on a palate we provided. These are by no means a final or complete depiction of what the constructed railing will look like as the rendering software is limited in its ability to produce accurate textures / colors / etc, but is meant to give an better idea of how the product will appear. However, it should be noted these images and the designs for the bridge rails themselves are still being refined.
3. For the question about Big Sur Multi Agency Advisory Committee , yes, we have shared information with BSMAAC every quarter since the currnt project manager, Carla Yu, has been working on this project (so going back a few years). Attached are the latest updates for the BSMAAC reports, so you can update the Board that Caltrans has in fact been in contact with the agency and they should be aware of the upcoming project. I apologize for not being abreast to this info during the meeting, there are so many moving parts on this project its hard to keep up with everything.
4. Just FYI we are working on getting together info from the traffic safety folks on collision data in the area which was requested, so hopefully I can follow up with that info soon.

Please let me know if you have any additional questions or concerns regarding our meeting last week or if there are any other follow up items I am missing here as much was discussed during the meeting.

Thank you,

Daniel T. Leckie
Associate Environmental Planner &
PQS Principal Architectural Historian
California Department of Transportation | District 5
50 Higuera Street | San Luis Obispo| California |93405
Office Phone : (805) 542-4754

From: Spencer, Craig x5233 <SpencerC@co.monterey.ca.us>
Sent: Wednesday, August 26, 2020 5:14 PM
To: Leckie, Daniel@DOT <Daniel.Leckie@dot.ca.gov>; Swanson, Brandon xx5334 <SwansonB@co.monterey.ca.us>
Subject: RE: CalTrans Request to Present to HRRB

EXTERNAL EMAIL. Links/attachments may not be safe.

The mailing address here is:
1441 Shilling Place, 2nd Floor
Salinas CA, 93901

Please send to my attention.

Thank you

Craig Spencer
Monterey County, RMA-Planning Division
Phone: (831) 755-5233
Email: spencerc@co.monterey.ca.us

From: Leckie, Daniel@DOT <Daniel.Leckie@dot.ca.gov>
Sent: Wednesday, August 26, 2020 9:55 AM
To: Spencer, Craig x5233 <SpencerC@co.monterey.ca.us>; Swanson, Brandon xx5334 <SwansonB@co.monterey.ca.us>
Subject: RE: CalTrans Request to Present to HRRB

[CAUTION: This email originated from outside of the County. Do not click links or open attachments unless you recognize the sender and know the content is safe.]
Mr. Spencer,

Thank you for your reply. I will be following up with some information about an upcoming Caltrans project in the near future. In the meantime, could you possibly provide a postal address in addition to this email where mail can be forwarded?

Thank you and I look forward to our conversation.

Best,

Daniel T. Leckie

Associate Environmental Planner &
PQS Principal Architectural Historian
California Department of Transportation | District 5
50 Higuera Street | San Luis Obispo| California |93405
Office Phone : (805) 542-4754

From: Spencer, Craig x5233 <SpencerC@co.monterey.ca.us>
Sent: Wednesday, August 26, 2020 9:40 AM
To: Swanson, Brandon xx5334 <SwansonB@co.monterey.ca.us>; Leckie, Daniel@DOT <Daniel.Leckie@dot.ca.gov>
Subject: RE: CalTrans Request to Present to HRRB

EXTERNAL EMAIL. Links/attachments may not be safe.

Hello Daniel,

I would be happy to help assist with our Historic Board review.
Please feel free to call or email me for more information.

Craig Spencer
Monterey County, RMA-Planning Division
Phone: (831) 755-5233
Email: spencerc@co.monterey.ca.us

From: Swanson, Brandon xx5334 <SwansonB@co.monterey.ca.us>
Sent: Thursday, August 20, 2020 2:04 PM
To: daniel.leckie@dot.ca.gov; Spencer, Craig x5233 <SpencerC@co.monterey.ca.us>
Subject: CalTrans Request to Present to HRRB

Daniel,

It was good to speak with you just now. By way of this email, I am linking you up with Craig Spencer, who currently staffs the HRRB here at the County. Please work through him to get the project you mentioned in front of the HRRB for review.

Thanks,

Brandon Swanson
Monterey County Resource Management Agency
831-755-5334

Leckie, Daniel@DOT

From: Leckie, Daniel@DOT
Sent: Thursday, October 8, 2020 10:55 AM
To: Spencer, Craig x5233
Subject: 1H800 - Follow up Public Hearing for the Historic Resources Review Board (Crash Test Data)
Attachments: CPRA example.png

Mr. Spencer,

I wanted to follow up with the info on how to access the crash data for the Garrapata Creek Bridge. Though I am not authorized to provide this info directly to an outside agency there is a mechanism by which the Historic Resources Review Board can access this data.

For the board to obtain this data they will need to submit a California Public Records Act (CPRA) request through the following website: https://caltrans.mycusthelp.com/WEBAPP/_rs/(S(vpbdrb1y2ir0tga4i3o4px1a))/supporthome.aspx To access the info, follow the link above and once at the webpage click the button for "submit a request" on the left hand side of the screen. Once there you can choose to set up an account or simply submit a request anonymously (the system suggests to create an account incase Caltrans needs to contact you with any questions about your inquiry). This will bring you to the page where you submit your request.

Once on that page, the information needed for our safety officer to run the traffic collision reports will be **County: (Monterey) / State Route Number: (SR-1) / PM Limits: (62.9 – 63.1)** *Note: The bridge is listed at PM 63 which would be near the center of the bridge. Our project manager suggested including a .1 mile range on either side to get a better result with more representative data* **/ Date Range (whatever you want to see … I put 1/1/2000 – 10/1/2020 as an example here)** and **which report: (Table B v. TSAR which is explained below)**.

There are multiple reports that can be run so within the box that says "**Describe the Record(s) Requested"** please specify the report name you're looking for. You can say "table B" which would provide Actual crash data in this location vs a statewide average, or a TSAR which includes information summarized in various tables. The Project Manager for this project also suggested a TSAR report might be more helpful as that has more data about the specific types of accidents in this location, but I'll leave that decision up to the board. Please feel free to reach out if you have any questions about this I can try to find more info about these reports for you if that would be helpful.

Additionally, If the board would like the specific information provided by me specifically as a POC you can specify this in your request "traffic collision history at MON-001-PM62.9 – 63.1 (Garrapata Bridge) provided by Daniel Leckie – D5 Architectural Historian"

I have provided a screenshot of an example of how you might fill out this request form and attached it to this email. I hope that is helpful to you. I put asterisks around any info that might be optional or up to the boards discretion.

I think that's it for now. Please reach out if you have any questions or concerns on this process.

Best,

Daniel T. Leckie
Associate Environmental Planner &
PQS Principal Architectural Historian
Caltrans District 5 | San Luis Obispo

Office Phone: (805) 542-4754

From: Yu, Carla@DOT <carla.yu@dot.ca.gov>
Sent: Wednesday, October 7, 2020 4:47 PM
To: Xiong, Moua@DOT <Moua.Xiong@dot.ca.gov>; Leckie, Daniel@DOT <Daniel.Leckie@dot.ca.gov>
Cc: Senor, Dario A@DOT <dario.senor@dot.ca.gov>; Ostrau, Scott@DOT <Scott.Ostrau@dot.ca.gov>; Kiaha, Krista M@DOT <krista.kiaha@dot.ca.gov>; Wilkinson, Jason J@DOT <jason.wilkinson@dot.ca.gov>
Subject: RE: Notice of Public Hearing for the Historic Resources Review Board

Hello Moua,
Thank you for your prompt attention to this request and the information for how Monterey County Historic Resource Review Board can obtain the information that they are seeking.

I understand that this information has to be requested by the requestor through the California Public Records Act.

@Leckie, Daniel@DOT,
For the postmiles, I would suggest that the Resource board request about 0.1 miles before and after the PM 63.0 for the search, and the postmile GIS webpage may be very helpful with fine tuning the postmile limits as well in case the center of the bridge is not postmile 63.0: http://postmile-internal.dot.ca.gov/PMQT/PMQT_Internal.html?

Also, for the type of report, it depends on what the Resource board is looking for, I think TSAR may be helpful if they want to differentiate type of accidents as the Table B will just give the rates of this location vs the statewide average.

Thank you,

Carla Yu, P.E.
Project Manager
Caltrans District 5
(805) 549-3749

From: Xiong, Moua@DOT <Moua.Xiong@dot.ca.gov>
Sent: Wednesday, October 7, 2020 9:39 AM
To: Yu, Carla@DOT <carla.yu@dot.ca.gov>; Leckie, Daniel@DOT <Daniel.Leckie@dot.ca.gov>
Cc: Senor, Dario A@DOT <dario.senor@dot.ca.gov>; Ostrau, Scott@DOT <Scott.Ostrau@dot.ca.gov>
Subject: RE: Notice of Public Hearing for the Historic Resources Review Board

Hi Carla,

I am working under Dario and I am wanted to clarify the situation. Daniel has traffic collision history at MON-001-PM63.0 (Garrapata Bridge) and would like to share the information with Monterey County Historic Resourced Review Board? If this is an agency outside of Caltrans, they will need to submit a California Public Records Act. (CPRA)
https://caltrans.mycusthelp.com/WEBAPP/_rs/(S(vpbdrb1y2ir0tga4i3o4px1a))/supporthome.aspx
CPRA will be a way to track which documents are being shared outside of Caltrans.

The information needed for me (TASAS Coordinator) to run traffic collision reports are **County-Route-PM Limits, Date Range** and **which report**. There are multiple reports that can be run. Please specify the report name – Table B (Actual vs Statewide rates), TSAR (Accident information summarized in various tables) or a brief description on the nature of the request.

If the agency would like the specific information provided by Daniel, please have the agency specify in their request "traffic collision history at MON-001-PM63.0 (Garrapata Bridge) by Daniel"

If you have anymore questions on traffic collision data, please let me know as I am the TASAS Coordinator for District 05.

Regards,

Moua Xiong
Transportation Engineer
District 5 | Traffic Safety
50 Higuera St, San Luis Obispo, CA 93401
Office: (805) 549-3641

Attachment 13
List of Participants in Aesthetic Design Advisory Committee (ADAC) Meetings

List of Participants in Aesthetic Design Advisory Committee (ADAC) Meetings

Individual	Organization	Title
Angela Chesnut/Jonathan Engleman (alternate)	U.S. Senate	Senator Laird's Office
Sean Drake	California Coastal Commission	Coastal Program Analyst
Erik Lundquist	Monterey County Housing & Community Development Department	Director of Housing & Community Development
Craig Spencer	Monterey County Housing & Community Development Department	Secretary, Monterey County Planning Commission
Mary Trotter	Big Sur Land Use Advisory Committee	
John Scourkes, RA	Monterey County Historic Resources Review Board and Scourkes Architecture	Chairman Monterey County Historic Resources Review Board and member of American Institute of Architects (AIA)
Anneliese Angren	Big Sur Multi-Agency Advisory Council	
Butch Kronlund	Big Sur Byways Organization (BSBO)	Vice-Chair BSBO
Rick Aldinger	Big Sur River Inn	Member of Big Sur Chamber of Commerce
Libby Barnes, RA	De Sola Barnes	Partner of Architecture Firm, member of American Institute of Architects (AIA)
Kent Seavy	Kent L Seavey	Architectural Historian, and author of "Carmel: A History in Architecture"
David Smiley		
Belinda Taluban	Monterey County Historic Resources Review Board	
Abraham Almaw, RA	Caltrans-Bridge Architecture & Aesthetics Branch	Senior Architect
Nicole Bloom	Caltrans-Landscape Architecture	Landscape Architecture Associate
Bob Carr, LA	Caltrans-Landscape Architecture	Visual Specialist
Mitch Dallas	Caltrans- Coastal Resources	Senior Coastal Resource Specialist
Greg Kaderabek, PE	Caltrans-Bridge Railing & Sound Wall Specialist	Senior Bridge Engineer
Kristin Langager, LA	Caltrans-Landscape Architecture	Visual Specialist
Kunjian Li	Caltrans-Bridge Architecture & Aesthetics Branch	Bridge Architecture Associate
Daniel Leckie	Caltrans - Cultural Studies	Associate Architectural Historian
Kimberly Mori, PE	Caltrans-Bridge Railing & Sound Wall Specialist	Transportation Civil Engineer
John Olejnik	Caltrans-Planning-Monterey County	Senior Transportation Planner
Scott Ostrau	Caltrans - Environmental	Project Environmental Coordinator
Isaac Tasabia	Caltrans-Bridge Architecture & Aesthetics Branch	Bridge Architecture Associate
Jason Wilkinson	Caltrans - Environmental	Environmental Manager
Carla Yu, PE	Caltrans - Project Management	Project Manager

Note:
James (Jim) Walters, Tim Green, and Christina McGinnis from Keep Big Sur Wild attended the last meeting.

Attachment 14
ADAC Attendance Record

05-1H800 GARRAPATA BRIDGE RAIL ADAC (Aesthetic Design Advisory Committee) LIST OF INVITEES

Rich Aldinger (Big Sur Chamber of Commerce) *DID NOT REPLY TO INVITATION*
Anneliese Angren (BSMAAC member and South Coast Resident)
Libby Barnes (Architect and Resident)
Angela Chesnut (Senator Laird's Aide)
Martha Diehl (Big Sur Byway Organization) *DECLINED INVITATION*
Sean Drake (California Coast Commission, Coastal Program Analyst)
Butch Kronlund (Vice-Chair Big Sur Byway Organization)
Erik Lundquist (Monterey County Housing and Community Development Director)
John Scourkes (Monterey County Historic Resources Review Board)
Kent Seavey (Architectural Historian) *DID NOT REPLY TO INVITATION*
David Smiley (Big Sur Land Use Advisory Committee)
Craig Spencer (Monterey County Housing and Community Development Chief of Planning)
Belinda Taluban (Monterey County Historic Resources Review Board) *DID NOT REPLY TO INVITATION*
Mary Trotter (BSLUAC-north)

LIST OF PARTICIPANTS AT EACH ADAC MEETING*
***If a participant joined the meeting late their name may not be on the attendance list**

10/5/2021
Anneliese Angren
Libby Barnes
Angela Chestnut
Sean Drake
Craig Spencer
Mary Trotter

10/26/2021
Anneliese Angren
Libby Barnes
Angela Chestnut
Sean Drake
Butch Kronlund
Erik Lundquist
John Scourkes
David Smiley
Craig Spencer
Mary Trotter

11/16/2021
Libby Barnes
Angela Chestnut
Sean Drake
John Scourkes
David Smiley
Craig Spencer

12/7/2021
Libby Barnes
Angela Chestnut
Sean Drake
John Scourkes
David Smiley
Mary Trotter

1/11/2022
Libby Barnes
Sean Drake
John Scourkes
David Smiley
Mary Trotter
Erik Lundquist
Jonathan Engleman (Attended on behalf of Angela Chesnut, Senator Laird's office)

2/22/2022
Libby Barnes
Angela Chestnut
Sean Drake
Jonathan Engleman
Butch Kronlund
Erik Lundquist
John Scourkes
David Smiley
Mary Trotter
Not invited by Caltrans, but attended:
James Walters "Jim", Keep Big Sur Wild
Tim Green, Keep Big Sur Wild and resident
Christina McGinnis, Keep Big Sur Wild

Attachment 15
ADAC Meeting Notes

05-1H800 GARRAPATA BRIDGE RAIL ADAC (Aesthetic Design Advisory Committee) Meeting Notes 10/5/2021

LIST OF PARTICIPANTS*
***If a participant joined the meeting late their name may not be on the attendance list**

Anneliese Angren
Libby Barnes
Angela Chestnut
Sean Drake
Craig Spencer
Mary Trotter

Caltrans Attendees:
Carla Yu
Bob Carr
Nicole Bloom
John Olejnik
Kristen Langager
Daniel Leckie
Abraham Almaw
Kunjian Li
Isaac Tasabia
Kimberly Mori
Jason Wilkinson
Greg Kaderabek
Scott Ostrau
Mitch Dallas

Meeting Notes:
Introductions
ADAC purpose and need discussed. Format for meetings discussed.
Site context discussion about the temporary emergency metal beam guardrail.
Historic context discussion about what the EIR covers.
Regulatory setting discussion about design standard exceptions, safety standards, accident history, repairs.
Referred participants to the FAQ website and to email CT staff with questions prior to next ADAC meeting.
Participants asked for the next meeting to be 2 hours, as this meeting was not enough time.

05-1H800 GARRAPATA BRIDGE RAIL ADAC (Aesthetic Design Advisory Committee) Meeting Notes 10/26/2021

LIST OF PARTICIPANTS*
***If a participant joined the meeting late their name may not be on the attendance list**

Anneliese Angren
Libby Barnes
Angela Chestnut
Sean Drake
Butch Kronlund
Erik Lundquist
John Scourkes
David Smiley
Craig Spencer
Mary Trotter

Caltrans Attendees:
Carla Yu
Bob Carr
John Olejnik
Kristen Langager
Daniel Leckie
Abraham Almaw
Kunjian Li
Isaac Tasabia
Kimberly Mori
Jason Wilkinson
Greg Kaderabek
Scott Ostrau

Meeting Notes:
Introductions
Discussion about accident history and reinforcement options and current safety standards.
Discussion about historic exception and not an option.
Discussion about the size of bridge rail openings and desire for them to be as large as possible.
Discussion about the importance of considering the aesthetics of the bridge from the outside of the barrier, exterior views, and looking at the bridge in its entirety.
Discussion about the environmental document and each bridge looked at individually and as funding is available.
Discussion about precedence setting with this project.
Discussion about maintaining scenic quality.
Discussion about the current rail design appearing heavy and solid.
Discussion of concrete being an important building material during the era of this and other bridges.
Discussion of the WPA work.

Discussion of C412 bridge rail and 86 bridge rail and general aesthetic qualities. Members wanted to see visual heaviness reduced, larger openings. Requested to see simulations of views from outside of the bridge and from car driver perspective.

Discussion of aesthetic principles, concepts, and elements:
New design should:
--speak to the historic quality
--be subordinate to the surroundings
--allow views through
--considerations to the outside of the rail and entire structure
--materials and colors compatible and harmonious with the surroundings
--be a nod to the current historic bridge
--needs to look as close to the existing bridge as possible
--massing and proportion throughout the entire structure from bottom to top as well as color and texture are important
--Balusters give a rhythm to the bridge
--details are extremely important
--understated detail
--texture and feel of richness in quality
--light and airy
--have an open feeling
--maximum space allowed between balusters for openness and see-through quality
--beveling and angles used to get an open feel
--strong posts are larger than the rail and align with the columns below and those are an integral element to the entire bridge structure. The visual pattern aligns strong posts with structure posts
--graceful meeting of the ends of the bridge rails where guardrail attaches

05-1H800 GARRAPATA BRIDGE RAIL ADAC (Aesthetic Design Advisory Committee) Meeting Notes 11/16/2021

LIST OF PARTICIPANTS*
***If a participant joined the meeting late their name may not be on the attendance list**

Libby Barnes
Angela Chestnut
Sean Drake
John Scourkes
David Smiley
Craig Spencer

Caltrans Attendees:
Carla Yu
Nicki Bloom
Bob Carr
Kristen Langager
Daniel Leckie
Kunjian Li
Isaac Tasabia
Kimberly Mori
Greg Kaderabek
Scott Ostrau

Meeting Notes:
Reviewed aesthetic design principles and asked for any additional input.
Reviewed both types of bridge rails being considered.
Presented visual simulations of Type 86H and Type C412.
Discussion about the structural and aesthetic differences between the bridge rail types.
The group asked for side-by-side visual comparisons of the proposed with the existing rails.
Discussions about possibilities of bridge rail opening sizes, railing sizes, baluster sizes, strong post spacing and size and shape.
Discussion about the use of any metal components and issues with historic qualities and traffic safety issues and aesthetic concerns.
Discussion about applying a different safety standard for this bridge and safety constraints and safety standards.
Discussion of strong posts having a taper.
Discussion of bottom rail size.
Presentation of collision data and discussion.
Discussion about what type of concrete will be used and possibility of sandblasting or coloring.
Discussion about strong post and baluster spacing and sizes and standards.
Discussion about SHPO consultation process, CDP process, County review process.

Group asked for presentation at next meeting showing side by side profiles, elevations, sections comparing bridge rail options. Also asked to review these simulations prior to next meeting if possible.

05-1H800 GARRAPATA BRIDGE RAIL ADAC (Aesthetic Design Advisory Committee) Meeting Notes 12/7/2021

LIST OF PARTICIPANTS*
***If a participant joined the meeting late their name may not be on the attendance list**

Libby Barnes
Angela Chestnut
Sean Drake
John Scourkes
David Smiley
Mary Trotter

Caltrans Attendees:
Carla Yu
Nicki Bloom
Bob Carr
Kristen Langager
Daniel Leckie
Kunjian Li
Kimberly Mori
Greg Kaderabek
Scott Ostrau
John Olejnik
Abraham Almaw
Jason Wilkinson
Mitch Dallas

Meeting Notes:
Reviewed the agenda.
Presentation of the photo simulations of bridge rail types 86H and C412. All of the modifications made based on the ADAC's recommendations from the last meeting were discussed.
Discussion of opening sizes.
Discussion of shoulder width.
Discussion of crash testing status of bridge rail types.
Discussion of the view from the driver's perspective being at an angle making the openings appear smaller. Design detail modifications such as chamfers and safety standards discussed.
Discussion of spacing of strong posts.
Discussion of future maintenance and life span design.
Discussion of crash history at this bridge.
Discussion of current state of bridge and corrosive environment and safety testing.
Discussion of concrete color and texture possibilities.
Discussion of using an aesthetic groove and safety standards.
Discussion of sandblasting the finish and minimizing the bulkiness and heaviness.

Discussion of the terminations of the bridge/end blocks and safety standards and aesthetics.
Discussion of date stamp on the bridge and historic standards and avoiding confusion.
Group requested another meeting to look at designs after they are refined further based on the ADAC's recommendations today.

05-1H800 GARRAPATA BRIDGE RAIL ADAC (Aesthetic Design Advisory Committee) Meeting Notes 1/11/2022

LIST OF PARTICIPANTS*
***If a participant joined the meeting late their name may not be on the attendance list**

Libby Barnes
Sean Drake
John Scourkes
David Smiley
Mary Trotter
Erik Lundquist
Jonathan Engleman

Caltrans Attendees:
Carla Yu
Bob Carr
Kristen Langager
Daniel Leckie
Kimberly Mori
Greg Kaderabek
Scott Ostrau
John Olejnik
Abraham Almaw
Jason Wilkinson
Mitch Dallas

Meeting Notes:
Reviewed the agenda.
Presentation of the photo simulations of each type with suggested modifications from the last ADAC meeting. Also presented the end transition options.
Discussion about sandblasting the finish and color options.
Discussion about horizontal beam treatment and breaking it up visually.
Discussion about strong posts and opening size.
Question asked if a 3D model can be made and Caltrans will consider.
Discussion of the height of the rails and opening sizes and number of posts. Height of new rails is the same height as the existing rails.
Discussion of horizontal groove, shadow effects, color, sandblasting, and test panels.
Discussion about CDP process and public review and schedule.
Discussion of date on endblock possibilities, signs, plaque.
Discussion on CDP schedule and public comment and review.
Group requested another meeting to look at designs in a 3D model.

05-1H800 GARRAPATA BRIDGE RAIL ADAC (Aesthetic Design Advisory Committee) Meeting Notes 2/22/2022

LIST OF PARTICIPANTS*
***If a participant joined the meeting late their name may not be on the attendance list**

Libby Barnes
Angela Chestnut
Butch Krondlund
Sean Drake
John Scourkes
David Smiley
Mary Trotter
Erik Lundquist
Jonathan Engleman

Not invited, but attended:
James Walters "Jim" Keep Big Sur Wild
Tim Green resident, Keep Big Sur Wild and resident
Christina McGinnis Keep Big Sur Wild

Caltrans Attendees:
Carla Yu
Bob Carr
Kristen Langager
Nicole Bloom
Daniel Leckie
Kimberly Mori
Greg Kaderabek
Scott Ostrau
Abraham Almaw
Kunjian Li
Jason Wilkinson
Isaac Tasabia

Meeting Notes:
The ADAC process thus far was reviewed as was the request for a recommendation from the ADAC at the conclusion of today's meeting unless the group wanted to continue to an additional meeting.
3D models were presented and differences between the two barrier types were discussed.
Discussion about restoration versus replacement and safety standards.
Discussion about differences between two barrier types and preferences among the members.
ADAC members were happy to see their suggestions incorporated into the bridge rail designs.
ADAC members that belong to organizations that will be evaluating this project for permitting in the future did not contribute to comments or preferences.

ADAC members preferred restoration of the existing bridge as their first choice while recognizing this may not be an option due to safety constraints. With that, they then stated they preferred the 86H over the C412.

Caltrans will draft a memorandum documenting the ADAC's recommendation and will email it to all ADAC members for concurrence.

This page intentionally left blank