Location of Leased Premise **CALANDRA LOOKOUT** **MONTEREY COUNTY**
Agency Department of Forestry & Fire Protection **Real Property** #429

COMMUNICATIONS VAULT LEASE

Lease No. **L-0058**

Lessee County of Monterey

AMENDMENT NO. One

This Amendment No. One to Lease L-0058 (the "Amendment"), dated for reference purposes only, January 21, 2016, is by and between the State of California, acting by and through its Director of General Services (DGS), with the consent of the Department of Forestry and Fire Protection (CAL FIRE), hereinafter collectively referred to as STATE, and County of Monterey, hereinafter referred to as LESSEE.

RECITALS

WHEREAS, the STATE and LESSEE entered into that certain Communications Vault Lease, L-0058, dated June 16, 2014 (the "Lease"), whereby LESSEE leases from the STATE certain premises located at Calandra Lookout, hereinafter referred to as "Calandra LO", in the County of Monterey; and

WHEREAS, LESSEE currently occupies 4 and one-half (4½) communications vault rack spaces together with six (6) antenna positions; and

WHEREAS, the parties hereto desire to amend said Lease for LESSEE's request for modifications to its telecommunications equipment as described in that certain Radio Vault Space Application (TD-312) to switch out two (2) WHIP antennas and to ADD two (2) new WHIP antennas.

NOW, THEREFORE, it is mutually agreed between the parties hereto, that effective March 1, 2016 the Lease shall be amended as follows:

1. **PARAGRAPH 2 (a), "USE" OF THE LEASE**, shall be deleted in its entirety and replaced with the following:

(a) The Premises shall be used during the term hereof solely and only for the purpose of installing, operating and maintaining telecommunications equipment as described in LESSEE's "Radio Vault Space Application" (State Form TD-312) dated September 11, 2015 and approved by the California Office of Emergency Services (CAL OES), Public Safety Communications Office (PSCO), effective October 26, 2015. Said "Radio Vault Space Application" complete with attachments and approval documentation by CAL OES-PSCO are made a part hereof, marked Exhibit "B-1," consisting of thirty-four (34) pages and attached as a part of this Lease. LESSEE shall occupy 4 ½ vault spaces (#'s 11, 12, 13, ½ of 14 and 21) along with 8 antenna positions (#'s 8, 12, 13, 14, 41, 42 43 and 44).

2. **PARAGRAPH 4, "LEASE PAYMENTS" - "RENT SCHEDULE" OF THE LEASE**, shall be deleted in its entirety and replaced with the following:

REVISED RENT SCHEDULE

Period	Term	Due Date	Rent Payable to DGS	Maintenance, and Utilities Payable to CALFIRE
1	July 1, 2015 – June 30, 2016	July 1, 2015	$ 9,551.00	$ 9,551.00
1A	July 1, 2015 – June 30, 2016	*July 1, 2015	*$ 719.00	*$ 719.00
2	July 1, 2016 – June 30, 2017	July 1, 2016	$10,578.00	$10,578.00
3	July 1, 2017 – June 30, 2018	July 1, 2017	$10,895.00	$10,895.00
4	July 1, 2018 – June 30, 2019	July 1, 2018	$11,222.00	$11,222.00
5	July 1, 2019 – June 30, 2020	July 1, 2019	$11,559.00	$11,559.00
6	July 1, 2020 – June 30, 2021	July 1, 2020	$11,906.00	$11,906.00
7	July 1, 2021 – June 30, 2022	July 1, 2021	$12,263.00	$12,263.00
8	July 1, 2022 – June 30, 2023	July 1, 2022	$12,631.00	$12,631.00
9	July 1, 2023 – June 30, 2024	July 1, 2023	$13,010.00	$13,010.00
***PRO-RATED RENT**	**March 1, 2016 – June 30, 2016 (2 new WHIP antennas)**	**March 1, 2016**	**$ 240.00**	**$ 240.00**

3. This Amendment may be executed in separate counterparts, each of which when so executed shall be deemed to be an original. Such counterparts shall, together, constitute and be one and the same instrument.

4. Except as expressly amended herein, all the terms and conditions of said Lease shall remain unchanged and in full force and effect.

THE REMAINDER OF THIS PAGE IS INTENTIONALLY LEFT BLANK.

IN WITNESS WHEREOF, this Amendment has been executed by the parties on the date written below.

STATE OF CALIFORNIA

DIRECTOR OF DEPARTMENT OF
GENERAL SERVICES

By: _____
TONY PSIHOPAIDAS, Assistant Chief
State Owned Leasing & Development

_____
Date Executed

Consent of

DEPARTMENT OF FORESTRY
AND FIRE PROTECTION

By: _____
MARC VAN ZUUK, PLS
Real Property Manager – Chief of Surveys
Technical Services

_____
Date Signed

Recommended for Approval
DEPARTMENT OF GENERAL SERVICES

By: _____
DEBORAH MAC MILLAN
Senior Real Estate Officer

_____
Date Signed

LESSEE

COUNTY OF MONTEREY

By: _____
Contracts/Purchasing Officer

_____
Date Signed

By: _____
Department Head

_____
Date Signed

Approved as to Form:

By: _____
County Counsel

_____
Date Signed

Approved as to Fiscal Provisions:

By: _____
Auditor/Controller

_____
Date Signed

Approved as to Liability Provisions

By: _____
Risk Management

_____
Date Signed

EXHIBIT B-1

AMENDMENT TO LEASE EXHIBIT B - LESSEE'S RADIO VAULT SPACE APPLICATION

Cal OES
GOVERNOR'S OFFICE
OF EMERGENCY SERVICES

M E M O R A N D U M

Date: October 26, 2015

To: Lorina Pisi, Real Property Analyst A-45
Technical Services, Lands Unit
Department of Forestry and Fire Protection
1300 U Street
Sacramento, CA 95814

From: Cheryl D. Soto, Telecommunications Systems Manager I (Supervisor)
Public Safety Communications

Subject: CDF Radio Vault Space Application (TD-312) Modification
County of Monterey - L-0058
Calandra Lookout, Monterey County
CDF-VLT LCDF001154

A technical analysis of the attached TD-312, California Department of Forestry and Fire Protection (CDF) Radio Vault Space Application for the County of Monterey has been completed. The County of Monterey is requesting to replace and consolidate VHF equipment in racks 11 and 12 with 700 MHz and 800 MHz, add a UHF link, VHF channel and a UPS at the Calandra Lookout.

The County of Monterey will operate on the following frequencies:

Transmit Frequency		Receive Frequency	
770.11875 MHz	(new)	800.11875 MHz	(new)
771.13125 MHz	(new)	801.13125 MHz	(new)
771.83125 MHz	(new)	801.83125 MHz	(new)
773.68125 MHz	(new)	803.68125 MHz	(new)
859.9625 MHz	(new)	814.9625 MHz	(new)
857.5125 MHz	(new)	812.5125 MHz	(new)
155.0400 MHz	(new)	156.1050 MHz	(new)
453.100 MHz	(new)	458.100 MHz	(new)
154.025 MHz	(existing)	159.090 MHz	(existing)
155.625 MHz	(existing)	158.850 MHz	(existing)
152.240 MHz	(existing)	N/A	
150.995 MHz	(existing)	155.295 MHz	(existing)
463.100 MHz	(existing)	468.100 MHz	(existing)
166.075 MHz	(existing)	171.025 MHz	(existing)
6625 MHz	(existing)	6725 MHz	(existing)

Application Sheets are used to gather the appropriate administrative information to process the TD-312. These sheets must be completed, signed and accompanied with the Technical Data Sheets.

Applicant: **County of Monterey**
(organization name)
1322 Natividad Road
(address)
Salinas, CA., 93906
(city, state, zip)
(831) 769-8880
(telephone number)
HarryW1@co.monterey.ca.us
(email address)

In accordance with the attached Technical Data Sheet(s), application is hereby made to:

☐ Establish New Lease

☒ Modify/Amend Lease (describe specific changes):
(attach additional sheet if more space is required)

Replace/consolidate VHF Multicast equipment in Rack 11 and 12 with 700 Mhz Multicast (to occupy only Rack 12). Backfill Rack 11 with new County MST 800Mhz. Install UPS near existing State battery bank. Add UHF link and single VHF analog channel.

☐ Renew lease with modification as stated:
(attach additional sheet if more space is required)

_____

☐ Renew lease (no changes, technical sheets must be completed)

☐ Lease _____ square feet

For vault space and related antenna space at **Calandra Lookout Monterey County**
(site name)

Power requirements for operations of communications equipment are:

☒ Commercial and emergency power
☐ Commercial power only
☐ No power required.

NOTE: Some radio vault facilities provide commercial and emergency power to each rack space without exception, and the tenant will be charged accordingly.

TECHNICAL DATA SHEETS

Data submitted on the Technical Data Sheets is used by the PSCO engineers to perform a study to determine the impact of the application on the existing users at the site. Please complete these sheets in its entirety and provide required information. Existing tenants must reflect the tenants installed equipment and equipment changes (new installations, removals, etc.).

Site Name: **Calandra Lookout** Date: **September 11, 2015**
County: **Monterey**

The following technical data is submitted in conjunction with a request for vault space.

If this is a land lease application for Cellular, applicant must provide plot plans, construction drawings and a written description of proposed land use.

Person responsible for technical operation of this station (person who can provide technical details):

Steven Paxton, Radio Communications Manager (ITD)
(name)
855 E. Laurel Drive Building D
(address)
Salinas, CA., 93905
(city, state, zip)
(831) 796-1463
(telephone number)

Date equipment desired to be in operation: **12/28/2015**
(It should be noted that, due to engineering priorities, this application may require up to one (1) full year to process.)

Equipment is to operate in the **Part 90** Radio Service.
FCC callsign of this installation: **WPLX890 (800MHz), TBD in APCO (700MHz), TBD (Single VHF Analog Fire Channel), WQTS557 (UHF Link)**. (Include a copy of the FCC license)

Type of operation: ☐ Base Station ☒ Mobile Relay ☐ Microwave Station
☐ Other

Amount of rack space required to house equipment (in inches):

Existing Monterey County Racks #11,12,13,14 (half rack 25 RUs),21, and NEW UPS (50"Hx24"Wx28.4"D) near existing State battery bank

(**NOTE:** Unless otherwise authorized, all electronic equipment is to be mounted in 7'6" aluminum open-frame relay racks and fastened to the site's earthquake bracing and cable ladder system. One rack occupies 2' by 2' of floor space.)

Additional space desired to mount cavities, duplexers, batteries, etc.:166.
☐ Wall Space ☐ Floor Space (HxWxD, inches)
☐ Rack Space ☒ Additional space not required

Space for battery facilities required, if any, including charger:
☐ Wall Space ☒ Floor Space **50"Hx24"Wx28.4"D for UPS** (HxWxD, inches)
☐ Radio Rack ☐ Not required

Maximum power consumption: TRANSMIT: **3,013 (proposed equipment)** Watts RECEIVE: _____ Watts at

Voltage: ☒ 110 Volts AC ☐ 12 volts DC ☐ 48 volts DC

EQUIPMENT DATA

New Tenant: Provide data for each piece of equipment to be installed in each vault space and identify as **New (N).**

Existing Tenant: Provide data for each piece of equipment currently installed and identify as **Existing (E).** If adding or removing equipment; identify the appropriate action **New (N), Removing (R).**

FREQUENCY INFORMATION: CELLULAR APPLICANTS MUST PROVIDE SPECIFIC CHANNELS TO BE USED (NOT THE BAND). IF SPECIFIC FREQUENCIES HAVE NOT BEEN PROVIDED THE APPLICATION WILL BE RETURNED.

Be sure to include a system block diagram on the page furnished for that purpose. Duplicate this page as required to show all equipment desired to be installed:

TRANSMITTER #1 **Power output 500 W**

Frequency(s) **770.11875**		**Existing (E) Removing (R) New (N)**
Make and Model: 700 MHz)	**Harris Master V Chan 1 700MHz system** (MODIFIED FROM VHF TO	(N)

RECEIVER #1

Frequency(s) **800.11875**		**Existing (E) Removing (R) New (N)**
Make and Model: 700 MHz)	**Harris Master V Chan 1 700MHz system** (MODIFIED FROM VHF TO	(N)

TRANSMITTER #2 **Power output 500 W**

Frequency(s) **771.13125**		**Existing (E) Removing (R) New (N)**
Make and Model: 700 MHz)	**Harris Master V Chan 2 700MHz system** (MODIFIED FROM VHF TO	(N)

RECEIVER #2

Frequency(s) **801.13125**		**Existing (E) Removing (R) New (N)**
Make and Model: 700 MHz)	**Harris Master V Chan 2 700MHz system** (MODIFIED FROM VHF TO	(N)

TRANSMITTER #3 **Power output 500 W**

Frequency(s) **771.83125**		**Existing (E) Removing (R) New (N)**
Make and Model: 700 MHz)	**Harris Master V Chan 3 700MHz system** (MODIFIED FROM VHF TO	(N)

RECEIVER #3

Frequency(s) **801.83125**		**Existing (E) Removing (R) New (N)**
Make and Model: 700 MHz)	**Harris Master V Chan 3 700MHz system** (MODIFIED FROM VHF TO	(N)

TRANSMITTER #4 **Power output 500 W**

Frequency(s) **773.68125**		**Existing (E) Removing (R) New (N)**
Make and Model: 700 MHz)	**Harris Master V Chan 4 700MHz system** (MODIFIED FROM VHF TO	(N)

RECEIVER #9

Frequency(s) 159.090		Existing (E) Removing (R) New (N)
Make and Model:	Harris Master III Analog Law Overlay	(E)

TRANSMITTER #10 Power output 100 W

Frequency(s) 155.625		Existing (E) Removing (R) New (N)
Make and Model:	Harris Master III Analog Fire Overlay	(E)

RECEIVER #10

Frequency(s) 158.850		Existing (E) Removing (R) New (N)
Make and Model:	Harris Master III Analog Fire Overlay	(E)

TRANSMITTER #11 Power output 100 W

Frequency(s) 152.240 (Transmit Only)		Existing (E) Removing (R) New (N)
Make and Model:	Harris Master III Analog Fire Paging Overlay	(E)

RECEIVER #11

Frequency(s) N/A		Existing (E) Removing (R) New (N)
Make and Model:	Harris Master III Analog Fire Paging Overlay	(E)

TRANSMITTER #12 Power output 100 W

Frequency(s) 150.995		Existing (E) Removing (R) New (N)
Make and Model:	Motorola Quantar Public Works	(E)

RECEIVER #12

Frequency(s) 155.295		Existing (E) Removing (R) New (N)
Make and Model:	Motorol Quantar Public Works	(E)

TRANSMITTER #13 Power output 100 W

Frequency(s) 463.100		Existing (E) Removing (R) New (N)
Make and Model:	Motorola Quantar Med-5 Channel	(E)

RECEIVER #13

Frequency(s) 468.100		Existing (E) Removing (R) New (N)
Make and Model:	Motorol Quantar Med-5 Channel	(E)

ANTENNA DATA

New Tenant: Provide data for each antenna to be installed at this vault facility and identify as **New (N).**

Existing Tenant: Provide data for each antenna currently installed and identify as **Existing (E).** If adding or removing an antenna; identify the appropriate action **New (N), Removing (R).**

Antenna number	Make and Model	Length or M/W dish size	Gain (dBd) (dBi for M/W)	Azimuth (relative to true north)	*Height desired (feet)	Existing (E) Removing (R) New (N)
42	Andrew UHP6-59WB (Position 65-1)	6'	39.3dBi	339.163	65.0'	(E)
41	Andrew PAR6-65B (Position 30-1)	6'	38.8dBi	339.163	30.0'	(E)
43	Sinclair SD235-HF2PALDF (DO2) (Position 40-3.5)	17'	5.5dBd	360	40.0'	(E)
10	Celwave AP881208 (Position 100-1)	24"	7.5dBd	330	100.0'	(R)
12	Celwave AP881208 (Position 100-2)	24"	7.5dBd	330	100.0'	(R)
13	Celwave AP881208 (Position 100-3)	24"	7.5dBd	330	100.0'	(R)
14	Sinclair SRL310C8 (Position 100-4)	10'	11dBd	330	100.0'	(E)
16	DBSpectra DS1F06F36U-D (Position 80-4)	22'	6dBd	360	80'	(R)
44	DBSpectra DS1F06F36U-D (Position 40-4)	22'	6dBd	360	40'	(R)
16	DBSpectra DS7E12F36U-D (Position 80-4)	24'	12dBd	360	80'	(N)
44	Andrew DB810E-PS (Replaces Antenna #44 at different mount height) (Position 18-4)	14.7'	12dBd	360	18'	(N)
13	Telewave ANT850F6 (Replaces Antenna #12 at same height) (Position 100-3)	4.7'	6dBd	360	100'	(N)
~~45~~ 12	Telewave ANT850F6 (Position 20-3)	4.7"	6dBd	360	20'	(N)

* For VHF antennas, show desired height to base of antenna support. For microwave dishes, show desired height to center of radiating element.

SYSTEM BLOCK DIAGRAM:

Please provide a block diagram of the proposed installation at this radio vault facility. Be sure to include all elements of the system, including transmitters, receivers, power sources, antennas, protective devices, telephone lines, multiplex circuits, etc. Use additional sheets if necessary. Refer to the attached example if desired. Please be sure to label the operating frequency of each piece of equipment in the system, as appropriate.

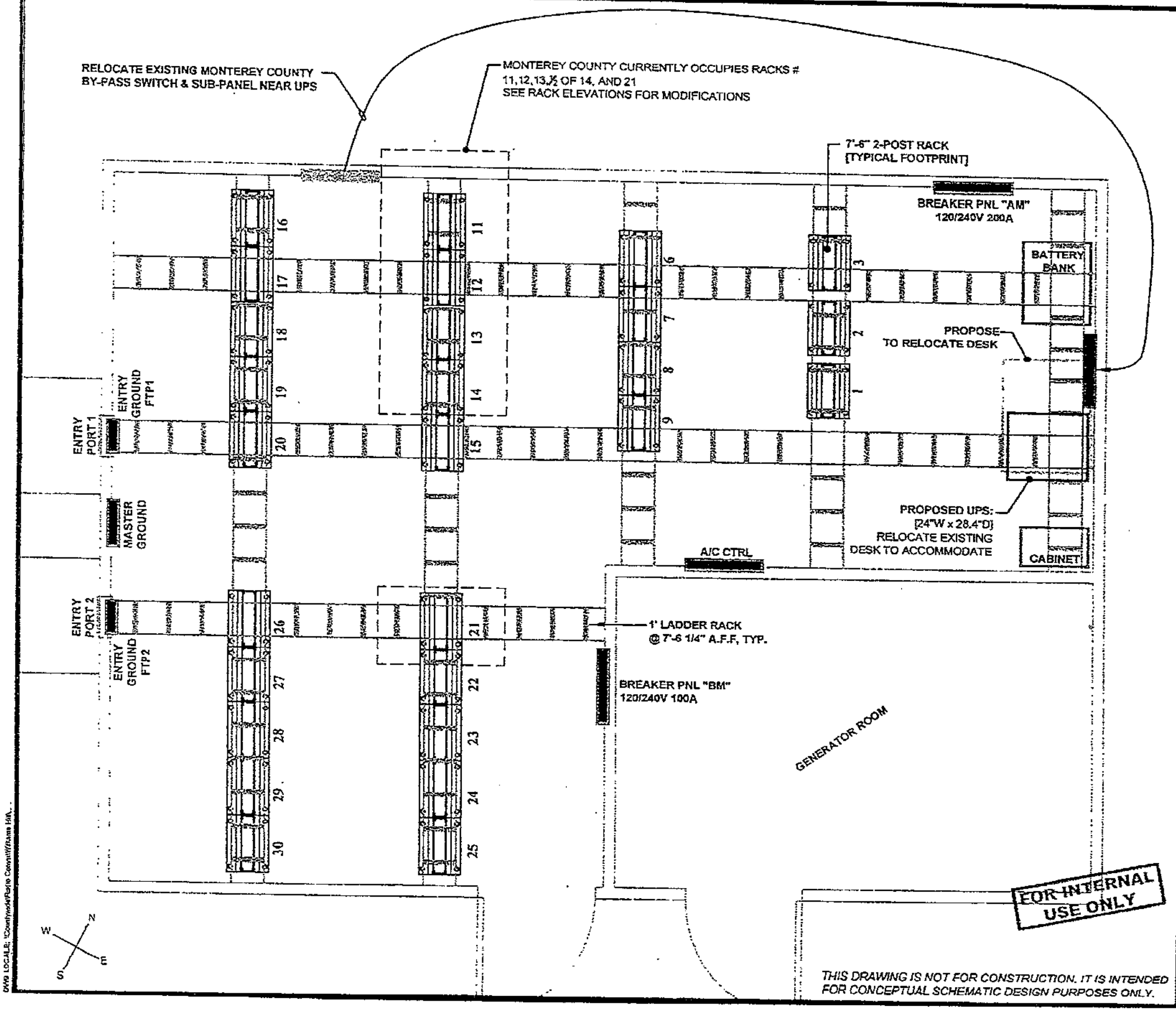

THIS DRAWING IS NOT FOR CONSTRUCTION. IT IS INTENDED FOR CONCEPTUAL SCHEMATIC DESIGN PURPOSES ONLY.

MONTEREY COUNTY CALIFORNIA - 1850 -

INFORMATION TECHNOLOGY
COMMUNICATIONS ENGINEERING
1590 MOFFETT STREET
SALINAS, CA 93905
P: (831) 796-6433
F: (831) 759-6910

DWG. No.:	09-R-WLMS-NGEN DGTL TD312_2
DRAWN BY:	T. MONTOYA
CHECKED BY:	S. PAXTON
TYPE:	TD312 DOCS
SCALE:	8½ x 11 1/4" : 1'-0"

REV.	DATE	DESCRIPTION
-	4/24/12	ISSUE FOR SUBMITTAL
1	10/12/12	ADDED FREQ. TO DIGITAL
2	6/15/15	CHANGED MULTICAST SYSTEM FROM VHF TO 700MHz MULTICAST

PROJECT TITLE

NGEN DIGITAL SYSTEM IMPLEMENTATION AT WILLIAMS HILL

PROJECT SITE

WILLIAMS HILL
[CALANDRA]
20 MILE SOUTH-EAST
OF KING CITY, CA
MONTEREY COUNTY

SHEET TITLE

PROPOSED FLOOR PLAN

SHEET NUMBER

T-2

DWG LOCALE: \County\Radio Comm\Williams Hill...

PROPOSED MONTEREY COUNTY RACK ELEVATIONS AT WILLIAMS HILL

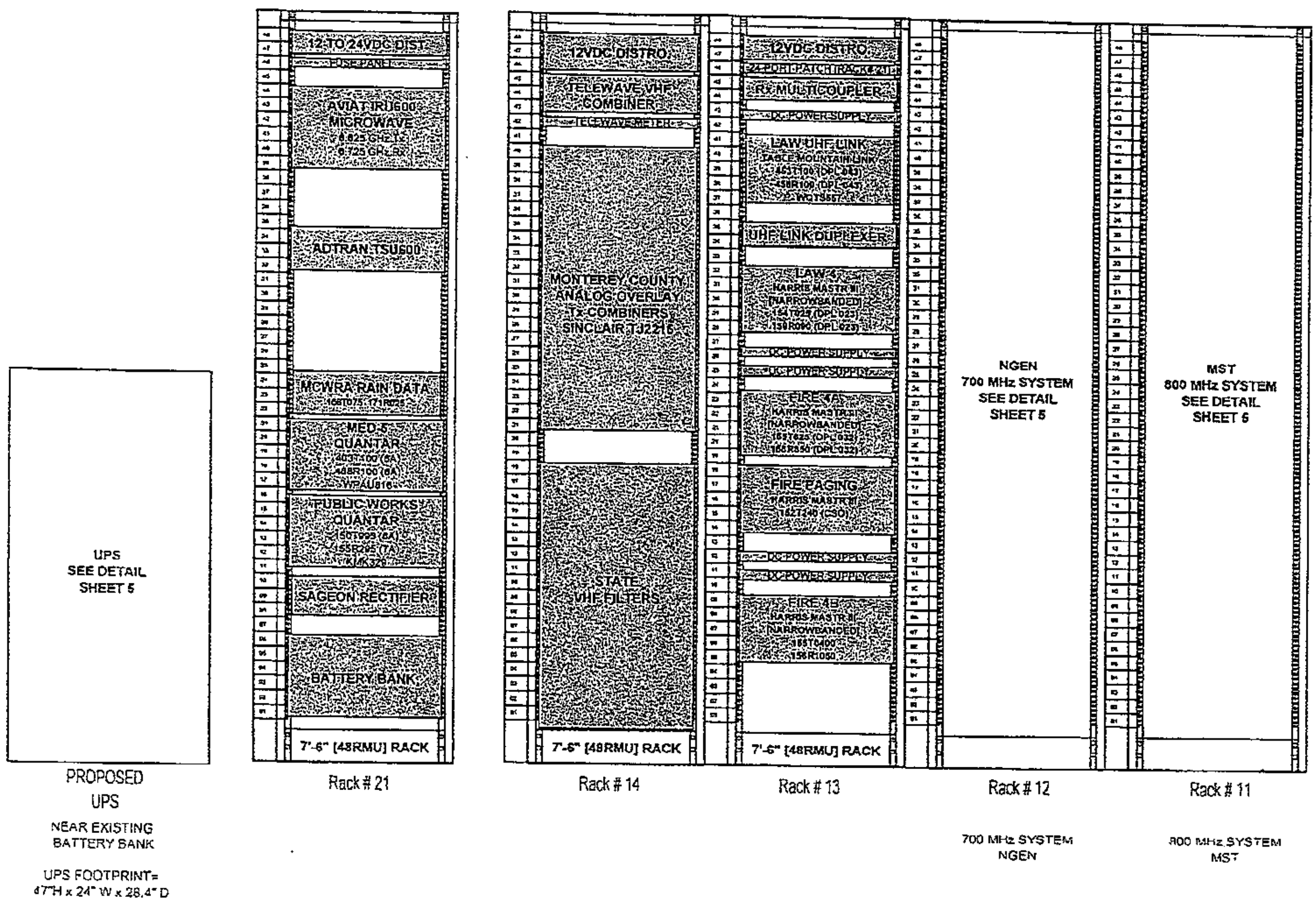

FOR INTERNAL USE ONLY

THIS DRAWING IS NOT FOR CONSTRUCTION. IT IS INTENDED FOR CONCEPTUAL SCHEMATIC DESIGN PURPOSES ONLY

MONTEREY COUNTY CALIFORNIA · 1850 ·

INFORMATION TECHNOLOGY
COMMUNICATIONS ENGINEERING
1590 MOFFETT STREET
SALINAS, CA 93905
P: (831) 796-6433
F: (831) 759-6910

DWG No.: 00-R-WILLIAMS-NGEN DGTL TD312_2
DRAWN BY: T. MONTOYA
CHECKED BY: S. PAXTON
TYPE: TD312 DOCS
SCALE: 8½ x 11 NO SCALE

REV.	DATE	DESCRIPTION
-	4/24/12	ISSUE FOR SUBMITTAL
1	10/12/12	ADDED FREQ. TO DIGITAL
2	9/15/15	CHANGED MULTICAST SYSTEM FROM VHF TO 700MHz MULTICAST

PROJECT TITLE
NGEN DIGITAL SYSTEM IMPLEMENTATION AT WILLIAMS HILL

PROJECT SITE
WILLIAMS HILL [CALANDRA]
20 MILE SOUTH-EAST OF KING CITY, CA
MONTEREY COUNTY

SHEET TITLE
PROPOSED COUNTY RACK ELEVATIONS

SHEET NUMBER
T-4

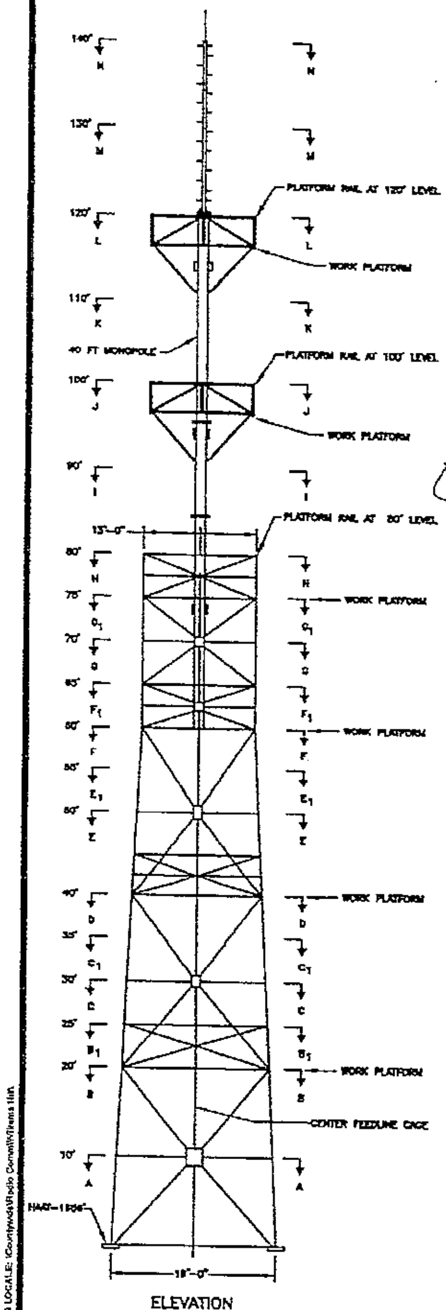

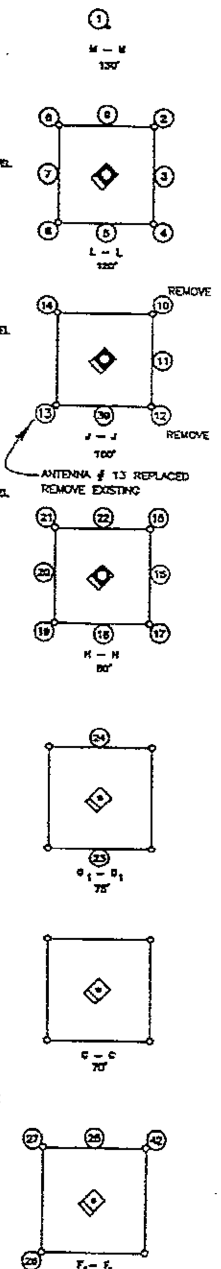

Antenna #	Make and Model	Length or M/W dish size	Gain (dBd) (dBi for M/W)	Azimuth (relative to true north)	*Height desired (feet)	Existing (E) Removing (R) New (N)	Description
42	Andrew UHP6-59WB (Position 65-1)	6'	39.3dBi	339.163	65.0'	(E)	MICROWAVE TO KC
41	Andrew PAR6-65B (Position 30-1)	6'	38.8dBi	339.163	30.0'	(E)	MICROWAVE TO KC
43	Sinclair SD235-HF2PALDF (DO2) (Position 40-3.5)	17'	5.5dBd	360	40.0'	(E)	OVERLAY Tx
10	~~Celwave AP881208 (Position 100-1)~~	~~24'~~	~~7.5dBd~~	~~330~~	~~100.0~~	(R)	~~800MHz MDT~~
12	~~Celwave AP881208 (Position 100-2)~~	~~24'~~	~~7.5dBd~~	~~330~~	~~100.0'~~	(R)	~~800MHz MDT~~
13	~~Celwave AP881208 (Position 100-3)~~	~~24'~~	~~7.5dBd~~	~~330~~	~~100.0'~~	(R)	~~800MHz MDT~~
14	Sinclair SRL310C8 (Position 100-4)	10'	11dBd	330	100.0'	(E)	MED-CHNL
16	~~DBSpectra DS1F06F36U-D (Position 80-1)~~	~~22'~~	~~6dBd~~	~~360~~ 281	~~80'~~	(R)	~~VHF MULTICST~~ 201
44	~~DBSpectra DS1F06F36U-D (Position 40-1)~~	~~22'~~	~~6dBd~~	~~360~~	~~40'~~	(R)	~~VHF MULTICST~~
16	DBSpectra DS7E12F36U-D (Position 80-4)	24'	12dBd	360	80'	(N)	PROPOSED Rx 700MHz NGEN
44	Andrew DB810E-PS (Replaces Antenna #44 at different mount height) (Position 18-4)	14.7'	12dBd	360	18'	(N)	PROPOSED Tx 700MHz NGEN
13	Telewave ANT850F6 (Replaces Antenna #13 at same height) (Position 100-3)	4.7'	6dBd	360	100'	(N)	PROPOSED Rx 800MHz MST
45	Telewave ANT850F6 (Position 20-3)	4.7'	6dBd	360	20'	(N)	PROPOSED Tx 800MHz MST

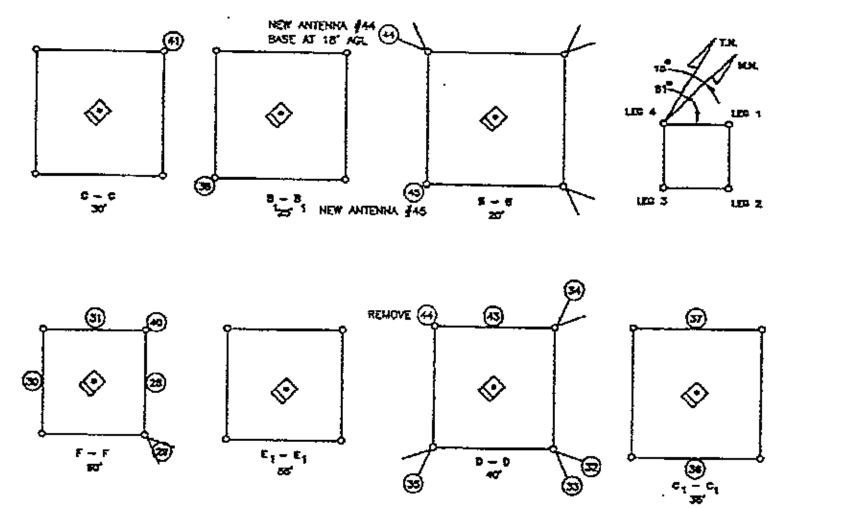

MONTEREY COUNTY CALIFORNIA · 1850 ·

INFORMATION TECHNOLOGY
COMMUNICATIONS ENGINEERING
1590 MOFFETT STREET
SALINAS, CA 93905
P: (831) 796-6433
F: (831) 759-0910

DWG No.:	00-RAWLINS-NGEN DGTL TO312_2
DRAWN BY:	T. MONTOYA
CHECKED BY:	S. PAXTON
TYPE:	TO312 DOCS
SCALE:	8½ x 11 NO SCALE

REV.	DATE	DESCRIPTION
-	4/24/12	ISSUE FOR SUBMITTAL
1	10/12/12	ADDED FREQ. TO DIGITAL
2	8/15/15	CHANGED MULTICAST SYSTEM FROM VHF TO 700MHz MULTICAST

PROJECT TITLE

NGEN DIGITAL SYSTEM IMPLEMENTATION. AT WILLIAMS HILL

FOR INTERNAL USE ONLY

PROJECT SITE

WILLIAMS HILL
[CALANDRA]
20 MILE SOUTH-EAST OF KING CITY, CA
MONTEREY COUNTY

SHEET TITLE

PROPOSED TOWER ELEVATIONS

SHEET NUMBER

T-6

FOR INTERNAL USE ONLY

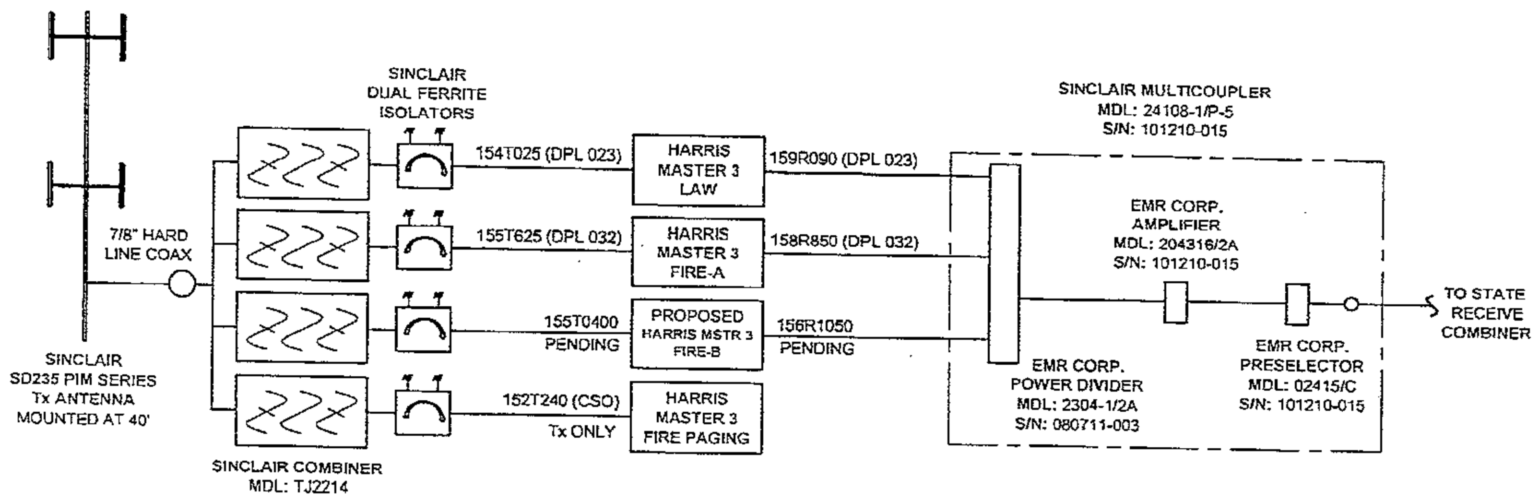

ALL EQUIPMENT SHOWN
HERE IN RACK #13

THIS DRAWING IS NOT FOR CONSTRUCTION. IT IS INTENDED FOR CONCEPTUAL SCHEMATIC DESIGN PURPOSES ONLY

INFORMATION TECHNOLOGY
COMMUNICATIONS ENGINEERING
1590 MOFFETT STREET
SALINAS, CA 93905
P: (831) 796-6433
F: (831) 759-6910

DWG No.:	00-R-WLMS-NGEN DGTL TD312_2
DRAWN BY:	T. MONTOYA
CHECKED BY:	S. PAXTON
TYPE:	TD312 DOCS
SCALE:	8½ x 11 NO SCALE

REV.	DATE	DESCRIPTION
-	4/24/12	ISSUE FOR SUBMITTAL
1	10/12/12	ADDED FREQ. TO DIGITAL
2	0/15/15	CHANGED MULTICAST SYSTEM FROM VHF TO 700MHz MULTICAST

PROJECT TITLE

NGEN DIGITAL SYSTEM IMPLEMENTATION AT WILLIAMS HILL

PROJECT SITE

WILLIAMS HILL
[CALANDRA]
20 MILE SOUTH-EAST
OF KING CITY, CA
MONTEREY COUNTY

SHEET TITLE

ANALOG OVERLAY SYSTEM MODIFICATIONS

SHEET NUMBER

T-8

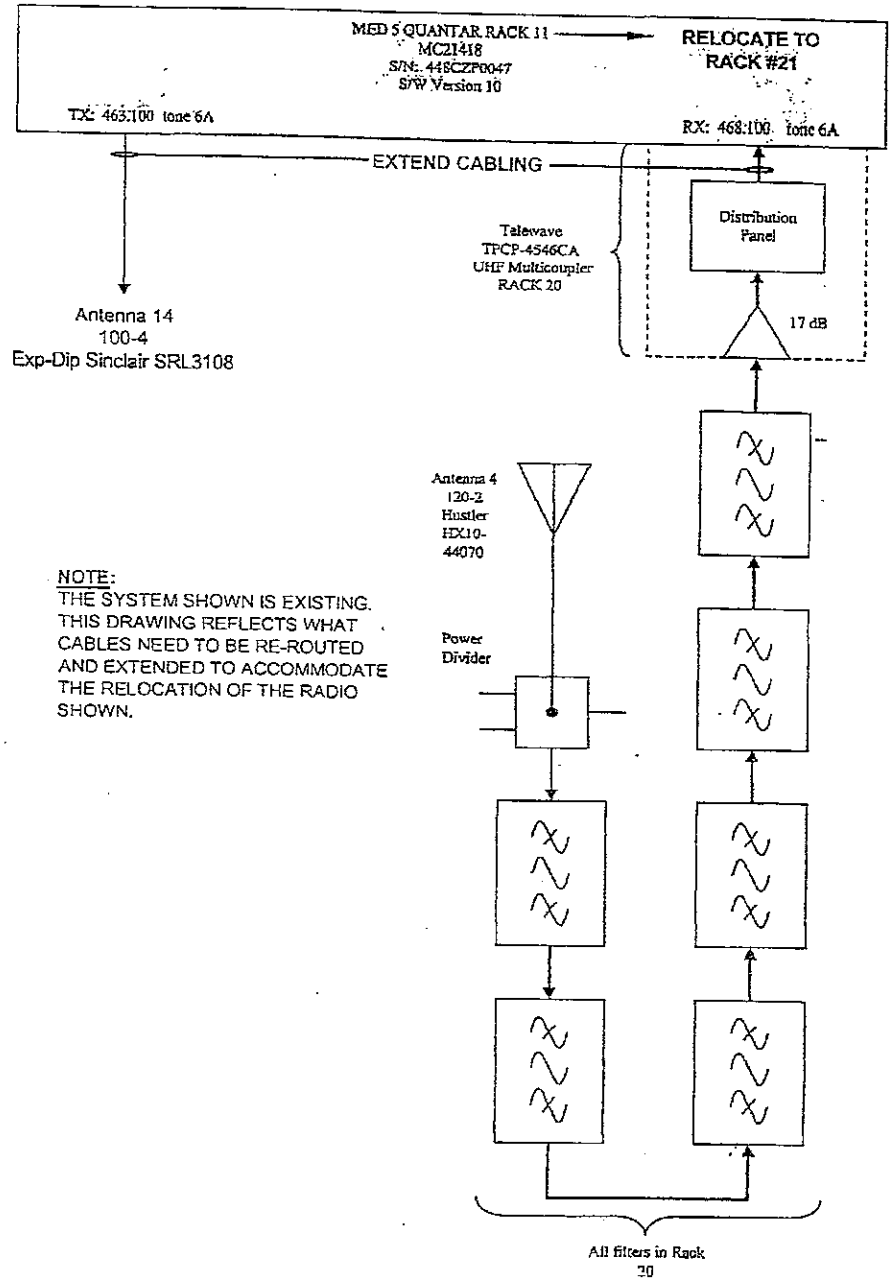

NOTE:
THE SYSTEM SHOWN IS EXISTING.
THIS DRAWING REFLECTS WHAT CABLES NEED TO BE RE-ROUTED AND EXTENDED TO ACCOMMODATE THE RELOCATION OF THE RADIO SHOWN.

THIS DRAWING IS NOT FOR CONSTRUCTION. IT IS INTENDED FOR CONCEPTUAL SCHEMATIC DESIGN PURPOSES ONLY.

FOR INTERNAL USE ONLY

MONTEREY COUNTY CALIFORNIA 1850

INFORMATION TECHNOLOGY
COMMUNICATIONS ENGINEERING
1590 MOFFETT STREET
SALINAS, CA 93905
P. (831) 755-5433
F. (831) 759-6010

DWG No.:	00-R-WLMS-NGEN DGTL TD312_2
DRAWN BY:	T. MONTOYA
CHECKED BY:	S. PAXTON
TYPE:	TD312 DOCS
SCALE:	8 x 11 NO SCALE

REV.	DATE	DESCRIPTION
-	4/24/12	ISSUE FOR SUBMITTAL
1	10/12/12	ADDED FREQ. TO DIGITAL
2	5/23/15	CHANGED MULTICAST SYSTEM FROM VHF TO 700MHz MULTICAST

PROJECT TITLE

NGEN DIGITAL SYSTEM IMPLEMENTATION AT WILLIAMS HILL

PROJECT SITE

WILLIAMS HILL
[CALANDRA]
20 MILE SOUTH-EAST OF KING CITY, CA
MONTEREY COUNTY

SHEET TITLE

CABLING EXTENSION
EXISTING EQUIPMENT
MED-5

SHEET NUMBER

T-10

DWG LOCALE: \Countywide\Radio Comm\Williams Hill\...

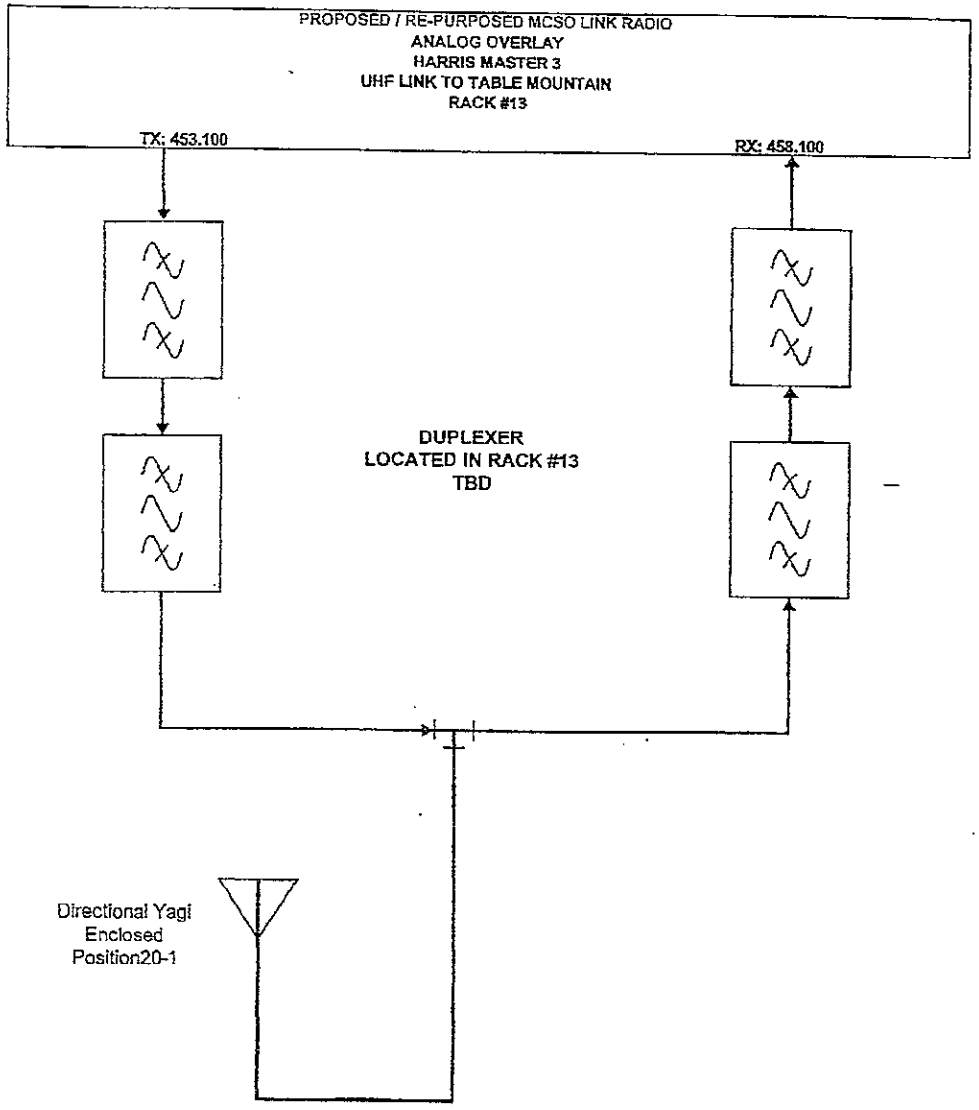

THIS DRAWING IS NOT FOR CONSTRUCTION. IT IS INTENDED FOR CONCEPTUAL SCHEMATIC DESIGN PURPOSES ONLY.

FOR INTERNAL USE ONLY

MONTEREY COUNTY CALIFORNIA 1850

INFORMATION TECHNOLOGY
COMMUNICATIONS ENGINEERING
1590 MOFFETT STREET
SALINAS, CA 93905
P (831) 755-0435
F (831) 759-6910

DWG No.:	00-R-HYLMS-NGEN DGTL TD312_2
DRAWN BY:	T. MONTOYA
CHECKED BY:	S. PAXTON
TYPE:	TD312 DOCS
SCALE:	8½ x 11 NO SCALE

REV.	DATE	DESCRIPTION
-	4/24/12	ISSUE FOR SUBMITTAL
1	10/12/12	ADDED FREQ. TO DIGITAL
2	4/23/15	CHANGED MULTICAST SYSTEM FROM VHF TO 700MHz MULTICAST

PROJECT TITLE

NGEN DIGITAL SYSTEM IMPLEMENTATION AT WILLIAMS HILL

PROJECT SITE

WILLIAMS HILL [CALANDRA]
20 MILE SOUTH-EAST OF KING CITY, CA
MONTEREY COUNTY

SHEET TITLE

PROPOSED UHF LINK TO TABLE MOUNTAIN

SHEET NUMBER

T-12

DWG LOCALE: K:\countywide\Radio Comm\Williams Hill...

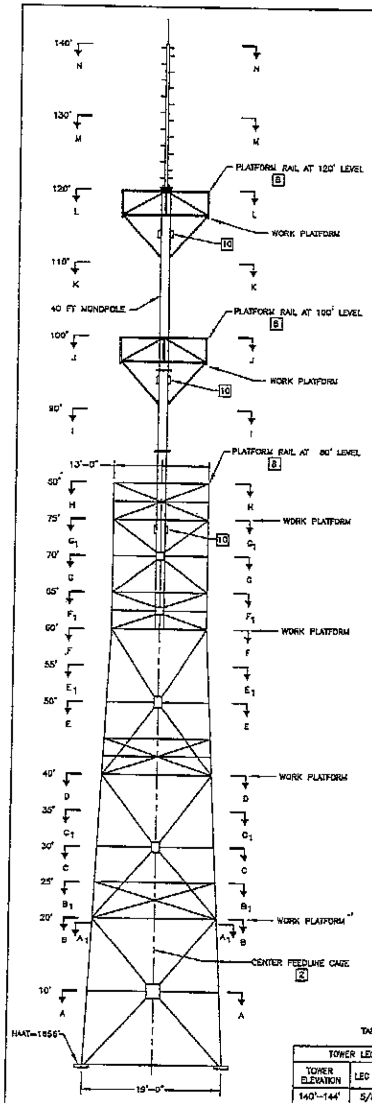

ELEVATION

NOTE 6 7

TOWER MAKE: CUSTOM 80' 156 M820 WITH CUSTOM 40' NESTED MONOPOLE

TOWER MFG: MICROFLECT

TABLE 3

TOWER LEG DIMENSIONS	
TOWER ELEVATION	LEG OUTSIDE DIAMETER
140'-144'	5/8" LIGHTNING ROD
120'-140'	4 1/2"
95'-120'	15"
80'-95'	20"
60'-80'	4 1/2"
40'-60'	5 9/16"
20'-40'	8 5/8"
0'-20'	8 5/8"

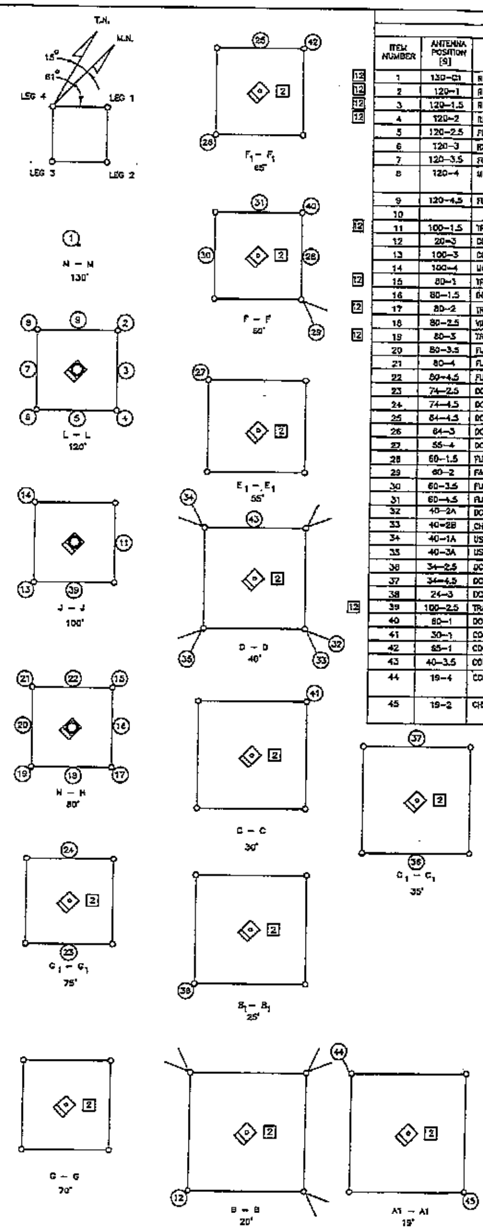

TABLE 1 NOTE 3

CALANDRA L.O. (CDF) AS-INSTALLED ANTENNAS AND FEEDLINES

ITEM NUMBER	ANTENNA POSITION [9]	AGENCY	TX (MHz)	RX (MHz)	TYPE	MANUFACTURER	MODEL	VERTICAL DIMENSION (FEET)/ SUPPORT DIAMETER (INCHES)	ABOVE SUPPORT FT	BELOW SUPPORT FT	AZIMUTH (TN) DEGREES	YEAR INST.	FTP PORT	FEEDLINE (ANDREW)	DESCRIPTION AND NOTES
1	130-C1	RECEIVE COMBINER		42.18-47.18	OMNI	SINCLAIR	SRL-110A	15/1.5/1.5	8	8		2001	1-1A	LDF4-50A	
2	120-1	RECEIVE COMBINER		150-164	OMNI	DECIBEL	DB816AB	19/2.75	19			2001	1-1B	LDF5-50A	
3	120-1.5	RECEIVE COMBINER		160-174	OMNI	DECIBEL	DB816BC	19/2.75	19				1-2A	LDF5-50A	
4	120-2	RECEIVE COMBINER		445/.../470	OMNI	HUSTLER	HX10-44070	18/3	18				1-2B	LDF5-50A	
5	120-2.5	FUTURE											1-3A	LDF5-50A	
6	120-3	RECEIVE COMBINER		806-869	OMNI	DECIBEL	DB809K-XT	12.2'/2.5"	10'	OMNI			1-3B	LDF6-50A	
7	120-3.5	FUTURE											1-4A	LDF5-50A	
8	120-4	MONTEREY COUNTY	RX ONLY	154.845,156.195, 158.865,159.015	OMNI	BB SPECTRA	DSIF0AF360-D	21"	21	0		2013	-	-	MULTI-COUPLED RX
9	120-4.5	FUTURE										2001	1-5A	LDF5-50A	
10															
11	100-1.5	TRANSMIT COMBINER	824-896		OMNI	DECIBEL	DB809K-XC	12.2'/2.5"	10'	OMNI		2001	1-6B	LDF5-50A	
12	20-3	COUNTY OF MONTEREY	806-896	.	OMNI	TELEWAVE	ANT850F6	4.7'	4.7'	0	.	2015		.	MONTEREY 800 TX
13	100-3	COUNTY OF MONTEREY	.	806-896	OMNI	TELEWAVE	ANT850F6	4.7'	4.7'	0	.	2015		.	MONTEREY 800 RX
14	100-4	MONTEREY COUNTY EMS	483.100		EXP-DIP	SINCLAIR	SRL310CB	10/2.375	10		330	2001	1-7	LDF5-50A	EXPOSED DIPOLE
15	80-1	TRANSMIT COMBINER	150-164		OMNI	DECIBEL	DB516-AB	19/2.75	19			2001	1-2A	LDF6-50A	
16	80-1.5	DOT	453.5625	458.5625	YAGI	TELEWAVE	ANT450-410-WR	1.4/3.5	0.5	0.5	211	2014	1-5B	LDF5-50A	LINK FOR KCY RR3, RR4
17	80-2	TRANSMIT COMBINER	150-164		OMNI	DECIBEL	DB816-AB	19/2.75	19			2001	1-9A	LDF5-50A	
18	80-2.5	VIP/AMATEUR	146.730		OMNI	DECIBEL	DB816-B	19/2.75	19				1-9B	LDF5-50A	
19	80-3	TRANSMIT COMBINER	160-174		OMNI	DECIBEL	DB816-BC	19/2.75	19				1-10A	LDF5-50A	
20	80-3.5	FUTURE											1-10B	LDF5-50A	
21	80-4	FUTURE											1-11A	LDF5-50A	
22	80-4.5	FUTURE											1-11B	LDF5-50A	
23	74-2.5	DCM	6556.0	6725.0	PARA	ANDREW	PL8-65	8/4.5	4	4	152.5		2-16B	EW63	MT. LOWE MAIN
24	74-4.5	DCM	6856.0	6685.0	PARA	ANDREW	PL10-65	10/4.5	5	5	330.4		2-14A	EW63	EASTSIDE MAIN
25	64-4.5	DCM	10582.5	10647.5	PARA	ANDREW	P4-105	4/4.5	2	2	337.6		2-17A	EW90	KING CITY
26	64-3	DCM	6595.0	6765.0	PARA	ANDREW	PL8-65	8/4.5	4	4	168.7		2-13A	EW63	ROCKY BUTTE MAIN
27	55-4	DCM	957.15	953.55	PARA	ANDREW	P10F-9	10/4.5	4	4	283.9		2-17B	LDF5-50A	ANDERSON PEAK
28	60-1.5	FUTURE											1-12A	LDF4-50A	
29	60-2	FAG	151.43		OMNI	TELEWAVE	ANT150F6-3	20/2.75	20					LDF5-50A	
30	60-3.5	FUTURE											1-13A	LDF4-50A	
31	60-4.5	FUTURE											1-13B	LDF4-50A	
32	40-2A	DOT	47.18		OMNI	KRECO	CO41A	10/2	10				1-14A	LDF4-50A	
33	40-2B	CHP (BLK & BLU)	42.46/44.92		OMNI	SINCLAIR	SD110	4/2	7	7		2011	1-14B	LDF4-50A	
34	40-1A	US-DOJ/INS	417.150	413.625	GRID	SCALA	PR-450U	6/2	3	3	333	2001	1-15A	LDF5-50A	
35	40-3A	US-DOJ/INS	166.875	166.875	YAGI	SCALA	CA5-150	4/2	2	2	124	2001	1-15B	LDF5-50A	VERTICALLY POLARIZED
36	34-2.5	DCM		6725.0	PARA	ANDREW	PL8-65	8/4.5	4	4	152.5	2001	2-16A	EW63	MT. LOWE DIVERSITY
37	34-4.5	DCM		6695.0	PARA	ANDREW	PL10-65	10/4.5	5	5	330.4	2001	2-14B	EW63	EASTSIDE DIVERSITY
38	24-3	DCM		6755.0	PARA	ANDREW	PL4-65	4/4.5	2	2	168.7	2001	2-13B	EW63	ROCKY BUTTE DIVERSITY
39	100-2.5	TRANSMIT COMBINER	440-470		OMNI	HUSTLER	HX10-44070	18/3	18			2001	1-16A	LDF5-50A	
40	80-1	DOT	453.7250	USE ANT. #4	YAGI	TELEWAVE	ANT450Y10-WR	1.4/3.5	0.5	0.5	9.4	2011		LDF5-50A	LINK FOR KCY RR1,RR2,RR4
41	30-1	COUNTY OF MONTEREY	RX ONLY	6765	DISH	ANDREW	UHP6-65B	6' DIA	3	3	339.1	2011		.	.
42	65-1	COUNTY OF MONTEREY	6625	6765	DISH	ANDREW	UHP6-59W	6' DIA	3	3	339.1	2011		.	.
43	40-3.5	COUNTY OF MONTEREY	152.24	.	OMNI	SINCLAIR	SD235	14'	14	0	.	2011		.	LINK FOR KCY RR1,RR2,RR4
44	19-4	COUNTY OF MONTEREY	155.43,155.31, 155.61,155.685	TX ONLY	OMNI	ANDREW	DB810E-PS	14.7'	14.7'	0	.	2015		.	COMBINED TX
45	19-2	CHP	453.0625 453.8875		YAGI	MAXRAD	BMOY4403	19'			92.14	2015	1-4A	LDF4-50A	SAN ARDO

NOTES:

*1. DRAWING CHANGES REQUIRE VAULT MANAGER'S APPROVAL.

2. REFER TO DRAWING 227481-001 FOR THE FOLLOWING DETAILS:
   - GROUNDING DETAILS ON THE TOWER
   - CLIMBING AND FEEDLINE LADDER DETAILS
   - FEEDLINE ROUTING ON THE TOWER PLATFORMS AND MONOPOLE

3. TABLE 1 LISTS ANTENNAS CURRENTLY INSTALLED ON THE TOWER. TABLE 2 LISTS THE DESIGN LOAD OF THE TOWER. AN ANTENNA THAT IS SUBSTITUTED FROM THE DESIGN ANTENNA MUST BE EQUAL TO OR LESS THAN THE DESIGN ANTENNA IN ITS WIND LOAD SURFACE AREA (SQ. FT.) AND ITS WEIGHT.

   TABLE 2 SHOWS SOME ANTENNA POSITIONS WITH MORE THAN ONE ANTENNA FOR TOWER LOADING DESIGN PURPOSES ONLY.

4. 4 1/2" O.D. MICROWAVE DISH MOUNTS AND AZIMUTH STRUT BRACE BRACKETS HAVE BEEN INSTALLED ON THE TOWER FOR ALL PRESENT AND FUTURE DISH LOCATIONS. NO MOUNTING PIPES ARE PROVIDED FOR DISHES ON THE NON-TAPERED SECTION OF THE TOWER. THESE DISHES CAN MOUNT DIRECTLY TO THE 4 1/2" O.D. NON-TAPEREDTOWER LEG.

5. THIS DISH IS INVERTED

6. THE MICROFLECT AS-BUILT DRAWINGS ARE AVAILABLE AS ELECTRONIC FILES ONLY IN THE TELECOMMUNICATIONS DIVISION DRAFTING SYSTEM. THEY CAN BE VIEWED AND PRINTED USING A VIEW BASE OR EQUIVALENT FILE VIEWING SOFTWARE. REFER TO ELECTRONIC DRAWING NUMBER 510030-001 FOR A COVERSHEET LISTING THE RASTER SCAN IMAGE NUMBERS WHICH CORRESPOND TO THE ACTUAL MICROFLECT TOWER DRAWING NUMBERS.

7. SPECIFIC TOWER INFORMATION IS AS FOLLOWS: THIS MICROFLECT TOWER, MODEL NUMBER 156-M820-80, HAS TOWER LEGS ON 19' CENTER AT THE BASE AND TAPER TO 13' WIDE AT 80'. THE 80' TO 80' TOWER SECTION IS NOT TAPERED. THE TOWER LATTICE SECTION (0' TO 80') HAS WORK PLATFORMS AT 20', 40', 60' AND 75'; THE 75' LEVEL IS 13' SQUARE. THE MONOPOLE TOWER SECTION EXTENDS FROM THE 75' LEVEL TO THE 120' LEVEL WITH TWO 12' SQUARE WORK PLATFORMS INSTALLED AT THE 100' AND 120' LEVELS. THE TOWER IS TOPPED WITH A 20' HIGH BY 4 1/2" DIAMETER ANTENNA MOUNT MAST.

8. THE WORK PLATFORMS ARE EQUIPPED WITH PERIMETER RAILS WITH 16 EACH 2 3/8" O.D. PIPE ANTENNA MOUNTS, 5 PER FACE INCLUDING CORNERS.

9. THE ANTENNA POSITIONS HAVE BEEN IDENTIFIED WITH POSITION NUMBERS BASED UPON TOWER ELEVATION. ANTENNA POSITION 90-2 FOR EXAMPLE, IS AT AN ELEVATION OF 90'. REFER TO SHEET 3.

10. FEEDLINES ROUTE UP THE MONOPOLE PIPE IN ONE OF TWO WAYS, UP THE OUTSIDE OR UP THE INSIDE. IT IS RECOMMENDED THAT ROUTING BE DONE UP THE INSIDE OF THE MONOPOLE, WHICH REDUCES TOWER WIND LOAD, UNLESS TECHNICAL REASONS REQUIRE OUTSIDE ROUTING. THE MONOPOLE PIPE IS EQUIPPED, ON THE OUTSIDE, WITH FEED LINE LADDER RUNGS ON 40" CENTERS. THE MONOPOLE PIPE IS ALSO EQUIPPED WITH FEED LINE ROUTING PORTS (HOLES) JUST BELOW EACH PLATFORM. HANGING HOOKS ARE INSTALLED INSIDE THE MONOPOLE PIPE, JUST INSIDE THE PORT, FOR FEED LINE SUSPENSION. FEEDLINES WHICH ROUTE UP THE INSIDE OF THE MONOPOLE CAN EXIT THROUGH THE ROUTING PORTS TO THE BOTTOM OF EACH PLATFORM ANTENNA MOUNT POSITION. THE FEEDLINES ARE SUSPENDED FROM HUBBELL BRAND KELLUM GRIPS; PN 024-01-014 FOR 1/2" FEEDLINES AND PN 024-01-17 FOR 7/8" FEEDLINES (FOR THE ZION AND LOMA PRIETA TOWERS, FEEDLINES ONLY ROUTE UP THE INSIDE OF THE MONOPOLE).

11. MICROWAVE DISHES LABELED "FUTURE" ARE INTENDED FOR ANY FUTURE TENANTS. DISH POSITIONS LABELED "DCM FUTURE" ARE RESERVED FOR STATE MICROWAVE SYSTEM USE. IF A NON-STATE TENANT REQUESTS TOWER SPACE AT A "DCM FUTURE" POSITION, DCM MAY, BUT IS NOT REQUIRED, TO RELINQUISH THE SPACE RESERVATION.

12. COMBINED ANTENNA SYSTEM, REFER TO DWG: 427050-203.

13. THE ACTUAL AS-BUILT TOWER HAS A VHF V-MOUNT INSTALLED AT THIS LOCATION. SHEET 2 OF THIS DRAWING SHOWS A DISH LOCATED IN THIS POSITION FOR TOWER DESIGN LOAD PURPOSES.

14. TABLE 4 IS A CONVERSION TABLE SHOWING DISH INSTALLATION VARIATIONS FROM THE TOWER DESIGN LOAD; VARIATIONS MAY BE IN ELEVATION, AZIMUTH, OR DISH SIZE.

REV	DATE	BY	DESCRIPTION	APPD
S	2-25-14	BK	REMOVE ANTENNAS #10, #12 AND #13 PER EMAIL 2-10-14 FROM CDF	CB
R	9-20-13	SF	FAC-CDM131401W013: ADDED FAG TX ANT #29, UPDATE SILD	MR
V	10-28-15	BK	ADDED MONTEREY CO ANTENNAS #12&13, MOVED ANT #44 AND CHANGED TYPE	RF
U	9-9-15	KM	CHP12020W002: ADD ANTENNA #45	JN
T	7-21-14	BK	000001W012: INSTALLED ANTENNA #16	JAK

TABLE OF CHANGES

CALANDRA L.O. (CDF)*

ANTENNA SPACE ASSIGNMENT (140 FOOT TOWER)

CALIFORNIA GOVERNOR'S OFFICE OF EMERGENCY SERVICES PUBLIC SAFETY COMMUNICATIONS

CAD FILE NUMBER 023556V1	
FL	MW
ARE	DATE 1-10-01
SCALE SHOWN	SHEET 1 OF 4
P D 427050-009	REV V

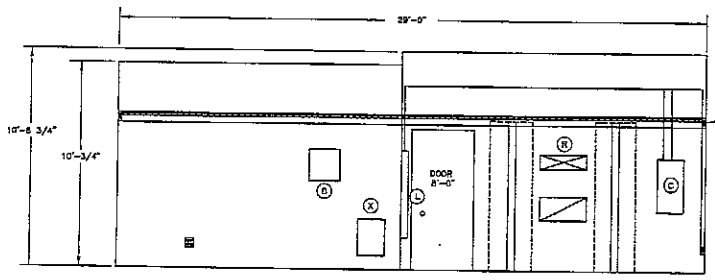

SECTION A-A

SOUTH WALL ELEVATION

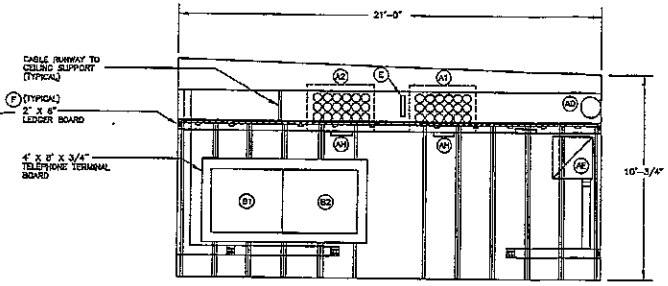

SECTION C-C

WEST WALL ELEVATION

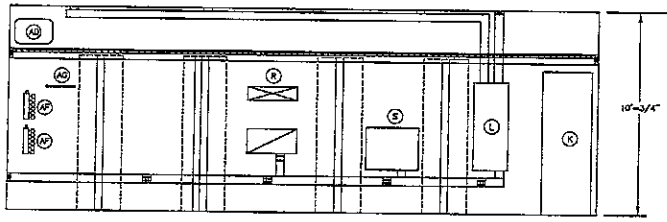

SECTION B-B

NORTH WALL ELEVATION

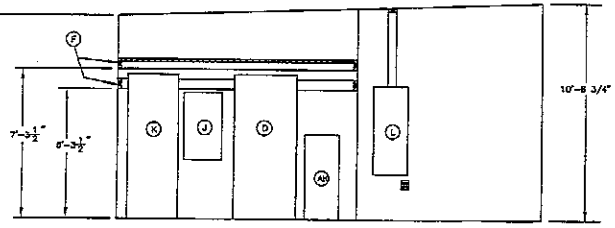

SECTION D-D

EAST WALL ELEVATION

0 5

SCALE IN FEET

SCALE: 3/8" = 1'-0"

REV	DATE	BY	DESCRIPTION	APPD

TABLE OF CHANGES

CALANDRA L.O. (CDF) *

VAULT LAYOUT
FLOOR PLAN

CALIFORNIA DEPARTMENT OF EMERGENCY SERVICES
PUBLIC SAFETY COMMUNICATIONS
601 SECRAMENTO, PORTER, 8100, SACRAMENTO, CA 95811-0557

OWNER JOB/REQ#	SURVEY CHANGE: D0498UI
DWN MWM	CHKD R02
DR. ARE	DATE: 5-14-01
SCALE SHOWN	SHEET 2 OF 2

SIZE	DRAWING NUMBER	REV
D	427050-003	-

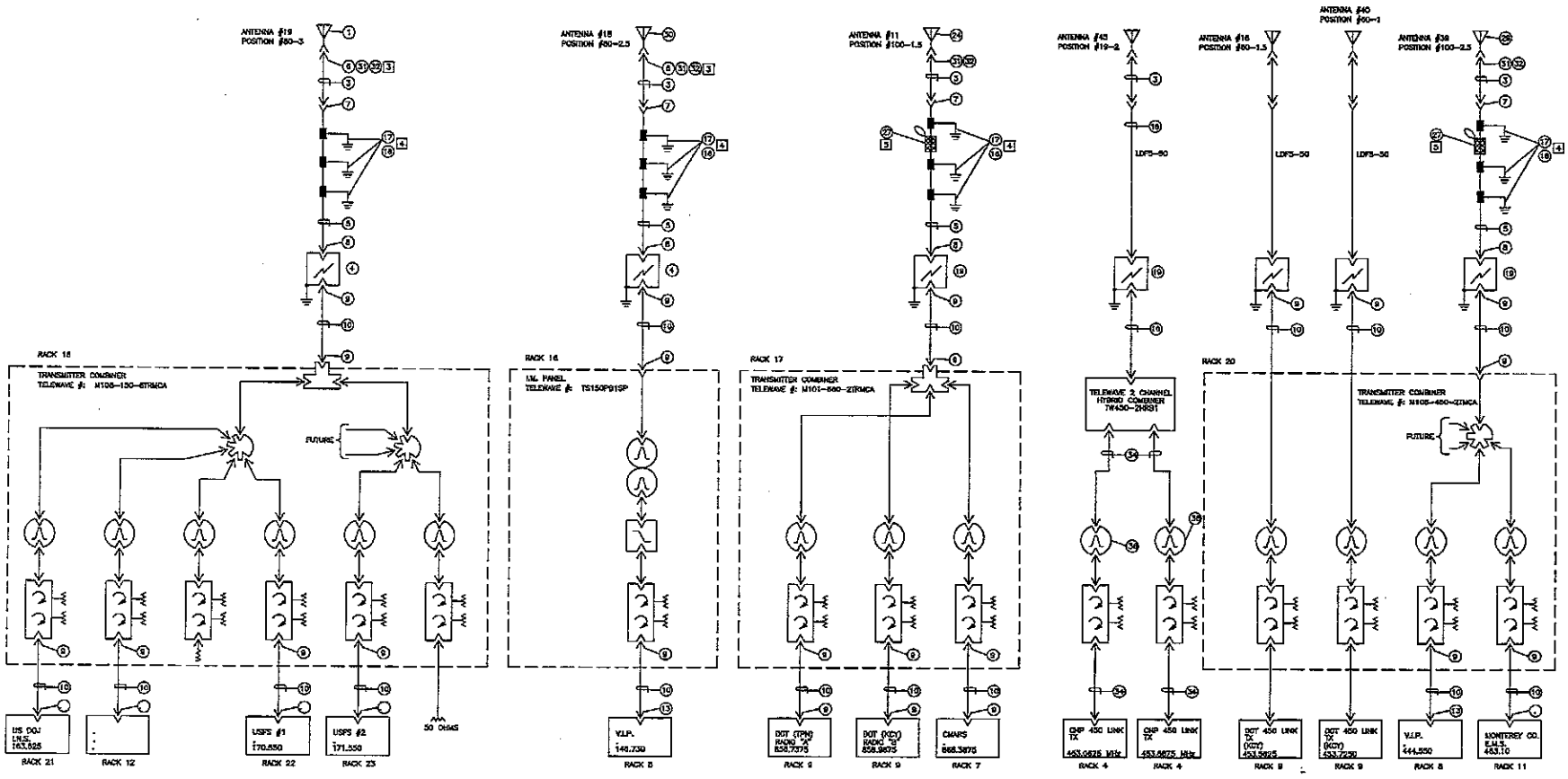

NOTES:
REFER TO SHEET 1.

REV	DATE	BY	DESCRIPTION	APPD

TABLE OF CHANGES

CALANDRA L.O. (CDF)

BLOCK DIAGRAM
ANTENNA SYSTEM PROFILE

CALIFORNIA DEPARTMENT OF FORESTRY AND FIRE PROTECTION
PUBLIC SAFETY COMMUNICATIONS
1131 SERVICE CENTER DRIVE, SACRAMENTO, CA 95811-7234

DRAWN PROJECT	CDF
CHK'D P.C.E. NUMBER	124003P1
DR.	MMM
CHK'D	RBZ
DR.	DC
DATE	5-10-01
SCALE	NONE
SHT.	2 OF 2

REV 1 | SIZE D | DRAWING NUMBER 427050-203 | REV

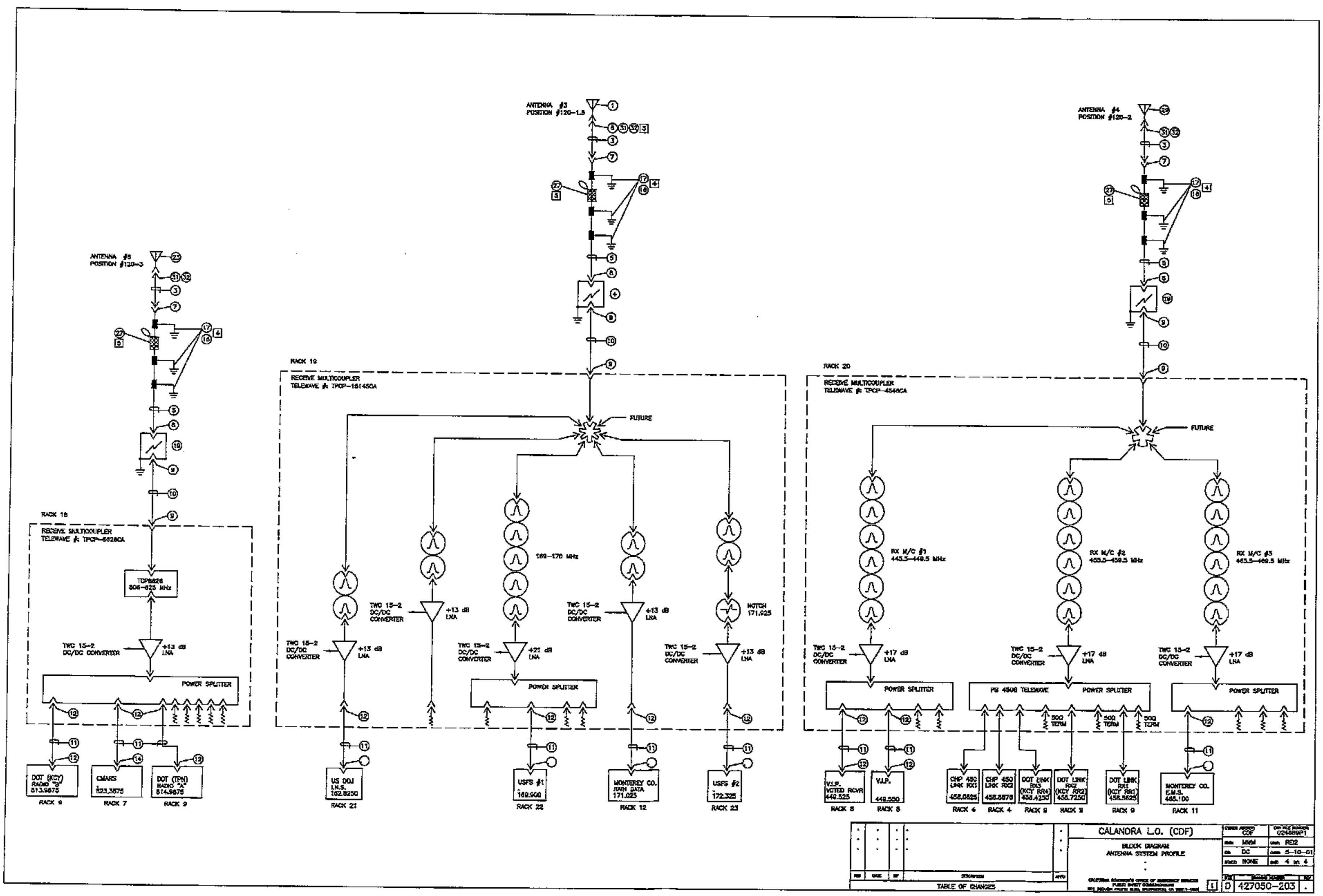
ANTENNA #5
POSITION #120-3
RACK 18
RECEIVE MULTICOUPLER
TELEWAVE #: TPCP-8626CA
TCP8626
806-825 MHz
TWC 15-2
DC/DC CONVERTER
+13 dB
LNA
POWER SPLITTER
DOT (KCY)
RADIO "B"
813.9875
RACK 9
CMARS
823.3875
RACK 7
DOT (TPN)
RADIO "A"
814.9875
RACK 9
ANTENNA #3
POSITION #120-1.5
RACK 19
RECEIVE MULTICOUPLER
TELEWAVE #: TPCP-15145CA
FUTURE
169-170 MHz
NOTCH
171.925
TWC 15-2
DC/DC
CONVERTER
+13 dB
LNA
+21 dB
LNA
POWER SPLITTER
US DOJ
I.N.S.
162.8250
RACK 21
USFS #1
169.900
RACK 22
MONTEREY CO.
RAIN DATA
171.025
RACK 12
USFS #2
172.325
RACK 23
ANTENNA #4
POSITION #120-2
RACK 20
RECEIVE MULTICOUPLER
TELEWAVE #: TPCP-4546CA
FUTURE
RX M/C #1
443.5-449.5 MHz
RX M/C #2
453.5-459.5 MHz
RX M/C #3
463.5-469.5 MHz
+17 dB
LNA
POWER SPLITTER
PS 4506 TELEWAVE
50Ω TERM
V.I.P.
VOTED RCVR
449.525
RACK 8
V.I.P.
449.550
RACK 8
CHP 450
LINK RX1
458.0825
RACK 4
CHP 450
LINK RX2
458.8876
RACK 4
DOT LINK
RX3
(KCY RR4)
458.4250
RACK 9
DOT LINK
RX2
(KCY RR2)
458.7250
RACK 9
DOT LINK
RX1
(KCY RR1)
458.5625
RACK 9
MONTEREY CO.
E.M.S.
466.100
RACK 11
TABLE OF CHANGES
CALANDRA L.O. (CDF)
BLOCK DIAGRAM
ANTENNA SYSTEM PROFILE
CDF
024889P1
MWM
RE2
DC
5-10-01
NONE
4 of 4
D
427050-203