Exhibit A

This page intentionally left blank.

DRAFT RESOLUTION

Before the Housing and Community Development Chief of Planning in and for the County of Monterey, State of California

In the matter of the application of:
SERWIN BRAD & LISA TRS (PLN250058)
RESOLUTION NO. ----
Resolution by the Monterey County HCD Chief of Planning:

1) Finding that the project qualifies for a Class 3 Categorical Exemption pursuant to Section 15303 of the CEQA Guidelines Section and there are no exceptions pursuant to Section 15300.2; and
2) Approving an Administrative Permit and Design Approval to allow the construction of a 3,674 square foot single family dwelling, new 751 square foot three-car garage, new 989 square foot terrace, new retaining walls and new detached prefabricated 651 square foot accessory shed with no permanent electrical; grading to consist of 1260 cubic yards of excavation and 540 cubic yards of fill. Colors and materials to consist of gravel roof (grey), exterior stucco siding (Benjamin Moore Sherwood Tan), aluminum doors & windows (Dark Bronze), steel garage doors (Dark Bronze), trim (Metal Fascia Black), wood/metal fencing (Natural Oak/White), stacked boulder patio walls (Hollister Granite), and concrete entry gate (black metal).

[PLN250058 Serwin, 24 Tehama, Lot 10 Tehama Subdivision Phase 3 Tract 1445, Carmel Valley Master Plan (APN: 169-421-045-000)]

The SERWIN BRAD & LISA TRS application (PLN250058) came on for an administrative decision hearing before the Monterey County HCD Chief of Planning on July 2, 2025. Having considered all the written and documentary evidence, the administrative record, the staff report, oral testimony, and other evidence presented, including the conditions of approval (Attachment 1) and project plans (Attachment 2), the Monterey County HCD Chief of Planning finds and decides as follows:

FINDINGS

1. FINDING: **CONSISTENCY** – The Project, as conditioned, is consistent with the applicable plans and policies which designate this area as appropriate for development.

EVIDENCE:

a) During the course of the review of this application, the project has been reviewed for consistency with the text, policies, and regulations in:
- the 2010 Monterey County General Plan;
- Carmel Valley Master Plan; and
- Monterey County Zoning Ordinance (Title 21).

No conflicts were found to exist. No communications were received during the course of the review of the project indicating any inconsistencies with the text, policies, and regulations in these documents.

b) Project. The project proposes the construction of a 3,674 square foot single family dwelling, new 751 square foot three-car garage, new 989 square foot terrace, new retaining walls and new detached prefabricated 651 square foot accessory shed with no permanent electrical; grading to consist of 1260 cubic yards of excavation and 540 cubic yards of fill.

c) Allowed Use. The property is located at 24 Tehama, Carmel, Carmel Valley Master Plan, 169-421-045-000. The parcel is zoned Rural-Density Residential, 10 Acres per Unit; Design Control District Overlay, Site Plan Review, and Residential Allocation Zoning [RDR/10-D-S-RAZ]. Site Plan Review zoning allows residential development as a principal use, subject to granting an Administrative Permit. A site plan was included in the application showing the location and design of the proposed development and demonstrating that it is appropriate for the site. The project is consistent with the requirements for the Residential Allocation Zoning District. The proposed project is the only dwelling unit proposed on this parcel. No subdivision is proposed, and the new dwelling will be located on an existing legal lot of record in the Tehama Subdivision Phase 3. Therefore, the project is an allowed land use for this site.

d) Lot Legality. The subject 14.791-acre parcel (644,327 square feet), Assessor's Parcel Number 169-421-045-000, is identified in its current configuration in (Volume 23 C&T page 9 lot 10). Additionally, within the Tehama Subdivision – Phase 3 Tract 1445. Therefore, the County recognizes the subject property as a legal lot of record.

e) Design/Neighborhood and Community Character. The zoning of the subject property includes a Design Control overlay ("D) which is intended to regulate the location, size, configuration, materials, and colors of structures to ensure the protection of public viewshed, neighborhood character, and the visual integrity of certain developments without imposing undue restrictions on private property. Colors and materials to consist of gravel roof (grey), exterior stucco siding (Benjamin Moore Sherwood Tan), aluminum doors & windows (Dark Bronze), steel garage doors (Dark Bronze), trim (Metal Fascia Black), wood/metal fencing (Natural Oak/White), stacked boulder patio walls (Hollister Granite), and concrete entry gate (black metal). The project, as designed, assures the protection of the public viewshed, is consistent

with the neighborhood character, and blends in with the surrounding areas. The project design, colors, and materials are consistent with those of other residences and structures in the Tehama Subdivision Phase 3.

f) Development Standards. As proposed, the project meets all required development standards. The development standards for the Rural-Density Residential Zoning District are identified in MCC Section 21.16.020. The minimum setbacks for main structures in the RDR district are 30 feet (front), to a maximum required of 20 feet side and 20 feet rear setback. The maximum allowed height is 30 feet. The proposed project has a maximum height of 14 feet and is within the building envelope established for the proposed site. Therefore, setbacks are consistent with the minimum required and meet the height requirement for the zoning district in which it is located.
The allowable maximum site coverage is 25 percent. The subject property is 644,327 square feet, allowing site coverage of 161,082 square feet at the assigned building envelope. The proposed project would result in structural site coverage of 7,201 square feet (1.12% percent), therefore meeting the coverage standard.

g) The project planner verified that the project on the subject parcel conforms to the plans listed above.

h) The application, project plans, and related support materials submitted by the project applicant to Monterey County HCD-Planning are found in Project File PLN250058.

2. FINDING: **SITE SUITABILITY –** The site is physically suitable for the proposed development and use.

EVIDENCE:

a) The project has been reviewed for site suitability by the following departments and agencies: HCD-Planning, HCD-Engineering Services, HCD-Environmental Services, Environmental Health Bureau, and Monterey County Regional Fire Protection District. County staff reviewed the application materials and plans to verify that the project on the subject site conforms to the applicable plans and regulations. There has been no indication from these departments/agencies that the site is not suitable for the development.

b) The project planner verified that the site is suitable for this use.

c) The application, project plans, and related support materials submitted by the project applicant to Monterey County HCD-Planning found in Project File PLN250058.

3. FINDING: **HEALTH AND SAFETY –** The establishment, maintenance, or operation of the project applied for will not under the circumstances of this particular case be detrimental to the health, safety, peace, morals, comfort, and general welfare of persons residing or working in the neighborhood of such proposed use or be detrimental or injurious to property and improvements in the neighborhood or to the general welfare of the County.

EVIDENCE:

a) The project was reviewed by HCD-Planning, HCD- Engineering Services, HCD-Environmental Services, Environmental Health Bureau, and Monterey County Regional Fire Protection District. There are no project conditions as the staff has ensured that the proposed project will

not have an adverse effect on the health, safety, and welfare of persons either residing or working in the neighborhood.

b) Necessary public facilities will be provided. Cañada Woods Water/Sewer District will serve the proposed project as the water connection and have a new 1,500-gallon on-site wastewater treatment system.

c) The application, project plans, and related support materials submitted by the project applicant to Monterey County HCD-Planning found in Project File PLN250058.

4. FINDING: **NO VIOLATIONS –** The subject property is in compliance with all rules and regulations pertaining to zoning uses, subdivision, and any other applicable provisions of the County's zoning ordinance. No violations exist on the property.

EVIDENCE:

a) Staff reviewed Monterey County HCD-Planning and HCD-Building Services records and is not aware of any violations existing on subject property.

b) Staff researched County records to assess if any violation exists on the subject property.

c) The application, project plans, and related support materials submitted by the project applicant to Monterey County HCD-Planning found in Project File PLN250058.

5. FINDING: **CEQA (Exempt) –** The project is categorically exempt from environmental review, and no unusual circumstances were identified to exist for the proposed project.

EVIDENCE:

a) California Environmental Quality Act (CEQA) Guidelines Section 15303 categorically exempts the development of the new single-family dwelling and accessory structures within residentially zoned areas.

b) The project consists of a new single-family dwelling. Therefore, the proposed development qualifies as a Class 3 Categorical Exemption pursuant to Section 15303 of the CEQA Guidelines.

c) None of the exceptions under CEQA Guidelines Section 15303.2 apply to this project. The project does not involve a designated historical resource, a hazardous waste site, unusual circumstances that would result in a significant effect, or development that would result in a cumulatively significant impact.

d) No adverse environmental effects were identified during the staff review of the development application during a site visit on May 28, 2025.

e) See supporting Findings Nos. 1 and 2. The application, project plans, and related support materials submitted by the project applicant to Monterey County HCD-Planning found in Project File PLN250058.

6. FINDING: **APPEALABILITY –** The decision on this project may be appealed to the Planning Commission.

EVIDENCE:

a) Pursuant to Section 21.80.040 of the Monterey County Zoning Ordinance (Title 21).

DECISION

NOW, THEREFORE, based on the above findings and evidence, the HCD Chief of Planning does hereby:

1. Find the project qualifies for a Class 3 Categorical Exemption pursuant to CEQA Guidelines Section 15303; and
2. Approve the Administrative Permit and Design Approval to allow the construction of a 3,674 square foot single family dwelling, new 751 square foot three-car garage, new 989 square foot terrace, new retaining walls and new detached prefabricated 651 square foot accessory shed with no permanent electrical; grading to consist of 1260 cubic yards of excavation and 540 cubic yards of fill. Colors and materials to consist of gravel roof (grey), exterior stucco siding (Benjamin Moore Sherwood Tan), aluminum doors & windows (Dark Bronze), steel garage doors (Dark Bronze), trim (Metal Fascia Black), wood/metal fencing (Natural Oak/White), stacked boulder patio walls (Hollister Granite), and concrete entry gate (black metal); all of these are in general conformance with the attached sketch (Attachment 2) and subject to the attached conditions (Attachment 1)**,** all being attached hereto and incorporated herein by reference.

PASSED AND ADOPTED this 2nd day of July 2025.

_____

Melanie Beretti, AICP
HCD Chief of Planning

COPY OF THIS DECISION MAILED TO APPLICANT ON DATE

THIS APPLICATION IS APPEALABLE TO THE PLANNING COMMISSION.

IF ANYONE WISHES TO APPEAL THIS DECISION, AN APPEAL FORM MUST BE COMPLETED AND SUBMITTED TO THE SECRETARY OF THE PLANNING ALONG WITH THE APPROPRIATE FILING FEE ON OR BEFORE _____.

This decision, if this is the final administrative decision, is subject to judicial review pursuant to California Code of Civil Procedure Sections 1094.5 and 1094.6. Any Petition for Writ of Mandate must be filed with the Court no later than the 90th day following the date on which this decision becomes final.

NOTES

1. You will need a building permit and must comply with the Monterey County Building Ordinance in every respect.

   Additionally, the Zoning Ordinance provides that no building permit shall be issued, nor any use conducted, otherwise than in accordance with the conditions and terms of the permit granted or until ten days after the mailing of notice of the granting of the permit by the appropriate authority, or after granting of the permit by the Board of Supervisors in the event of appeal.

   Do not start any construction or occupy any building until you have obtained the necessary permits and use clearances from Monterey County HCD-Planning and HCD-Building Services Department office in Salinas.

2. This permit expires 3 years after the above date of granting thereof unless construction or use is started within this period.

Form Rev. 1-27-2021

County of Monterey HCD Planning

DRAFT Conditions of Approval/Implementation Plan/Mitigation Monitoring and Reporting Plan

PLN250058

1. PD001 - SPECIFIC USES ONLY

Responsible Department: Planning

Condition/Mitigation Monitoring Measure: This Administrative Permit (PLN250058) allows for the construction of a 3,674 square foot single family dwelling, new 751 square foot three-car garage, new 989 square foot terrace, new retaining walls and new detached prefabricated 651 square foot accessory shed with no permanent electrical; grading to consist of 1260 cubic yards of excavation and 540 cubic yards of fill. Colors and materials to consist of gravel roof (grey), exterior stucco siding (Benjamin Moore Sherwood Tan), aluminum doors & windows (Dark Bronze), steel garage doors (Dark Bronze), trim (Metal Fascia Black), wood/metal fencing (Natural Oak/White), stacked boulder patio walls (Hollister Granite), concrete entry gate (black metal), exterior siding stucco (Cream/Tan). The property is located at 24 Tehama Carmel (Assessor's Parcel Number 169-421-045-000), Carmel Valley Master Plan. This permit was approved in accordance with County ordinances and land use regulations subject to the terms and conditions described in the project file. Neither the uses nor the construction allowed by this permit shall commence unless and until all of the conditions of this permit are met to the satisfaction of the Director of HCD - Planning. Any use or construction not in substantial conformance with the terms and conditions of this permit is a violation of County regulations and may result in modification or revocation of this permit and subsequent legal action. No use or construction other than that specified by this permit is allowed unless additional permits are approved by the appropriate authorities. To the extent that the County has delegated any condition compliance or mitigation monitoring to the Monterey County Water Resources Agency, the Water Resources Agency shall provide all information requested by the County and the County shall bear ultimate responsibility to ensure that conditions and mitigation measures are properly fulfilled. (HCD - Planning)

Compliance or Monitoring Action to be Performed: The Owner/Applicant shall adhere to conditions and uses specified in the permit on an on-going basis unless otherwise stated.

2. PD002 - NOTICE PERMIT APPROVAL

Responsible Department: Planning

Condition/Mitigation Monitoring Measure: The applicant shall record a Permit Approval Notice. This notice shall state:
"A n Administrative Permit (Resolution Number _____) was approved by Director of Planning for Assessor's Parcel Number 169-421-045-000 on July 2, 2025. The permit was granted subject to 2 conditions of approval which run with the land. A copy of the permit is on file with Monterey County HCD - Planning."

Proof of recordation of this notice shall be furnished to the Director of HCD - Planning prior to issuance of grading and building permits, Certificates of Compliance, or commencement of use, whichever occurs first and as applicable. (HCD - Planning)

Compliance or Monitoring Action to be Performed: Prior to the issuance of grading and building permits, certificates of compliance, or commencement of use, whichever occurs first and as applicable, the Owner/Applicant shall provide proof of recordation of this notice to the HCD - Planning.



JANUARY 31, 2025
BUILDING PERMIT SET SET

CARMEL
SERWIN RESIDENCE

24 TEHAMA
CARMEL, CA 93923
A.P.N. 169-421-045

signum
architecture

JUANCARLOS FERNANDEZ
PROJECT DESIGNER

SIGNUM ARCHITECTURE, LLP 707 963 8831
1675 2nd St, Napa, CA 94559

These drawings are the property of Signum Architecture and have been prepared specifically for this project. These drawings are not to be used for any other project, by any other entity or in another location.

CARMEL
SERWIN RESIDENCE

24 TEHAMA
CARMEL, CA 93923
APN 169-421-045

PROJECT NUMBER	2314
DATE	01/31/2025
CHECKED BY	JCF
DRAWN BY	AVH
SCALE	AS NOTED

REVISIONS

100% SCHEMATIC DESIGN	08/07/2024
DESIGN REVIEW STEP 4	01/22/2025
BUILDING PERMIT	01/31/2025

SHEET NAME

TITLE SHEET

SHEET NUMBER

G0.01

BUILDING PERMIT

GENERAL NOTES

1.1 APPLICABLE BUILDING CODES: TITLE 24

PART 1: 2022 BUILDING STANDARDS ADMINISTRATIVE CODE

PART 2.5: 2022 CALIFORNIA RESIDENTIAL BUILDING CODE

PART 3: 2022 CALIFORNIA ELECTRICAL CODE

PART 4: 2022 CALIFORNIA MECHANICAL CODE

PART 5: 2022 CALIFORNIA PLUMBING CODE

PART 6: 2022 CALIFORNIA ENERGY CODE

~~PART 7: 2022 CALIFORNIA ELEVATOR SAFETY CONSTRUCTION CODE~~

~~PART 8: 2022 CALIFORNIA HISTORICAL BUILDING CODE~~

PART 9: 2022 CALIFORNIA FIRE CODE

~~PART 10: 2022 CALIFORNIA EXISTING BUILDING CODE~~

PART 11: 2022 CALIFORNIA GREEN BUILDING CODE

PART 12: 2022 CALIFORNIA REFERENCED STANDARDS CODE

1.2 THE CONTRACTOR SHALL PROVIDE WORKMAN'S COMPENSATION INSURANCE, LIABILITY INSURANCE AND A PERFORMANCE BOND IN THE AMOUNT OF THE COST OF CONSTRUCTION.

1.3 THE CONTRACTOR SHALL GUARANTEE ALL LABOR AND MATERIAL FOR A MINIMUM OF ONE YEAR, EXCEPTION: ROOF SHALL BE GUARANTEED FROM LEAKAGE FOR A MINIMUM OF TWO YEARS OR AS SPECIFIED.

1.4 THE GENERAL CONTRACTOR SHALL VERIFY ALL SITE CONDITIONS AND DIMENSIONS BEFORE STARTING WORK. THE CONTRACTOR SHALL NOTIFY SIGNUM ARCHITECTURE OF DISCREPANCIES.

1.5 CONTRACTOR SHALL VERIFY EASEMENTS (PUBLIC OR PRIVATE) FOR SEWER, WATER, ELECTRICAL, TELEPHONE, CABLE T.V. AND GAS PRIOR TO STARTING CONSTRUCTION.

1.6 VERIFY ALL UTILITY DATA AND LOCATIONS PRIOR TO ANY WORK. ONSITE UTILITIES SHALL BE COORDINATED WITH THE APPROPRIATE AGENCY OR UTILITY COMPANY.

1.7 WRITTEN DIMENSIONS TAKE PRECEDENCE OVER DRAWINGS. DO NOT SCALE THE DRAWINGS. WHERE DISCREPANCIES OCCUR, NOTIFY SIGNUM ARCHITECTURE FOR CLARIFICATION.

1.8 ACCEPT NO INK OR PENCIL CORRECTIONS TO THESE DRAWINGS WITHOUT THE DESIGNER'S INITIAL OR SIGNATURE. SIGNUM ARCHITECTURE SHALL BE HELD HARMLESS FOR ALL CHANGES NOT IN CONFORMANCE WITH THIS PROVISION.

1.9 ALL USERS OF THESE DRAWINGS AGREE BY USING THESE DRAWINGS TO HOLD SIGNUM ARCHITECTURE HARMLESS FOR ANY AND ALL WORK THAT DOES NOT CONFORM TO REQUIREMENTS AND MINIMUM STANDARDS OF THE APPLICABLE BUILDING CODES, LOCAL ORDINANCES, AND ACCEPTABLE STANDARDS.

1.10 THESE DRAWINGS ARE THE PROPERTY OF SIGNUM ARCHITECTURE AND ARE NOT TO BE USED IN WHOLE OR IN PART FOR ANY WORK OTHER THAN AT THE LOCATION SHOWN ON THESE PLANS.

1.11 SIGNUM ARCHITECTURE SHALL HAVE NO CONTROL OR CHARGE OF AND SHALL NOT BE RESPONSIBLE FOR CONSTRUCTION MEANS, METHODS, TECHNIQUES, SEQUENCES OR PROCEDURES FOR ANY SAFETY PRECAUTIONS AND PROGRAMS IN CONNECTION WITH THE WORK.

1.12 SIGNUM ARCHITECTURE ASSUMES NO RESPONSIBILITY FOR PERFORMANCE OF PRODUCTS OR MATERIALS SPECIFIED.

1.13 ITEMS REQUIRED BY TITLE 24 "ENERGY CONSERVATION STANDARDS" SHALL BE CERTIFIED BY THE CALIFORNIA ENERGY COMMISSION (CEC). EQUIPMENT REQUIRING SCHEDULED MAINTENANCE FOR EFFICIENT OPERATION IS TO BE FURNISHED WITH COMPLETE PRINTED MAINTENANCE INSTRUCTIONS. (EDITION 2001)

1.14 ~~REFER TO THE PROJECT MANUAL FOR DETAILED SPECIFICATIONS, MASTER CONTROL SYSTEM INTERFACE REQUIREMENTS and INPUT/OUTPUT LISTS and REQUIREMENTS.~~

1.15 THE CONTRACTOR SHALL FURNISH ALL SYSTEMS COMPLETE AND WITH ALL ACCESSORIES REQUIRED FOR INSTALLATION IN ACCORDANCE WITH EXCELLENT AND ACCEPTABLE TRADE PRACTICE.

1.16 ALL FIXTURES, EQUIPMENT, PIPING, AND MATERIALS SHALL BE LISTED.

1.17 ALL APPLICATIONS FOR WHICH NO PERMIT IS ISSUED WITHIN 180 DAYS FOLLOWING THE DATE OF APPLICATIONS SHALL AUTOMATICALLY EXPIRE. (R105.3.3 CRC)

1.18 ALL APPLICATIONS FOR WHICH NO PERMIT IS ISSUED WITHIN 180 DAYS FOLLOWING THE DATE OF APPLICATIONS SHALL AUTOMATICALLY EXPIRE. (R105.3.3 CRC)

1.19 EVERY PERMIT ISSUED SHALL BECOME INVALID UNLESS WORK AUTHORIZED IS COMMENCED WITHIN 180 DAYS AFTER ITS ISSUANCE OR IF THE WORK AUTHORIZED IS SUSPENDED OR ABANDONED FOR A PERIOD OF 180 DAYS. A SUCCESSFUL INSPECTION MUST BE OBTAINED WITHIN 180 DAYS.

1.20 THE LOAD RESISTANCE OF GLASS UNDER UNIFORM LOAD SHALL BE DETERMINED IN ACCORDANCE WITH ASTM E1300.

ABBREVIATIONS

&	AND	ELEV	ELEVATION OR	LB	POUND	SA	SUPPLY AIR
∠	ANGLE	LT	ELEVATOR	LT	LIGHT	SC	SOLID CORE
@	AT	ELECT	ELECTRICAL			SCHED	SCHEDULE
℄	CENTERLINE	EMER	EMERGENCY	MACH	MACHINE	SECT	SECTION
[	CHANNEL	EPB	ELECTRICAL PANEL	MAINT	MAINTENANCE	SED	SEE ELECTRICAL DRAWING
ϕ	DIAMETER/ROUND		BOARD	MAX	MAXIMUM	SH	SHELF
∥	PARALLEL	EQ	EQUAL	MB	MACHINE BOLT	SH	SPRINKLER HEAD
⊥	PERPENDICULAR	EXP	EXPANSION	MC	MEDICINE CABINET	SHNGL	SHINGLE
#	NUMBER	EXT	EXTERIOR	MECH	MECHANICAL	SHR	SHOWER
				MEMB	MEMBRANE	SHT	SHEET
AB	ANCHOR BOLT	FA	FIRE ALARM	MTL	METAL	SIM	SIMILAR
AC	ASPHALTIC CONCRETE	FAU	FORCED-AIR UNIT	MFR	MANUFACTURER	SL	SLIDING
ACOUST	ACOUSTICAL	FD	FLOOR DRAIN	MIN	MINIMUM	SLD	SEE LANDSCAPE DRAWINGS
AD	AREA DRAIN	FDN	FOUNDATION	MIR	MIRROR	SMD	SEE MECHANICAL DRAWINGS
ADA	AMERICANS WITH DISABILITIES ACT	FE	FIRE EXTINGUISHER	MISC	MISCELLANEOUS	SPD	SEE PLUMBING DRAWINGS
		FIN	FINISH	MO	MASONRY OPENING	SPEC	SPECIFICATION OR SPECIAL
ADJ	ADJUSTABLE OR ADJACENT	FLR	FLOOR	MSNRY	MASONRY		
		FLUOR	FLUORESCENT	MTD	MOUNTED	SQ	SQUARE
AFF	ABOVE FINISHED FLR	FOC	FACE OF CONCRETE	MI	MALLEABLE IRON	SSD	SEE STRUCTURAL DRAWINGS
ALUM	ALUMINUM	FOF	FACE OF FINISH			S.STL	STAINLESS STEEL
ALT	ALTERNATE	FOS	FACE OF STUD	(N)	NEW	STD	STANDARD
APROX	APPROXIMATE	FOM	FACE OF MASONRY	NEC	NATIONAL ELECTRICAL CODE	STL	STEEL
ARCH	ARCHITECTURAL	FP	FIREPROOF			STOR	STORAGE
ASPH	ASPHALT	FS	FLOOR SINK	NFPA	NATIONAL FIRE PROTECTION ADMINISTR.	STRUC	STRUCTURAL
AV	AUDIO VISUAL	FT	FOOT/FEET			SUSP	SUSPENDED
		FTG	FOOTING	NIC	NOT IN CONTACT	SV	SHEET VINYL
BD	BOARD	FURR	FURRING	NO	NUMBER	SW	SHEAR WALL
BLDG	BUILDING	FUT	FUTURE	NTS	NOT TO SCALE	SYM	SYMMETRICAL
BLK	BLOCK					SYS	SYSTEM
BLKG	BLOCKING	G	GAS	O/	OVER		
BM	BEAM	GA	GAUGE	OA	OVERALL	T	TREAD
BOT	BOTTOM	GALV	GALVANIZED	OBS	OBSCURE	TB	TOWEL BAR
		GB	GRAB BAR	OC	ON CENTER	TC	TOP OF CURB
CAB	CABINET	GD	GARBAGE DISPOSAL	OD	OUTSIDE DIMENSION	TEL	TELEPHONE
CB	CATCH BASIN	GEN	GENERAL	OH	OVERHANG	TEMP	TEMPERED
CBC	CALIFORNIA BUILDING CODE	GFI	GROUND FAULT INTERRUPTER	OPNG	OPENING	T&G	TONGUE & GROOVE
		GL	GLASS	OPP	OPPOSITE	THK	THICK
CEM	CEMENT	GRD	GROUND			TOC	TOP OF CONCRETE
CER.T.	CERAMIC TILE	GR	GRADE	PB	PANEL BOARD	TOW	TOP OF WALL
CG	CORNER GUARD	GSM	GALVANIZED SHEET METAL	PERM	PERMANENT	TPH	TOILET PAPER HOLDER
CI	CAST IRON	GYP	GYPSUM	PL	PLATE OR PROPERTY LINE	TOP	TOP PLATE
CJ	CONTROL JOINT			P. LAM	PLASTIC LAMINATE	TRD	TREAD
CLG	CEILING	HB	HOSE BIB	PLAS	PLASTER	TV	TELEVISION
CLR	CLEAR	HD	HEAD	PLYWD	PLYWOOD	TYP	TYPICAL
CO	CASED OPENING	HDR	HEADER	PNL	PANEL		
COL	COLUMN	HGR	HANGER	PNT	PAINT		
CONC	CONCRETE	HT	HEIGHT	PRCST	PRECAST	UBC	UNIFORM BUILDING CODE
CONN	CONNECTION	HORIZ	HORIZONTAL	PSI	POUNDS PER SQ. INCH	UMC	UNIFORM MECHANICAL CODE
CONTR	CONTRACTOR	HR	HOUR	PT	POINT	UON	UNLESS OTHERWISE NOTED
CW	COLD WATER	HW	HOT WATER				
				(R)	REMOVE	VERT	VERTICAL
DBL	DOUBLE	ICBO	INTERNATIONAL	R	RISER	VGDF	VERTICAL GRAIN
DET	DETAIL		CONFERENCE OF	RAD	RADIUS		DOUGLAS FIR
DF	DOUGLAS FIR OR DRINKING FOUNTAIN		BUILDING OFFICIALS	RA	RETURN AIR	VOL	VOLUME
		ID	INSIDE DIMENSION	RD	ROOF DRAIN		
DIA	DIAMETER	IN	INCH	REC	RECESSED	WSCT	WAINSCOT
DIAG	DIAGONAL	INSUL	INSULATION	REF	REFERENCE	W	WASHER
DIM	DIMENSION	INT	INTERIOR	REFR	REFRIGERATOR	W/	WITH
DN	DOWN			REINF	REINFORCED	W/O	WITHOUT
DP	DAMPPROOFING	JAN	JANITOR	REMOV	REMOVABLE	WC	WATERCLOSET
DR	DOOR	JT	JOINT	REQ	REQUIRED	WD	WOOD
DWR	DRAWER	JST	JOIST	RESIL	RESILIENT	WH	WATER HEATER
DS	DOWNSPOUT			RET	RETAINING	WNDW	WINDOW
DWG	DRAWING	KIT	KITCHEN	REG	REGULAR	WP.MEMB.	WATERPROOF MEMBRANE
				RGTR	REGISTER	WT	WEIGHT
(E)	EXISTING	LAB	LABORATORY	REV	REVISION	WR	WATER RESISTANT
EA	EACH	LAM	LAMINATE	RM	ROOM	WW	WELDED WIRE
EXP.JT.	EXPANSION JOINT	LAV	LAVATORY	RWD	REDWOOD		

SPECIAL INSPECTION

THE FOLLOWING ITEMS SHALL BE INSPECTED IN ACCORDANCE WITH CBC SECTION 1704 BY A CERTIFIED SPECIAL INSPECTOR FROM AN ESTABLISHED TESTING AGENCY. ALL INSPECTION SHALL BE CONTINUOUS, UNLESS OTHERWISE NOTED.

- GRADING, EXCAVATIONS AND FILL (BY GEOTECHNICAL ENGINEER)
- CONCRETE REINFORCING PLACEMENT
- CONCRETE PLACEMENT
- ANCHOR BOLT PLACEMENT
- EPOXY ANCHOR BOLTS AND REINFORCING STEEL

SYMBOLS AND REFERENCES

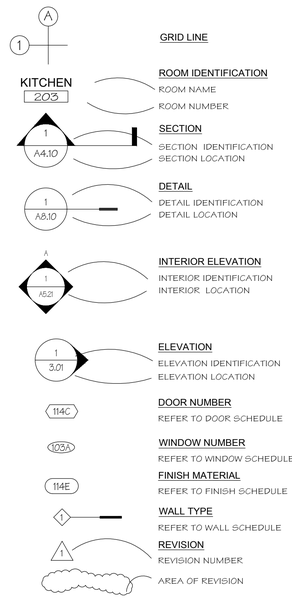

PROJECT DIRECTORY

OWNER: LISA & BRAD SERWIN
CONTACT: LISA SERWIN
LSERWIN3@GMAIL.COM

ARCHITECT: SIGNUM ARCHITECTURE, LLP
CONTACT: JUANCARLOS FERNANDEZ
1675 2ND STREET
NAPA, CA 94559
JUANCARLOS@SIGNUMARCHITECTURE.COM

LANDSCAPE ARCHITECT: WILD LAND WORKSHOP
CONTACT: MARIE GOULET
CARMEL VALLEY, CA 93924
MARIE@WILDLANDWORKSHOP.COM

CIVIL ENGINEER: L&S ENGINEERING & SURVEYING
CONTACT: MARK STERNER
2460 GARDEN ROAD, SUITE G
MONTEREY, CA 93940
MARK@LANDSENGINEERS.COM

STRUCTURAL ENGINEER: BKG STRUCTURAL ENGINEERS
CONTACT: ADAM KLEIN
2460 GARDEN ROAD, SUITE G
MONTEREY, CA 93940
MARK@LANDSENGINEERS.COM

MECHANICAL & PLUMBING ENGINEER: OPTIMIZED ENERGY
CONTACT: ETHAN FELLERSEN
5734 LONETREE BOULEVARD
ROCKLIN, CA 95765
ESF@OEFINC.COM

GEOTECH ENGINEER: HARO, KASUNICH & ASSOCIATES
CONTACT: ASHTON BUCKNER
116 EAST LAKE AVE.
WATSONVILLE, CA 95076
ABUCKNER@HAROKASUNICH.COM

TITLE 24 CONSULTANT: MONTEREY ENERGY GROUP
CONTACT: BEN RAYBOULD
26465 CARMEL RANCHO BLVD, SUITE 8
CARMEL, CA 93923
BEN@MEG4.COM

VICINITY MAP

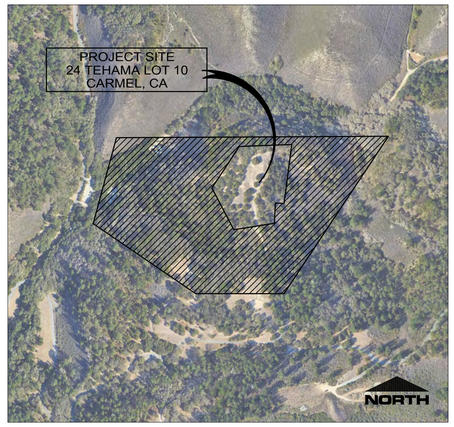

PROJECT INFORMATION

ADDRESS:	24 TEHAMA LOT 10 CARMEL, CALIFORNIA
ASSESSOR PARCEL #:	169-421-045-000
PARCEL SIZE:	15.43 ACRES
FLOOD ZONE:	N/A
ZONING DISTRICT:	RDR / 10-D-S-RAZ
BUILDING ENVELOPE:	2.2 ACRES
TOTAL SITE COVERAGE:	HOUSE: 3,674 SQ. FT. GARAGE: 751 SQ.FT. TERRACES: 989 SQ.FT.
FIRE HAZARD SEVERITY ZONE:	N/A
CONSTRUCTION:	TYPE - VB
# STORIES:	1

PROJECT DESCRIPTION

NEW CONSTRUCTION OF PRIVATE RESIDENCE ON PROPERTY CONSISTS OF A 2 BED/2.5 BATH PROGRAM W/3 CAR GARAGE.

UNDER SEP. PERMIT

* SOLAR / PV

DESIGN LOADS

DESIGN LOADS			
GENERAL		EARTHQUAKE LOAD	
BUILDING CODE	2020 CALIFORNIA BUILDING CODE	IMPORTANCE FACTOR	Ie = 1.0
RISK CATEGORY	II	SITE CLASS	C
DEAD LOAD		DESIGN CATEGORY	D
ROOF	21 PSF	SPECTRAL ACCELERATIONS	Ss = 1.305, S1 = 0.484
FIRST FLOOR	N/A	DESIGN ACCELERATIONS	SDS = 1.044, SD1 = 0.484
LIVE LOAD		RESPONSE MODIFICATION COEFFICIENT	R = 6.5 (LIGHT-FRAMED SHEATHED WALLS)
ROOF	20 PSF	ANALYSIS PROCEDURE USED	EQUIVALENT LATERAL FORCE
TYPICAL FLOOR	40 PSF	SEISMIC RESPONSE COEFFICIENT	Cs = 0.16
WIND LOAD		REDUNDANCY FACTOR	r = 1.3
DESIGN WIND SPEED	92 MPH		
DESIGN PROCEDURE	DIRECTIONAL PROCEDURE		
EXPOSURE CATEGORY	B		
DIRECTIONALITY FACTOR	Kd = 0.85		
TOPOGRAPHIC FACTOR	Kzt = 1.07		

SHEET INDEX

GENERAL

G0.01	COVER SHEET
G0.02	PROJECT INFORMATION
G0.03	SITE PLAN
G0.04	NORTH / SOUTH SITE SECTIONS
G0.05	EAST / WEST SITE SECTIONS

ENERGY

T-1	ENERGY COMPLIANCE
T-2	ENERGY COMPLIANCE
T-3	ENERGY COMPLIANCE
T-4	LOW-RISE RES. MANDATORY MEASURES

CIVIL

C1	GRADING PLAN TITLE SHEET
C2	OVERALL PROJECT SITE
C3	DRIVEWAY GRADING PLAN
C4	SITE GRADING PLAN
C5	SITE CROSS SECTIONS
C6	STORMWATER CONTROL PLAN
C7	SITE UTILITY PLAN
C8	CONSTRUCTION DETAILS
C9	EROSION CONTROL PLAN
C10	CONSTRUCTION MANAGEMENT PLAN

LANDSCAPE

L0.00	COVER SHEET
L0.01	SITE ANALYSIS
L0.02	TREE PROTECTION PLAN
L0.03	FUEL MANAGEMENT PLAN
L1.00	LANDSCAPE SITE PLAN
L2.00	PLANTING PLAN
L3.00	IRRIGATION DIAGRAM
L3.01	IRRIGATION LEGEND
L3.02	IRRIGATION DETAILS
L3.03	IRRIGATION DETAILS
L4.00	LANDSCAPE PLANTING PLAN
L5.00	CONSRUCTION DETAILS
L5.01	CONSRUCTION DETAILS

ARCHITECTURAL

A1.01	AREA PLAN
A1.02	OVERALL FLOOR PLAN
A2.11	FLOOR PLAN - GREAT ROOM & GUEST WING
A2.12	FLOOR PLAN - MASTER WING
A2.21	ROOF PLAN
A3.01	EXTERIOR ELEVATIONS
A3.02	EXTERIOR ELEVATIONS
A4.01	BUILDING SECTIONS
A4.02	BUILDING SECTIONS
A4.03	BUILDING SECTIONS
A4.11	WALL SECTIONS
A4.12	WALL SECTIONS
A5.31	FIREPLACE DETAILS - LIVING ROOM
A5.32	FIREPLACE DETAILS - PATIO
A5.33	FIREPLACE SPECIFICATIONS - LIVING ROOM
A5.34	FIREPLACE SPECIFICATIONS - PATIO
A7.01	DOOR SCHEDULE
A7.02	WINDOW SCHEDULE
A8.01	ARCHITECTURAL DETAILS
A8.02	WINDOW DETAILS
A8.21	ROOF DETAILS
A8.31	ENTRY DESIGN
A8.41	ACCESSORY SHED

STRUCTURAL

S0.0	GENERAL NOTES
S0.0	GENERAL NOTES
S1.0	TYP. CONCRETE DETAILS
S1.1	TYP. WOOD DETAILS
S1.2	TYP. WOOD DETAILS
S1.3	PLAN NOTES & LEGEND
S2.1A	FOUNDATION PLAN
S2.1B	FOUNDATION PLAN
S2.2A	ROOF FRAMING PLAN
S2.2B	ROOF FRAMING PLAN
S3.0	SECTIONS
S3.1	SECTIONS
S3.2	SECTIONS
S4.0	FRAMING DETAILS
S4.1	FRAMING DETAILS
S5.0	FRAMING DETAILS
S5.1	FRAMING DETAILS
S5.2	FRAMING DETAILS
WSWH2	STRONG-WALL FRAMING DETAILS
TJI1	TJI TRUSS DETAILS

MECHANICAL

M0	GENERAL NOTES, SCHEDULES, & DETAILS
M1	MECHANICAL PLAN
M2	RADIANT ZONING PLAN

ELECTRICAL

E1.01	ELECTRICAL SITE PLAN
E3.01	ELECTRIC PLAN - GREAT ROOM & GUEST WING
E3.02	ELECTRIC PLAN - MASTER WING
E5.01	SINGLE LINE DIAGRAM

PLUMBING

P0	GENERAL NOTES, SCHEDULES, & DETAILS
P1	PLUMBING PLAN - WATER AND GAS
P2	PLUMBING PLAN - SEWER AND VENT

signum architecture

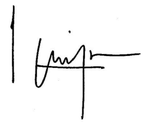

JUANCARLOS FERNANDEZ
PROJECT DESIGNER

SIGNUM ARCHITECTURE, LLP 707 963 8831
1675 2nd St, Napa, CA 94559

These drawings are the property of Signum Architecture and have been prepared specifically for this project. These drawings are not to be used for any other project, by any other entity or in another location.

CARMEL SERWIN RESIDENCE

24 TEHAMA
CARMEL, CA 93923
APN 169-421-045

PROJECT NUMBER	2314
DATE	01/31/2025
CHECKED BY	JCF
DRAWN BY	AVH
SCALE	AS NOTED

REVISIONS

100% SCHEMATIC DESIGN	08/07/2024
DESIGN REVIEW STEP 4	01/22/2025
BUILDING PERMIT	01/31/2025

SHEET NAME

PROJECT INFORMATION

SHEET NUMBER

G0.02

BUILDING PERMIT



OVERALL SITE PLAN 1

SCALE: 1/64" = 1'-0"

N

signum architecture

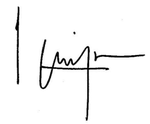

JUANCARLOS FERNANDEZ
PROJECT DESIGNER

SIGNUM ARCHITECTURE, LLP 707 963 8831
1675 2nd St, Napa, CA 94559

These drawings are the property of Signum Architecture and have been prepared specifically for this project. These drawings are not to be used for any other project, by any other entity or in another location.

CARMEL
SERWIN RESIDENCE

24 TEHAMA
CARMEL, CA 93923
APN 169-421-045

PROJECT NUMBER	2314
DATE	01/31/2025
CHECKED BY	JCF
DRAWN BY	AVH
SCALE	AS NOTED

REVISIONS

100% SCHEMATIC DESIGN	08/07/2024
DESIGN REVIEW STEP 4	01/22/2025
BUILDING PERMIT	01/31/2025

SHEET NAME

SITE PLAN

SHEET NUMBER

G0.03

BUILDING PERMIT

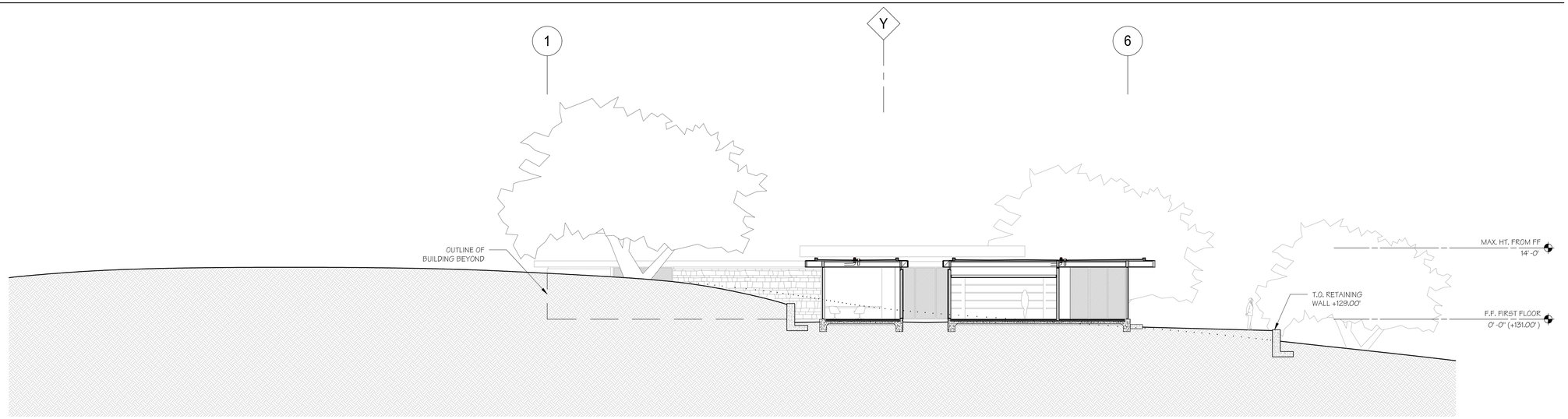

SITE SECTION 3
SCALE: 3/32" = 1'-0"

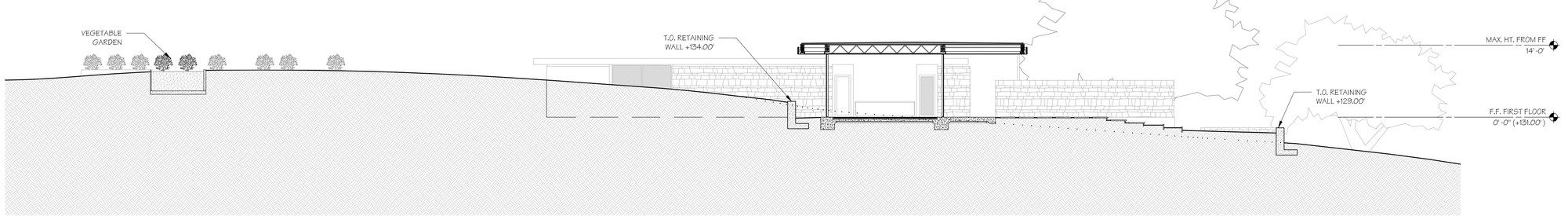

SITE SECTION 2
SCALE: 3/32" = 1'-0"

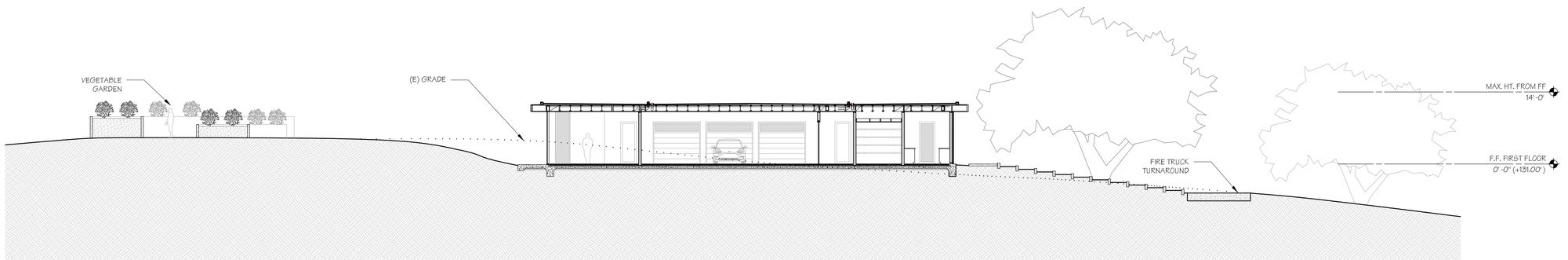

SITE SECTION 1
SCALE: 3/32" = 1'-0"

signum architecture

JUANCARLOS FERNANDEZ
PROJECT DESIGNER

SIGNUM ARCHITECTURE, LLP 707 963 8831
1675 2nd St, Napa, CA 94559

These drawings are the property of Signum Architecture and have been prepared specifically for this project. These drawings are not to be used for any other project, by any other entity or in another location.

CARMEL
SERWIN RESIDENCE

24 TEHAMA
CARMEL, CA 93923
APN 169-421-045

PROJECT NUMBER	2314
DATE	01/31/2025
CHECKED BY	JCF
DRAWN BY	AVH
SCALE	AS NOTED

REVISIONS

100% SCHEMATIC DESIGN	08/07/2024
DESIGN REVIEW STEP 4	01/22/2025
BUILDING PERMIT	01/31/2025

SHEET NAME

NORTH / SOUTH SITE SECTIONS

SHEET NUMBER

G0.04

BUILDING PERMIT

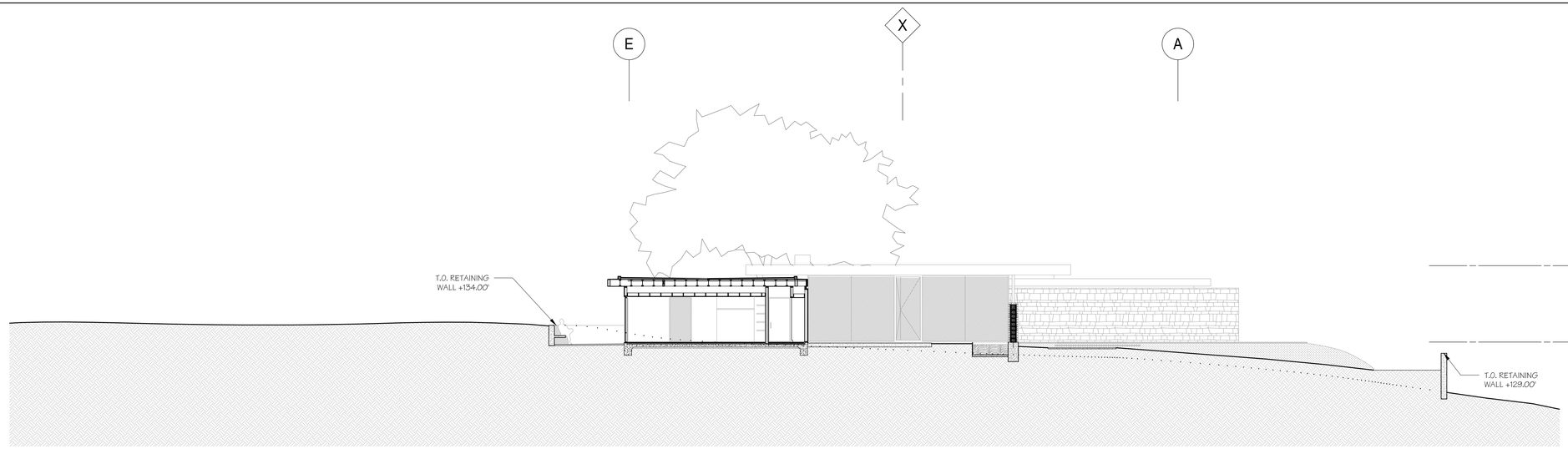

SITE SECTION 3
SCALE: 3/32" = 1'-0"

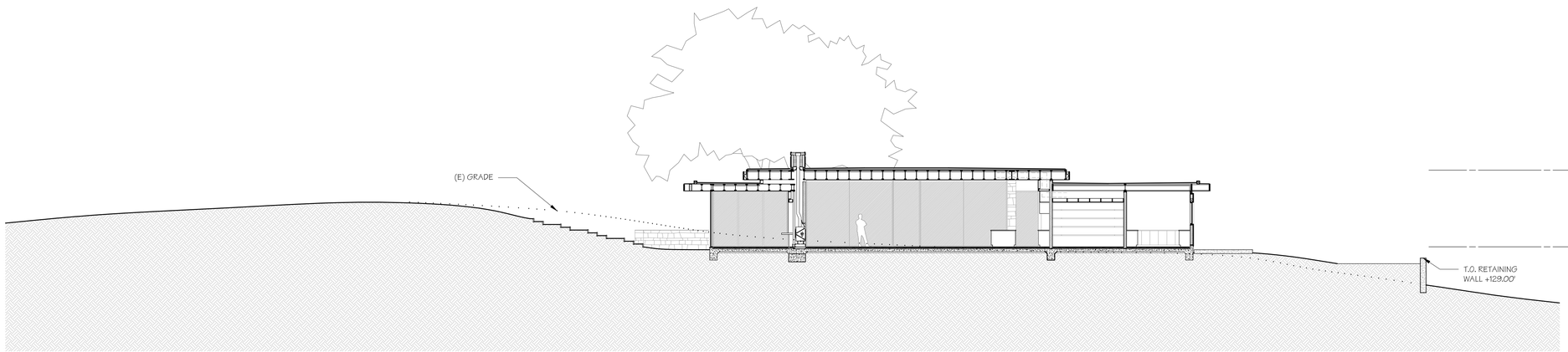

SITE SECTION 2
SCALE: 3/32" = 1'-0"

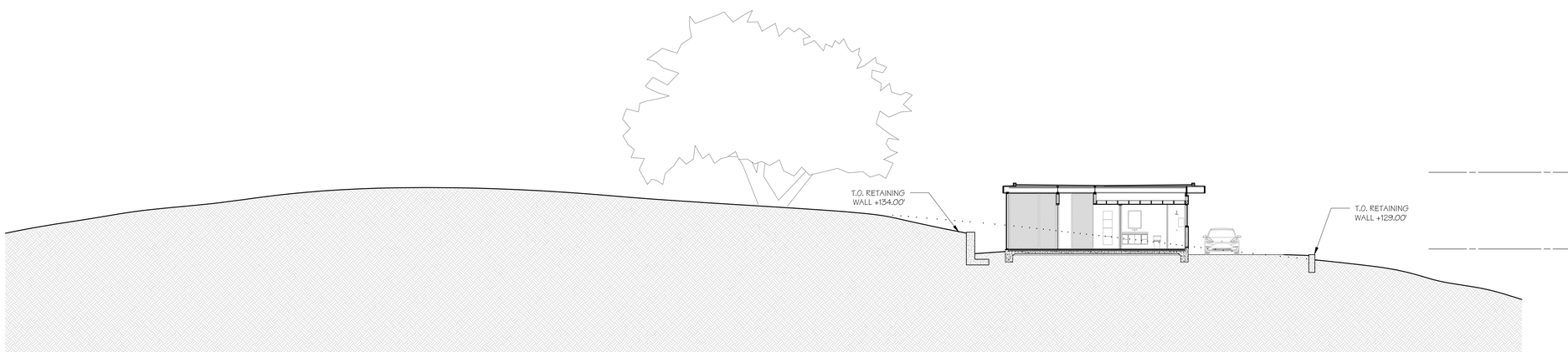

SITE SECTION 1
SCALE: 3/32" = 1'-0"

signum architecture

JUANCARLOS FERNANDEZ
PROJECT DESIGNER

SIGNUM ARCHITECTURE, LLP 707 963 8831
1675 2nd St, Napa, CA 94559

These drawings are the property of Signum Architecture and have been prepared specifically for this project. These drawings are not to be used for any other project, by any other entity or in another location.

CARMEL
SERWIN RESIDENCE

24 TEHAMA
CARMEL, CA 93923
APN 169-421-045

PROJECT NUMBER	2314
DATE	01/31/2025
CHECKED BY	JCF
DRAWN BY	AVH
SCALE	AS NOTED

REVISIONS

100% SCHEMATIC DESIGN	08/07/2024
DESIGN REVIEW STEP 4	01/22/2025
BUILDING PERMIT	01/31/2025

SHEET NAME

EAST / WEST
SITE SECTIONS

SHEET NUMBER

G0.05

BUILDING PERMIT

THE USE OF THESE DRAWINGS AND SPECIFICATIONS IS RESTRICTED TO THE ORIGINAL SITE FOR WHICH THEY WERE PREPARED. PUBLICATION THEREOF IS EXPRESSLY LIMITED TO SUCH USE. REPRODUCTION OR PUBLICATION BY ANY MEANS, IN WHOLE OR IN PART, IS PROHIBITED. TITLE TO THESE DRAWINGS AND SPECIFICATIONS REMAINS WITH THE ENGINEER WITHOUT PREJUDICE. VISUAL CONTACT WITH THESE DRAWINGS AND SPECIFICATIONS SHALL CONSTITUTE PRIMA FACIA EVIDENCE OF THE ACCEPTANCE OF THESE RESTRICTIONS. MONTEREY ENERGY GROUP, INC.

CERTIFICATE OF COMPLIANCE - RESIDENTIAL PERFORMANCE COMPLIANCE METHOD — **CF1R-PRF-01-E**

Project Name: 24 Tehama (Serwin Res.) — **Calculation Date/Time:** 2024-12-13T10:14:23-08:00 — **(Page 1 of 14)**

Calculation Description: Title 24 Analysis — **Input File Name:** 24-602 24 Tehama (Serwin Res.).ribd22x

GENERAL INFORMATION					
01	Project Name	24 Tehama (Serwin Res.)			
02	Run Title	Title 24 Analysis			
03	Project Location	24 Tehama			
04	City	Carmel	05	Standards Version	2022
06	Zip code	93923	07	Software Version	EnergyPro 9.2
08	Climate Zone	3	09	Front Orientation (deg/ Cardinal)	190
10	Building Type	Single family	11	Number of Dwelling Units	1
12	Project Scope	Newly Constructed	13	Number of Bedrooms	2
14	Addition Cond. Floor Area (ft²)	0	15	Number of Stories	1
16	Existing Cond. Floor Area (ft²)	n/a	17	Fenestration Average U-factor	0.39
18	Total Cond. Floor Area (ft²)	3737	19	Glazing Percentage (%)	59.16%
20	ADU Bedroom Count	n/a	21	ADU Conditioned Floor Area	n/a
22	Fuel Type	Natural gas	23	No Dwelling Unit:	No

COMPLIANCE RESULTS	
01	Building Complies with Computer Performance
02	This building incorporates features that require field testing and/or verification by a certified HERS rater under the supervision of a CEC-approved HERS provider.
03	This building incorporates one or more Special Features shown below

CERTIFICATE OF COMPLIANCE - RESIDENTIAL PERFORMANCE COMPLIANCE METHOD — **CF1R-PRF-01-E**

Project Name: 24 Tehama (Serwin Res.) — **Calculation Date/Time:** 2024-12-13T10:14:23-08:00 — **(Page 2 of 14)**

Calculation Description: Title 24 Analysis — **Input File Name:** 24-602 24 Tehama (Serwin Res.).ribd22x

ENERGY DESIGN RATINGS	Energy Design Ratings			Compliance Margins		
	Source Energy (EDR1)	Efficiency[1] EDR (EDR2efficiency)	Total[2] EDR (EDR2total)	Source Energy (EDR1)	Efficiency[1] EDR (EDR2efficiency)	Total[2] EDR (EDR2total)
Standard Design	31.7	43.6	30.6			
Proposed Design	25.3	41.6	21.9	6.4	2	8.7
RESULT[3]: PASS						

[1]Efficiency EDR includes improvements like a better building envelope and more efficient equipment
[2]Total EDR includes efficiency and demand response measures such as photovoltaic (PV) system and batteries
[3]Building complies when source energy, efficiency and total compliance margins are greater than or equal to zero and unmet load hour limits are not exceeded

- Standard Design PV Capacity: 3.01 kWdc
- PV System resized to 3.01 kWdc (a factor of 3.006) to achieve 'Standard Design PV' PV scaling

CERTIFICATE OF COMPLIANCE - RESIDENTIAL PERFORMANCE COMPLIANCE METHOD — **CF1R-PRF-01-E**

Project Name: 24 Tehama (Serwin Res.) — **Calculation Date/Time:** 2024-12-13T10:14:23-08:00 — **(Page 3 of 14)**

Calculation Description: Title 24 Analysis — **Input File Name:** 24-602 24 Tehama (Serwin Res.).ribd22x

ENERGY USE SUMMARY						
Energy Use	Standard Design Source Energy (EDR1) (kBtu/ft² -yr)	Standard Design TDV Energy (EDR2) (kTDV/ft² -yr)	Proposed Design Source Energy (EDR1) (kBtu/ft² -yr)	Proposed Design TDV Energy (EDR2) (kTDV/ft² -yr)	Compliance Margin (EDR1)	Compliance Margin (EDR2)
Space Heating	3.7	27.58	3.64	27.47	0.06	0.11
Space Cooling	0	0	0.01	3.17	-0.01	-3.17
IAQ Ventilation	0.51	5.51	0.57	6.17	-0.06	-0.66
Water Heating	2.63	10.91	2.36	9.97	0.27	0.94
Self Utilization/Flexibility Credit				-4.84		4.84
Efficiency Compliance Total	**6.84**	**44**	**6.58**	**41.94**	**0.26**	**2.06**
Photovoltaics	-0.69	-21.16	-0.69	-23.1		
Battery			-1.7	-11.37		
Flexibility						
Indoor Lighting	0.67	6.9	0.67	6.9		
Appl. & Cooking	1.45	9.63	1.45	9.68		
Plug Loads	1.21	12.86	1.21	12.86		
Outdoor Lighting	0.18	1.73	0.18	1.73		
TOTAL COMPLIANCE	**9.66**	**53.96**	**7.7**	**38.64**		

CERTIFICATE OF COMPLIANCE - RESIDENTIAL PERFORMANCE COMPLIANCE METHOD — **CF1R-PRF-01-E**

Project Name: 24 Tehama (Serwin Res.) — **Calculation Date/Time:** 2024-12-13T10:14:23-08:00 — **(Page 4 of 14)**

Calculation Description: Title 24 Analysis — **Input File Name:** 24-602 24 Tehama (Serwin Res.).ribd22x

ENERGY USE INTENSITY	Standard Design (kBtu/ft² - yr)	Proposed Design (kBtu/ft² - yr)	Compliance Margin (kBtu/ft² - yr)	Margin Percentage
Gross EUI[1]	11.16	11.16	0	0
Net EUI[2]	6.92	6.92	0	0

Notes
1. Gross EUI is Energy Use Total (not including PV) / Total Building Area.
2. Net EUI is Energy Use Total (including PV) / Total Building Area.

REQUIRED PV SYSTEMS

01	02	03	04	05	06	07	08	09	10	11	12
DC System Size (kWdc)	Exception	Module Type	Array Type	Power Electronics	CFI	Azimuth (deg)	Tilt Input	Array Angle (deg)	Tilt: (x in 12)	Inverter Eff. (%)	Annual Solar Access (%)
3.01	NA	Standard (14-17%)	Fixed	none	true	150-270	n/a	n/a	<=7:12	96	98

BATTERY SYSTEMS

01	02	03	04	05	06	07
Control	Capacity (kWh)	Charging		Discharging		Round Trip Efficiency
		Charging Efficiency	Charging Rate (kW)	Discharging Efficiency	Discharging Rate (kW)	
AdvancedDR	10	0.95	n/a	0.95	n/a	0.9

CERTIFICATE OF COMPLIANCE - RESIDENTIAL PERFORMANCE COMPLIANCE METHOD — **CF1R-PRF-01-E**

Project Name: 24 Tehama (Serwin Res.) — **Calculation Date/Time:** 2024-12-13T10:14:23-08:00 — **(Page 5 of 14)**

Calculation Description: Title 24 Analysis — **Input File Name:** 24-602 24 Tehama (Serwin Res.).ribd22x

REQUIRED SPECIAL FEATURES

The following are features that must be installed as condition for meeting the modeled energy performance for this computer analysis.

- Battery System: 10 kWh (Self Utilization Credit taken)
- Indoor air quality, balanced fan
- IAQ Ventilation System Heat Recovery: minimum 75 SRE and 80 ASRE
- IAQ Ventilation System: supply outside air inlet, filter, and H/ERV cores accessible per RACM Reference Manual
- IAQ Ventilation System: fault indicator display
- Window overhangs and/or fins
- Non-standard duct location (any location other than attic)
- Recirculating with demand control, push button

HERS FEATURE SUMMARY

The following is a summary of the features that must be field-verified by a certified HERS Rater as a condition for meeting the modeled energy performance for this computer analysis. Additional detail is provided in the building tables below. Registered CF2Rs and CF3Rs are required to be completed in the HERS Registry

- Indoor air quality ventilation
- Kitchen range hood
- Minimum Airflow
- Fan Efficacy Watts/CFM
- Verified heat pump rated heating capacity
- Duct leakage testing
- Ducts located entirely in conditioned space confirmed by duct leakage testing

BUILDING - FEATURES INFORMATION

01	02	03	04	05	06	07
Project Name	Conditioned Floor Area (ft²)	Number of Dwelling Units	Number of Bedrooms	Number of Zones	Number of Ventilation Cooling Systems	Number of Water Heating Systems
24 Tehama (Serwin Res.)	3737	1	2	1	0	1

ZONE INFORMATION

01	02	03	04	05	06	07
Zone Name	Zone Type	HVAC System Name	Zone Floor Area (ft²)	Avg. Ceiling Height	Water Heating System 1	Status
Entire House	Conditioned	Radiant Heating + A/C1	3737	10.59	DHW Sys 1	New

CERTIFICATE OF COMPLIANCE - RESIDENTIAL PERFORMANCE COMPLIANCE METHOD — **CF1R-PRF-01-E**

Project Name: 24 Tehama (Serwin Res.) — **Calculation Date/Time:** 2024-12-13T10:14:23-08:00 — **(Page 6 of 14)**

Calculation Description: Title 24 Analysis — **Input File Name:** 24-602 24 Tehama (Serwin Res.).ribd22x

OPAQUE SURFACES

01	02	03	04	05	06	07	08
Name	Zone	Construction	Azimuth	Orientation	Gross Area (ft²)	Window and Door Area (ft2)	Tilt (deg)
FWall	Entire House	R-21 Wall	190	Front	1250.8	662.48	90
LWall	Entire House	R-21 Wall	280	Left	1170.8	583.334	90
BWall	Entire House	R-21 Wall	190	Front	1250.8	741.905	90
RWall	Entire House	R-21 Wall	100	Right	835.8	206.697	90
Partition Wall	Entire House>>__Garage__	R-21 Wall1	n/a	n/a	800	24	n/a
Partition Wall2	Entire House>>__Garage__	R-21 Wall1	n/a	n/a	8	0	n/a
Partition Wall3	Entire House>>__Garage__	R-21 Wall1	n/a	n/a	7	0	n/a
RWall2	__Garage__	R-21 Wall	100	Right	335	0	90

OPAQUE SURFACES - CATHEDRAL CEILINGS

01	02	03	04	05	06	07	08	09	10	11
Name	Zone	Construction	Azimuth	Orientation	Area (ft²)	Skylight Area (ft²)	Roof Rise (x in 12)	Roof Reflectance	Roof Emittance	Cool Roof
Flat Roof	Entire House	Flat R-30 Roof + R-10	0	n/a	3737	16.4	0	0.1	0.85	No
Flat Roof2	__Garage__	Flat R-30 Roof + R-10	0	n/a	768	0	0	0.1	0.85	No

FENESTRATION / GLAZING

01	02	03	04	05	06	07	08	09	10	11	12	13	14
Name	Type	Surface	Orientation	Azimuth	Width (ft)	Height (ft)	Mult.	Area (ft²)	U-factor	U-factor Source	SHGC	SHGC Source	Exterior Shading
101B/101C	Window	FWall	Front	190	15.5	11.83	2	366.73	0.39	NFRC	0.28	NFRC	Bug Screen

REVISIONS:	BY:

MONTEREY ENERGY GROUP
Consulting Mechanical Engineering
26465 Carmel Rancho Blvd. Suite 8, Carmel, CA 93923
831.372.8328 VOICE
831.359.4173 FAX
www.montereyenergygroup.com
cad@meg4.com

24 TEHAMA
24 TEHAMA
CARMEL, CA. 93923

ENERGY COMPLIANCE

DATE: 12/18/2024
SCALE: AS NOTED
DRAWN: MEG
CHECKED:
CHECKED:
FILE NAME:

SHEET:
T-1
SHEET OF SHEETS

MONTEREY ENERGY GROUP, INC.

FENESTRATION / GLAZING

01	02	03	04	05	06	07	08	09	10	11	12	13	14
Name	Type	Surface	Orientation	Azimuth	Width (ft)	Height (ft)	Mult.	Area (ft^2)	U-factor	U-factor Source	SHGC	SHGC Source	Exterior Shading
D101A	Window	FWall	Front	190	5	11.83	1	59.15	0.39	NFRC	0.28	NFRC	Bug Screen
115B/115C	Window	FWall	Front	190	11.83	10	2	236.6	0.39	NFRC	0.28	NFRC	Bug Screen
107B	Window	LWall	Left	280			1	114.2	0.39	NFRC	0.28	NFRC	Bug Screen
114A	Window	LWall	Left	280	10	10	1	100	0.39	NFRC	0.28	NFRC	Bug Screen
D114A	Window	LWall	Left	280	3.5	9.67	1	33.84	0.39	NFRC	0.28	NFRC	Bug Screen
113A	Window	LWall	Left	280	9	10	1	90	0.39	NFRC	0.28	NFRC	Bug Screen
D116C	Window	LWall	Left	280	2.58	7.67	1	19.79	0.39	NFRC	0.28	NFRC	Bug Screen
116B	Window	LWall	Left	280	14.75	8	1	118	0.39	NFRC	0.28	NFRC	Bug Screen
115D	Window	LWall	Left	280	10.75	10	1	107.5	0.39	NFRC	0.28	NFRC	Bug Screen
116A	Window	BWall	Front	190			1	32	0.39	NFRC	0.28	NFRC	Bug Screen
114B	Window	BWall	Front	190	13.25	10	1	132.5	0.39	NFRC	0.28	NFRC	Bug Screen
101A	Window	BWall	Front	190	36	11.83	1	425.88	0.39	NFRC	0.28	NFRC	Bug Screen
107A	Window	BWall	Front	190	5.5	10	1	55	0.39	NFRC	0.28	NFRC	Bug Screen
D107A	Window	BWall	Front	190	2.67	9.67	1	25.82	0.39	NFRC	0.28	NFRC	Bug Screen
108A	Window	BWall	Front	190	4.83	9.67	1	46.71	0.39	NFRC	0.28	NFRC	Bug Screen
D108A	Window	BWall	Front	190	3	8	1	24	0.39	NFRC	0.28	NFRC	Bug Screen
108B	Window	RWall	Right	100	4.83	9.83	1	47.48	0.39	NFRC	0.28	NFRC	Bug Screen
110A	Window	RWall	Right	100	2.67	4	1	10.68	0.39	NFRC	0.28	NFRC	Bug Screen

NOTICE: This document has been generated by California Home Energy Efficiency Rating Services (CHEERS) using information uploaded by third parties not affiliated with or related to CHEERS. Therefore, CHEERS is not responsible for, and cannot guarantees, the accuracy or completeness of the information contained in this document.

FENESTRATION / GLAZING

01	02	03	04	05	06	07	08	09	10	11	12	13	14
Name	Type	Surface	Orientation	Azimuth	Width (ft)	Height (ft)	Mult.	Area (ft^2)	U-factor	U-factor Source	SHGC	SHGC Source	Exterior Shading
105A	Window	RWall	Right	100	6	4	1	24	0.39	NFRC	0.28	NFRC	Bug Screen
D105A	Window	RWall	Right	100	3	8	1	24	0.39	NFRC	0.28	NFRC	Bug Screen
D115A	Window	RWall	Right	100	3.33	8.42	1	28.04	0.39	NFRC	0.28	NFRC	Bug Screen
115A	Window	RWall	Right	100	7.25	10	1	72.5	0.39	NFRC	0.28	NFRC	Bug Screen
Skylight	Skylight	Flat Roof		0			1	16.4	0.44	NFRC	0.28	NFRC	

OPAQUE DOORS

01	02	03	04
Name	Side of Building	Area (ft^2)	U-factor
D111A	Partition Wall	24	0.5

OVERHANGS AND FINS

01	02	03	04	05	06	07	08	09	10	11	12	13	14
Window	Overhang					Left Fin				Right Fin			
	Depth	Dist Up	Left Extent	Right Extent	Flap Ht.	Depth	Top Up	Dist L	Bot Up	Depth	Top Up	Dist R	Bot Up
101B/101C	15.8	0	0	0	0	0	0	0	0	0	0	0	0
D101A	15.8	0	0	0	0	0	0	0	0	0	0	0	0
115B/115C	5	0	0	0	0	0	0	0	0	0	0	0	0
114A	4.8	0	0	0	0	0	0	0	0	0	0	0	0
D114A	4.8	0	0	0	0	0	0	0	0	0	0	0	0

NOTICE: This document has been generated by California Home Energy Efficiency Rating Services (CHEERS) using information uploaded by third parties not affiliated with or related to CHEERS. Therefore, CHEERS is not responsible for, and cannot guarantees, the accuracy or completeness of the information contained in this document.

OVERHANGS AND FINS

01	02	03	04	05	06	07	08	09	10	11	12	13	14
Window	Overhang					Left Fin				Right Fin			
	Depth	Dist Up	Left Extent	Right Extent	Flap Ht.	Depth	Top Up	Dist L	Bot Up	Depth	Top Up	Dist R	Bot Up
113A	3.6	0	0	0	0	0	0	0	0	0	0	0	0
D116C	3.3	2	0	0	0	0	0	0	0	0	0	0	0
116B	3.3	2	0	0	0	0	0	0	0	0	0	0	0
115D	1.8	0	0	0	0	0	0	0	0	0	0	0	0
114B	3	0	0	0	0	0	0	0	0	0	0	0	0
101A	4.8	0	0	0	0	0	0	0	0	0	0	0	0
107A	15.1	0	0	0	0	0	0	0	0	0	0	0	0
D107A	15.1	0	0	0	0	0	0	0	0	0	0	0	0
108A	3	0.3	0	0	0	0	0	0	0	0	0	0	0
D108A	3	0.3	0	0	0	0	0	0	0	0	0	0	0
108B	3	0.3	0	0	0	0	0	0	0	0	0	0	0
110A	3	2	0	0	0	0	0	0	0	0	0	0	0
105A	3	2	0	0	0	0	0	0	0	0	0	0	0
D105A	3	2	0	0	0	0	0	0	0	0	0	0	0
D115A	2	0	0	0	0	0	0	0	0	0	0	0	0
115A	2	0	0	0	0	0	0	0	0	0	0	0	0

NOTICE: This document has been generated by California Home Energy Efficiency Rating Services (CHEERS) using information uploaded by third parties not affiliated with or related to CHEERS. Therefore, CHEERS is not responsible for, and cannot guarantees, the accuracy or completeness of the information contained in this document.

SLAB FLOORS

01	02	03	04	05	06	07	08
Name	Zone	Area (ft^2)	Perimeter (ft)	Edge Insul. R-value and Depth	Edge Insul. R-value and Depth	Carpeted Fraction	Heated
Slab-on-Grade	Entire House	3737	423.7	none	0	80%	No
Slab-on-Grade2	__Garage__	768	33.5	none	0	0%	No

OPAQUE SURFACE CONSTRUCTIONS

01	02	03	04	05	06	07	08
Construction Name	Surface Type	Construction Type	Framing	Total Cavity R-value	Interior / Exterior Continuous R-value	U-factor	Assembly Layers
R-21 Wall	Exterior Walls	Wood Framed Wall	2x6 @ 16 in. O. C.	R-21	None / None	0.069	Inside Finish: Gypsum Board Cavity / Frame: R-21 / 2x6 Exterior Finish: 3 Coat Stucco
Flat R-30 Roof + R-10	Cathedral Ceilings	Wood Framed Ceiling	2x10 @ 16 in. O. C.	R-30	None / 10	0.026	Roofing: 5 PSF (Normal Gravel) Above Deck Insulation: R-10 Sheathing Roof Deck: Wood Siding/sheathing/decking Cavity / Frame: R-30 / 2x10 Inside Finish: Gypsum Board
R-21 Wall1	Interior Walls	Wood Framed Wall	2x6 @ 16 in. O. C.	R-21	None / None	0.064	Inside Finish: Gypsum Board Cavity / Frame: R-21 / 2x6 Other Side Finish: Gypsum Board

BUILDING ENVELOPE - HERS VERIFICATION

01	02	03	04	05
Quality Insulation Installation (QII)	High R-value Spray Foam Insulation	Building Envelope Air Leakage	CFM50	CFM50
Not Required	Not Required	N/A	n/a	n/a

NOTICE: This document has been generated by California Home Energy Efficiency Rating Services (CHEERS) using information uploaded by third parties not affiliated with or related to CHEERS. Therefore, CHEERS is not responsible for, and cannot guarantees, the accuracy or completeness of the information contained in this document.

WATER HEATING SYSTEMS

01	02	03	04	05	06	07	08	09
Name	System Type	Distribution Type	Water Heater Name	Number of Units	Solar Heating System	Compact Distribution	HERS Verification	Water Heater Name (#)
DHW Sys 1	Domestic Hot Water (DHW)	Demand Recirculation Manual Control	DHW Heater 1	1	n/a	None	n/a	DHW Heater 1 (1)

WATER HEATERS

01	02	03	04	05	06	07	08	09	10	11	12	13
Name	Heating Element Type	Tank Type	# of Units	Tank Vol. (gal)	Heating Efficiency Type	Efficiency	Rated Input Type	Input Rating or Pilot	Tank Insulation R-value (Int/Ext)	Standby Loss or Recovery Eff	1st Hr. Rating or Flow Rate	Tank Location
DHW Heater 1	Gas	Consumer Instantaneous	1	0	UEF	0.96	Btu/Hr	200000	0	n/a	n/a	

WATER HEATING - HERS VERIFICATION

01	02	03	04	05	06	07
Name	Pipe Insulation	Parallel Piping	Compact Distribution	Compact Distribution Type	Recirculation Control	Shower Drain Water Heat Recovery
DHW Sys 1 - 1/1	Not Required	Not Required	Not Required	None	Not Required	Not Required

SPACE CONDITIONING SYSTEMS

01	02	03	04	05	06	07	08	09
Name	System Type	Heating Unit Name	Heating Equipment Count	Cooling Unit Name	Cooling Equipment Count	Fan Name	Distribution Name	Required Thermostat Type
Radiant Heating + A/C1	Heat pump heating cooling	Heat Pump System 1	3	Heat Pump System 1	3	HVAC Fan 1	Air Distribution System 1	Setback

NOTICE: This document has been generated by California Home Energy Efficiency Rating Services (CHEERS) using information uploaded by third parties not affiliated with or related to CHEERS. Therefore, CHEERS is not responsible for, and cannot guarantees, the accuracy or completeness of the information contained in this document.

HVAC - HEAT PUMPS

01	02	03	04	05	06	07	08	09	10	11	12	13
Name	System Type	Number of Units	Heating				Cooling					HERS Verification
			Heating Efficiency Type	HSPF/HSPF2/COP	Cap 47	Cap 17	Cooling Efficiency Type	SEER/SEER2	EER/EER2/CEER	Zonally Controlled	Compressor Type	
Heat Pump System 1	Air to water HP	3	n/a	n/a	76773	n/a	n/a	n/a	n/a	Not Zonal	Single Speed	Heat Pump System 1-hers-htpump

HVAC HEAT PUMPS - HERS VERIFICATION

01	02	03	04	05	06	07	08	09
Name	Verified Airflow	Airflow Target	Verified EER/EER2	Verified SEER/SEER2	Verified Refrigerant Charge	Verified HSPF/HSPF2	Verified Heating Cap 47	Verified Heating Cap 17
Heat Pump System 1-hers-htpump	Required	350	Not Required	Not Required	No	No	Yes	No

HVAC - DISTRIBUTION SYSTEMS

01	02	03	04	05	06	07	08	09	10	11	12
Name	Type	Design Type	Duct Ins. R-value		Duct Location		Surface Area		Bypass Duct	Duct Leakage	HERS Verification
			Supply	Return	Supply	Return	Supply	Return			
Air Distribution System 1	Conditioned space-entirely	Non-Verified	R-6	R-6	Conditioned Zone	Conditioned Zone	n/a	n/a	No Bypass Duct	Sealed and Tested	Air Distribution System 1-hers-dist

NOTICE: This document has been generated by California Home Energy Efficiency Rating Services (CHEERS) using information uploaded by third parties not affiliated with or related to CHEERS. Therefore, CHEERS is not responsible for, and cannot guarantees, the accuracy or completeness of the information contained in this document.

THE USE OF THESE DRAWINGS AND SPECIFICATIONS IS RESTRICTED TO THE ORIGINAL SITE FOR WHICH THEY WERE PREPARED. PUBLICATION THEREOF IS EXPRESSLY LIMITED TO SUCH USE. REPRODUCTION OR PUBLICATION BY ANY MEANS, IN WHOLE OR IN PART, IS PROHIBITED. TITLE TO THESE DRAWINGS AND SPECIFICATIONS REMAINS WITH THE ENGINEER WITHOUT PREJUDICE. VISUAL CONTACT WITH THESE DRAWINGS AND SPECIFICATIONS SHALL CONSTITUTE PRIMA FACIA EVIDENCE OF THE ACCEPTANCE OF THESE RESTRICTIONS

REVISIONS:	BY:

MONTEREY ENERGY GROUP
Consulting Mechanical Engineering
26465 Carmel Rancho Blvd. Suite 8, Carmel, CA. 93923
831.372.8328 VOICE
831.359.4173 FAX
www.montereyenergygroup.com
cad@meg4.com

24 TEHAMA

24 TEHAMA
CARMEL, CA. 93923

ENERGY COMPLIANCE

DATE: 12/18/2024
SCALE: AS NOTED
DRAWN: MEG
CHECKED:
CHECKED:
FILE NAME:
SHEET: T-2
SHEET OF SHEETS

HVAC DISTRIBUTION - HERS VERIFICATION

01	02	03	04	05	06	07	08	09
Name	Duct Leakage Verification	Duct Leakage Target (%)	Verified Duct Location	Verified Duct Design	Buried Ducts	Deeply Buried Ducts	Low-leakage Air Handler	Low Leakage Ducts Entirely in Conditioned Space
Air Distribution System 1-hers-dist	Yes	5.0	Required	Not Required	Not Required	Credit not taken	Not Required	No

HVAC - FAN SYSTEMS

01	02	03	04
Name	Type	Fan Power (Watts/CFM)	Name
HVAC Fan 1	HVAC Fan	0.58	HVAC Fan 1-hers-fan

HVAC FAN SYSTEMS - HERS VERIFICATION

01	02	03
Name	Verified Fan Watt Draw	Required Fan Efficacy (Watts/CFM)
HVAC Fan 1-hers-fan	Required	0.58

INDOOR AIR QUALITY (IAQ) FANS

01	02	03	04	05	06	07	08	09
Dwelling Unit	Airflow (CFM)	Fan Efficacy (W/CFM)	IAQ Fan Type	Includes Heat/Energy Recovery?	IAQ Recovery Effectiveness - SRE/ASRE	Includes Fault Indicator Display?	HERS Verification	Status
SFam IAQVentRpt 1-1	138	0.702899	Balanced	Yes	75 / 80	Yes	Yes	

PROJECT NOTES

Balanced ventilation system required to meet the state energy code. (2) Panasonic FV-10VE2 modeled for compliance. If substituted provide CFM, Watts and unit efficiency prior to installation.

DOCUMENTATION AUTHOR'S DECLARATION STATEMENT

1. I certify that this Certificate of Compliance documentation is accurate and complete.

Documentation Author Name: Michael Hafner	Documentation Author Signature: Michael Hafner
Company: Monterey Energy Group	Signature Date: 12/17/2024
Address: 26465 Carmel Rancho Blvd. #8	CEA/ HERS Certification Identification (If applicable): R22-18-40041
City/State/Zip: Carmel, CA 93923	Phone: 8313728328

RESPONSIBLE PERSON'S DECLARATION STATEMENT

I certify the following under penalty of perjury, under the laws of the State of California:
1. I am eligible under Division 3 of the Business and Professions Code to accept responsibility for the building design identified on this Certificate of Compliance.
2. I certify that the energy features and performance specifications identified on this Certificate of Compliance conform to the requirements of Title 24, Part 1 and Part 6 of the California Code of Regulations.
3. The building design features or system design features identified on this Certificate of Compliance are consistent with the information provided on other applicable compliance documents, worksheets, calculations, plans and specifications submitted to the enforcement agency for approval with this building permit application.

Responsible Designer Name: Juancarlos Fernandez	Responsible Designer Signature: Juancarlos Fernandez
Company: signum architecture	Date Signed: 12/17/2024
Address: 1675 2nd St	License:
City/State/Zip: Napa, CA 94559	Phone: 7073372297

Digitally signed by California Home Energy Efficiency Rating Services (CHEERS). This digital signature is provided in order to secure the content of this registered document, and in no way implies Registration Provider responsibility for the accuracy of the information.

THE USE OF THESE DRAWINGS AND SPECIFICATIONS IS RESTRICTED TO THE ORIGINAL SITE FOR WHICH THEY WERE PREPARED. PUBLICATION THEREOF IS EXPRESSLY LIMITED TO SUCH USE. REPRODUCTION OR PUBLICATION BY ANY MEANS, IN WHOLE OR IN PART, IS PROHIBITED. TITLE TO THESE DRAWINGS AND SPECIFICATIONS REMAINS WITH THE ENGINEER WITHOUT PREJUDICE. VISUAL CONTACT WITH THESE DRAWINGS AND SPECIFICATIONS SHALL CONSTITUTE PRIMA FACIA EVIDENCE OF THE ACCEPTANCE OF THESE RESTRICTIONS. MONTEREY ENERGY GROUP, INC.

REVISIONS:	BY:

MONTEREY ENERGY GROUP
Consulting Mechanical Engineering
26465 Carmel Rancho Blvd. Suite 8, Carmel, CA 93923
831.372.8328 VOICE
831.359.4173 FAX
www.montereyenergygroup.com
cad@meg4.com

24 TEHAMA

24 TEHAMA
CARMEL, CA. 93923

ENERGY COMPLIANCE

DATE: 12/18/2024
SCALE: AS NOTED
DRAWN: MEG
CHECKED:
CHECKED:
FILE NAME:
SHEET:
T-3
SHEET OF SHEETS

THE USE OF THESE DRAWINGS AND SPECIFICATIONS IS RESTRICTED TO THE ORIGINAL SITE FOR WHICH THEY WERE PREPARED. PUBLICATION THEREOF IS EXPRESSLY LIMITED TO SUCH USE. REPRODUCTION OR PUBLICATION BY ANY MEANS, IN WHOLE OR IN PART, IS PROHIBITED. TITLE TO THESE DRAWINGS AND SPECIFICATIONS REMAINS WITH THE ENGINEER WITHOUT PREJUDICE. VISUAL CONTACT WITH THESE DRAWINGS AND SPECIFICATIONS SHALL CONSTITUTE PRIMA FACIE EVIDENCE OF THE ACCEPTANCE OF THESE RESTRICTIONS.
MONTEREY ENERGY GROUP, INC.

2022 Single-Family Residential Mandatory Requirements Summary

NOTE: Single-family residential buildings subject to the Energy Codes must comply with all applicable mandatory measures, regardless of the compliance approach used. Review the respective section for more information.
(04/2022)

Building Envelope:

§ 110.6(a)1:	**Air Leakage.** Manufactured fenestration, exterior doors, and exterior pet doors must limit air leakage to 0.3 CFM per square foot or less when tested per NFRC-400, ASTM E283, or AAMA/WDMA/CSA 101/I.S.2/A440-2011. *
§ 110.6(a)5:	**Labeling.** Fenestration products and exterior doors must have a label meeting the requirements of § 10-111(a).
§ 110.6(b):	**Field fabricated exterior doors and fenestration** products must use U-factors and solar heat gain coefficient (SHGC) values from Tables 110.6-A, 110.6-B, or JA4.5 for exterior doors. They must be caulked and/or weather-stripped. *
§ 110.7:	**Air Leakage.** All joints, penetrations, and other openings in the building envelope that are potential sources of air leakage must be caulked, gasketed, or weather stripped.
§ 110.8(a):	**Insulation Certification by Manufacturers.** Insulation must be certified by the Department of Consumer Affairs, Bureau of Household Goods and Services (BHGS).
§ 110.8(g):	**Insulation Requirements for Heated Slab Floors.** Heated slab floors must be insulated per the requirements of § 110.8(g).
§ 110.8(i):	**Roofing Products Solar Reflectance and Thermal Emittance.** The thermal emittance and aged solar reflectance values of the roofing material must meet the requirements of § 110.8(i) and be labeled per §10-113 when the installation of a cool roof is specified on the CF1R.
§ 110.8(j):	**Radiant Barrier.** When required, radiant barriers must have an emittance of 0.05 or less and be certified to the Department of Consumer Affairs.
§ 150.0(a):	**Roof Deck, Ceiling and Rafter Roof Insulation.** Roof decks in newly constructed attics in climate zones 4 and 8-16 area-weighted average U-factor not exceeding U-0.184. Ceiling and rafter roofs minimum R-22 insulation in wood-frame ceiling; or area-weighted average U-factor must not exceed 0.043. Rafter roof alterations minimum R-19 or area-weighted average U-factor of 0.054 or less. Attic access doors must have permanently attached insulation using adhesive or mechanical fasteners. The attic access must be gasketed to prevent air leakage. Insulation must be installed in direct contact with a roof or ceiling which is sealed to limit infiltration and exfiltration, as specified in § 110.7, including but not limited to placing insulation either above or below the roof deck or on top of a drywall ceiling. *
§ 150.0(b):	**Loose-fill Insulation.** Loose fill insulation must meet the manufacturer's required density for the labeled R-value.
§ 150.0(c):	**Wall Insulation.** Minimum R-13 insulation in 2x4 inch wood framing wall or have a U-factor of 0.102 or less, or R-20 in 2x6 inch wood framing or have a U-factor of 0.071 or less. Opaque non-framed assemblies must have an overall assembly U-factor not exceeding 0.102. Masonry walls must meet Tables 150.1-A or B. *
§ 150.0(d):	**Raised-floor Insulation.** Minimum R-19 insulation in raised wood framed floor or 0.037 maximum U-factor. *
§ 150.0(f):	**Slab Edge Insulation.** Slab edge insulation must meet all of the following: have a water absorption rate, for the insulation material alone without facings, no greater than 0.3 percent; have a water vapor permeance no greater than 2.0 perm per inch; be protected from physical damage and UV light deterioration; and, when installed as part of a heated slab floor, meet the requirements of § 110.8(g).
§ 150.0(g)1:	**Vapor Retarder.** In climate zones 1 through 16, the earth floor of unvented crawl space must be covered with a Class I or Class II vapor retarder. This requirement also applies to controlled ventilation crawl space for buildings complying with the exception to §150.0(d).
§ 150.0(g)2:	**Vapor Retarder.** In climate zones 14 and 16, a Class I or Class II vapor retarder must be installed on the conditioned space side of all insulation in all exterior walls, vented attics, and unvented attics with air-permeable insulation.
§ 150.0(q):	**Fenestration Products.** Fenestration, including skylights, separating conditioned space from unconditioned space or outdoors must have a maximum U-factor of 0.45; or area-weighted average U-factor of all fenestration must not exceed 0.45.

Fireplaces, Decorative Gas Appliances, and Gas Log:

§ 110.5(e)	**Pilot Light.** Continuously burning pilot lights are not allowed for indoor and outdoor fireplaces.
§ 150.0(e)1:	**Closable Doors.** Masonry or factory-built fireplaces must have a closable metal or glass door covering the entire opening of the firebox.
§ 150.0(e)2:	**Combustion Intake.** Masonry or factory-built fireplaces must have a combustion outside air intake, which is at least six square inches in area and is equipped with a readily accessible, operable, and tight-fitting damper or combustion-air control device. *
§ 150.0(e)3:	**Flue Damper.** Masonry or factory-built fireplaces must have a flue damper with a readily accessible control. *

Space Conditioning, Water Heating, and Plumbing System:

§ 110.0-§ 110.3:	**Certification.** Heating, ventilation, and air conditioning (HVAC) equipment, water heaters, showerheads, faucets, and all other regulated appliances must be certified by the manufacturer to the California Energy Commission. *
§ 110.2(a):	**HVAC Efficiency.** Equipment must meet the applicable efficiency requirements in Table 110.2-A through Table 110.2-N. *
§ 110.2(b):	**Controls for Heat Pumps with Supplementary Electric Resistance Heaters.** Heat pumps with supplementary electric resistance heaters must have controls that prevent supplementary heater operation when the heating load can be met by the heat pump alone; and in which the cut-on temperature for compression heating is higher than the cut-on temperature for supplementary heating, and the cut-off temperature for compression heating is higher than the cut-off temperature for supplementary heating.
§ 110.2(c):	**Thermostats.** All heating or cooling systems not controlled by a central energy management control system (EMCS) must have a setback thermostat. *
§ 110.3(c)3:	**Insulation.** Unfired service water heater storage tanks and solar water-heating backup tanks must have adequate insulation, or tank surface heat loss rating.
§ 110.3(c)6:	**Isolation Valves.** Instantaneous water heaters with an input rating greater than 6.8 kBtu per hour (2 kW) must have isolation valves with hose bibbs or other fittings on both cold and hot water lines to allow for flushing the water heater when the valves are closed.

5/6/22

2022 Single-Family Residential Mandatory Requirements Summary

§ 110.5:	**Pilot Lights.** Continuously burning pilot lights are prohibited for natural gas: fan-type central furnaces; household cooking appliances (except appliances without an electrical supply voltage connection with pilot lights that consume less than 150 Btu per hour); and pool and spa heaters. *
§ 150.0(h)1:	**Building Cooling and Heating Loads.** Heating and/or cooling loads are calculated in accordance with the ASHRAE Handbook, Equipment Volume, Applications Volume, and Fundamentals Volume; the SMACNA Residential Comfort System Installation Standards Manual; or the ACCA Manual J using design conditions specified in § 150.0(h)2.
§ 150.0(h)3A:	**Clearances.** Air conditioner and heat pump outdoor condensing units must have a clearance of at least five feet from the outlet of any dryer.
§ 150.0(h)3B:	**Liquid Line Drier.** Air conditioners and heat pump systems must be equipped with liquid line filter driers if required, as specified by the manufacturer's instructions.
§ 150.0(j)1:	**Water Piping, Solar Water-heating System Piping, and Space Conditioning System Line Insulation.** All domestic hot water piping must be insulated as specified in § 609.11 of the California Plumbing Code. *
§ 150.0(j)2:	**Insulation Protection.** Piping insulation must be protected from damage, including that due to sunlight, moisture, equipment' maintenance, and wind as required by §120.3(b). Insulation exposed to weather must be water retardant and protected from UV light (no adhesive tapes). Insulation covering chilled water piping and refrigerant suction piping located outside the conditioned space must include, or be protected by, a Class I or Class II vapor retarder. Pipe insulation buried below grade must be installed in a waterproof and non-crushable casing or sleeve.
§ 150.0(n)1:	**Gas or Propane Water Heating Systems.** Systems using gas or propane water heaters to serve individual dwelling units must designate a space at least 2.5' x 2.5' x 7' suitable for the future installation of a heat pump water heater, and meet electrical and plumbing requirements, based on the distance between this designated space and the water heater location; and a condensate drain no more than 2" higher than the base of the water heater
§ 150.0(n)3:	**Solar Water-heating Systems.** Solar water-heating systems and collectors must be certified and rated by the Solar Rating and Certification Corporation (SRCC), the International Association of Plumbing and Mechanical Officials, Research and Testing (IAPMO R&T), or by a listing agency that is approved by the executive director.

Ducts and Fans:

§ 110.8(d)3:	**Ducts.** Insulation installed on an existing space-conditioning duct must comply with § 604.0 of the California Mechanical Code (CMC). If a contractor installs the insulation, the contractor must certify to the customer, in writing, that the insulation meets this requirement.
§ 150.0(m)1:	**CMC Compliance.** All air-distribution system ducts and plenums must meet CMC §§ 601.0-605.0 and ANSI/SMACNA-006-2006 HVAC Duct Construction Standards Metal and Flexible 3rd Edition. Portions of supply-air and return-air ducts and plenums must be insulated to R-6.0 or higher; ducts located entirely in conditioned space as confirmed through field verification and diagnostic testing (RA3.1.4.3.8) do not require insulation. Connections of metal ducts and inner core of flexible ducts must be mechanically fastened. Openings must be sealed with mastic, tape, or other duct-closure system that meets the applicable UL requirements, or aerosol sealant that meets UL 723. The combination of mastic and either mesh or tape must be used to seal openings greater than ¼", if mastic or tape is used. Building cavities, air handler support platforms, and plenums designed or constructed with materials other than sealed sheet metal, duct board or flexible duct must not be used to convey conditioned air. Building cavities and support platforms may contain ducts; ducts installed in these spaces must not be compressed. *
§ 150.0(m)2:	**Factory-Fabricated Duct Systems.** Factory-fabricated duct systems must comply with applicable requirements for duct construction, connections, and closures; joints and seams of duct systems and their components must not be sealed with cloth back rubber adhesive duct tapes unless such tape is used in combination with mastic and draw bands.
§ 150.0(m)3:	**Field-Fabricated Duct Systems.** Field-fabricated duct systems must comply with applicable requirements for: pressure-sensitive tapes, mastics, sealants, and other requirements specified for duct construction.
§ 150.0(m)7:	**Backdraft Damper.** Fan systems that exchange air between the conditioned space and outdoors must have backdraft or automatic dampers.
§ 150.0(m)8:	**Gravity Ventilation Dampers.** Gravity ventilating systems serving conditioned space must have either automatic or readily accessible, manually operated dampers in all openings to the outside, except combustion inlet and outlet air openings and elevator shaft vents.
§ 150.0(m)9:	**Protection of Insulation.** Insulation must be protected from damage due tosunlight, moisture, equipment maintenance, and wind. Insulation exposed to weather must be suitable for outdoor service (e.g., protected by aluminum, sheet metal, painted canvas, or plastic cover). Cellular foam insulation must be protected as above or painted with a water retardant and solar radiation-resistant coating.
§ 150.0(m)10:	**Porous Inner Core Flex Duct.** Porous inner cores of flex ducts must have a non-porous layer or air barrier between the inner core and outer vapor barrier.
§ 150.0(m)11:	**Duct System Sealing and Leakage Test.** When space conditioning systems use forced air duct systems to supply conditioned air to an occupiable space, the ducts must be sealed and duct leakage tested, as confirmed through field verification and diagnostic testing, in accordance with Reference Residential Appendix RA3.1.
§ 150.0(m)12:	**Air Filtration.** Space conditioning systems with ducts exceeding 10 feet and the supply side of ventilation systems must have MERV 13 or equivalent filters. Filters for space conditioning systems must have a two inch depth or can be one inch if sized per Equation 150.0-A. Clean-filter pressure drop and labeling must meet the requirements in §150.0(m)12. Filters must be accessible for regular service. Filter racks or grilles must use gaskets, sealing, or other means to close gaps around the inserted filters to and prevents air from bypassing the filter. *

5/6/22

2022 Single-Family Residential Mandatory Requirements Summary

§ 150.0(k)1G:	**Screw based luminaires.** Screw based luminaires must contain lamps that comply with Reference Joint Appendix JA8. *
§ 150.0(k)1H:	**Light Sources in Enclosed or Recessed Luminaires.** Lamps and other separable light sources that are not compliant with the JA8 elevated temperature requirements, including marking requirements, must not be installed in enclosed or recessed luminaires.
§ 150.0(k)1I:	**Light Sources in Drawers, Cabinets, and Linen Closets.** Light sources internal to drawers, cabinetry or linen closets are not required to comply with Table 150.0-A or be controlled by vacancy sensors provided that they are rated to consume no more than 5 watts of power, emit no more than 150 lumens, and are equipped with controls that automatically turn the lighting off when the drawer, cabinet or linen closet is closed.
§ 150.0(k)2A:	**Interior Switches and Controls.** All forward phase cut dimmers used with LED light sources must comply with NEMA SSL 7A.
§ 150.0(k)2B:	**Interior Switches and Controls.** Exhaust fans must be controlled separately from lighting systems. *
§ 150.0(k)2A:	**Accessible Controls.** Lighting must have readily accessible wall-mounted controls that allow the lighting to be manually turned on and off. *
§ 150.0(k)2B:	**Multiple Controls.** Controls must not bypass a dimmer, occupant sensor, or vacancy sensor function if the dimmer or sensor is installed to comply with § 150.0(k).
§ 150.0(k)2C:	**Mandatory Requirements.** Lighting controls must comply with the applicable requirements of § 110.9.
§ 150.0(k)2D:	**Energy Management Control Systems.** An energy management control system (EMCS) may be used to comply with dimming, occupancy, and control requirements if it provides the functionality of the specified control per § 110.9 and the physical controls specified in § 150.0(k)2A.
§ 150.0(k)2E:	**Automatic Shutoff Controls.** In bathrooms, garages, laundry rooms, utility rooms and walk-in closets, at least one installed luminaire must be controlled by an occupancy or vacancy sensor providing automatic-off functionality. Lighting inside drawers and cabinets with opaque fronts or doors must have controls that turn the light off when the drawer or door is closed.
§ 150.0(k)2F:	**Dimmers.** Lighting in habitable spaces (e.g., living rooms, dining rooms, kitchens, and bedrooms) must have readily accessible wall-mounted dimming controls that allow the lighting to be manually adjusted up and down. Forward phase cut dimmers controlling LED light sources in these spaces must comply with NEMA SSL 7A.
§ 150.0(k)2K:	**Independent controls.** Integrated lighting of exhaust fans shall be controlled independently from the fans. Lighting under cabinets or shelves, lighting in display cabinets, and switched outlets must be controlled separately from ceiling-installed lighting.
§ 150.0(k)3A:	**Residential Outdoor Lighting.** For single-family residential buildings, outdoor lighting permanently mounted to a residential building, or to other buildings on the same lot, must have a manual on/off switch and either a photocell and motion sensor or automatic time switch control) or an astronomical time clock. An energy management control system that provides the specified control functionality and meets all applicable requirements may be used to meet these requirements.
§ 150.0(k)4:	**Internally illuminated address signs.** Internally illuminated address signs must either comply with § 140.8 or consume no more than 5 watts of power.
§ 150.0(k)5:	**Residential Garages for Eight or More Vehicles.** Lighting for residential parking garages for eight or more vehicles must comply with the applicable requirements for nonresidential garages in §§ 110.9, 130.0, 130.1, 130.4, 140.6, and 141.0.

Solar Readiness:

§ 110.10(a)1:	**Single-family Residences.** Single-family residences located in subdivisions with 10 or more single-family residences and where the application for a tentative subdivision map for the residences has been deemed complete and approved by the enforcement agency, which do not have a photovoltaic system installed, must comply with the requirements of § 110.10(b)-(e).
§110.10(b)1A:	**Minimum Solar Zone Area.** The solar zone must have a minimum total area as described below. The solar zone must comply with access, pathway, smoke ventilation, and spacing requirements as specified in Title 24, Part 9 or other parts of Title 24 or in any requirements adopted by a local jurisdiction. The solar zone total area must be comprised of areas that have no dimension less than 5 feet and are no less than 80 square feet each for buildings with roof areas less than or equal to 10,000 square feet or no less than 160 square feet each for buildings with roof areas greater than 10,000 square feet. For single-family residences, the solar zone must be located on the roof or overhang of the building and have a total area no less than 250 square feet. *
§ 110.10(b)2:	**Azimuth.** All sections of the solar zone located on steep-sloped roofs must have an azimuth between 90-300° of true north.
§ 110.10(b)3A:	**Shading.** The solar zone must not contain any obstructions, including but not limited to: vents, chimneys, architectural features, and roof mounted equipment.
§ 110.10(b)3B:	**Shading.** Any obstruction located on the roof or any other part of the building that projects above a solar zone must be located at least twice the horizontal distance of the height difference between the highest point of the obstruction and the horizontal projection of the nearest point of the solar zone, measured in the vertical plane. *
§ 110.10(b)4:	**Structural Design Loads on Construction Documents.** For areas of the roof designated as a solar zone, the structural design loads for roof dead load and roof live load must be clearly indicated on the construction documents.
§ 110.10(c):	**Interconnection Pathways.** The construction documents must indicate: a location reserved for inverters and metering equipment and a pathway reserved for routing of conduit from the solar zone to the point of interconnection with the electrical service; and for single-family residences and central water-heating systems, a pathway reserved for routing plumbing from the solar zone to the water-heating system.
§ 110.10(d):	**Documentation.** A copy of the construction documents or a comparable document indicating the information from § 110.10(b)-(c) must be provided to the occupant.
§ 110.10(e)1:	**Main Electrical Service Panel.** The main electrical service panel must have a minimum busbar rating of 200 amps.
§ 110.10(e)2:	**Main Electrical Service Panel.** The main electrical service panel must have a reserved space to allow for the installation of a double pole circuit breaker for a future solar electric installation. The reserved space must be permanently marked as "For Future Solar Electric."

Electric and Energy Storage Ready:

5/6/22

2022 Single-Family Residential Mandatory Requirements Summary

§ 150.0(m)13:	**Space Conditioning System Airflow Rate and Fan Efficacy.** Space conditioning systems that use ducts to supply cooling must have a hole for the placement of a static pressure probe, or a permanently installed static pressure probe in the supply plenum. Airflow must be ≥ 350 CFM per ton of nominal cooling capacity, and an air-handling unit fan efficacy ≤ 0.45 watts per CFM for gas furnace air handlers and ≤ 0.58 watts per CFM for all others. Small duct high velocity systems must provide an airflow ≥ 250 CFM per ton of nominal cooling capacity, and an air-handling unit fan efficacy ≤ 0.62 watts per CFM. Field verification testing is required in accordance with Reference Residential Appendix RA3.3. *

Ventilation and Indoor Air Quality:

§ 150.0(o)1:	**Requirements for Ventilation and Indoor Air Quality**. All dwelling units must meet the requirements of ASHRAE Standard 62.2, Ventilation and Acceptable Indoor Air Quality in Residential Buildings subject to the amendments specified in § 150.0(o)1. *
§ 150.0(o)1B:	**Central Fan Integrated (CFI) Ventilation Systems.** Continuous operation of CFI air handlers is not allowed to provide the whole-dwelling unit ventilation airflow required per §150.0(o)1C. A motorized damper(s) must be installed on the ventilation duct(s) that prevents all airflow through the space conditioning duct system when the damper(s) is closed andcontrolled per §150.0(o)1Biii&iv. CFI ventilation systems must have controls that track outdoor air ventilation run time, and either open or close the motorized damper(s) for compliance with §150.0(o)1C.
§ 150.0(o)1C:	**Whole-Dwelling Unit Mechanical Ventilation for Single-Family Detached and townhouses .** Single-family detached dwelling units, and attached dwelling units not sharing ceilings or floors with other dwelling units, occupiable spaces, public garages, or commercial spaces must have mechanical ventilation airflow specified in § 150.0(o)1Ci-iii.
§ 150.0(o)1G:	**Local Mechanical Exhaust.** Kitchens and bathrooms must have local mechanical exhaust; nonenclosed kitchens must have demand-controlled exhaust system meeting requirements of §150.0(o)1Giii,enclosed kitchens and bathrooms can use demand-controlled or continuous exhaust meeting §150.0(o)1Giii-iv. Airflow must be measured by the installer per §150.0(o)1Gv, and rated for sound per §150.0(o)1Gvi. *
§ 150.0(o)1H&I:	**Airflow Measurement and Sound Ratings of Whole-Dwelling Unit Ventilation Systems.** The airflow required per § 150.0(o)1C must be measured by using a flow hood, flow grid, or other airflow measuring device at the fan's inlet or outlet terminals/grilles per Reference Residential Appendix RA3.7. Whole-Dwelling unit ventilation systems must be rated for sound per ASHRAE 62.2 §7.2 at no less than the minimum airflow rate required by §150.0(o)1C.
§ 150.0(o)2:	**Field Verification and Diagnostic Testing.** Whole-Dwelling Unit ventilation airflow, vented range hood airflow and sound rating, and HRV and ERV fan efficacy must be verified in accordance with Reference Residential Appendix RA3.7. Vented range hoods must be verified per Reference Residential Appendix RA3.7.4.3 to confirm if it is rated by HVI or AHAM to comply with the airflow rates and sound requirements per §150.0(o)1G

Pool and Spa Systems and Equipment:

§ 110.4(a):	**Certification by Manufacturers.** Any pool or spa heating system or equipment must be certified to have all of the following: compliance with the Appliance Efficiency Regulations and listing in MAEDbS; an on-off switch mounted outside of the heater that allows shutting off the heater without adjusting the thermostat setting; a permanent weatherproof plate or card with operating instructions; and must not use electric resistance heating. *
§ 110.4(b)1:	**Piping.** Any pool or spa heating system or equipment must be installed with at least 36 inches of pipe between the filter and the heater, or dedicated suction and return lines, or built-in or built-up connections to allow for future solar heating.
§ 110.4(b)2:	**Covers.** Outdoor pools or spas that have a heat pump or gas heater must have a cover.
§ 110.4(b)3:	**Directional Inlets and Time Switches for Pools.** Pools must have directional inlets that adequately mix the pool water, and a time switch that will allow all pumps to be set or programmed to run only during off-peak electric demand periods.
§ 110.5:	**Pilot Light.** Natural gas pool and spa heaters must not have a continuously burning pilot light.
§ 150.0(p):	**Pool Systems and Equipment Installation.** Residential pool systems or equipment must meet the specified requirements for pump sizing, flow rate, piping, filters, and valves.

Lighting:

§ 110.9:	**Lighting Controls and Components.** All lighting control devices and systems, ballasts, and luminaires must meet the applicable requirements of § 110.9. *
§ 150.0(k)1A:	**Luminaire Efficacy.** All installed luminaires must meet the requirements in Table 150.0-A, except lighting integral to exhaust fans, kitchen range hoods, bath vanity mirrors, and garage door openers; navigation lighting less than 5 watts; and lighting internal to drawers, cabinets, and linen closets with an efficacy of at least 45 lumens per watt.
§ 150.0(k)1B:	**Screw based luminaires.** Screw based luminaires must contain lamps that comply with Reference Joint Appendix JA8. *
§ 150.0(k)1C:	**Recessed Downlight Luminaires in Ceilings.** Luminaires recessed into ceilings must not contain screw based sockets, must be airtight, and must be sealed with a gasket or caulk. California Electrical Code § 410.116 must also be met.
§ 150.0(k)1D:	**Light Sources in Enclosed or Recessed Luminaires.** Lamps and other separable light sources that are not compliant with the JA8 elevated temperature requirements, including marking requirements, must not be installed in enclosed or recessed luminaires.
§ 150.0(k)1E:	**Blank Electrical Boxes.** The number of electrical boxes that are more than five feet above the finished floor and do not contain a luminaire or other device shall be no more than the number of bedrooms. These boxes must be served by a dimmer, vacancy sensor control, low voltage wiring, or fan speed control.
§ 150.0(k)1F:	**Lighting Integral to Exhaust Fans.** Lighting integral to exhaust fans (except when installed by the manufacturer in kitchen exhaust hoods) must meet the applicable requirements of § 150.0(k). *

5/6/22

2022 Single-Family Residential Mandatory Requirements Summary

§ 150.0(s)	**Energy Storage System (ESS) Ready.** All single-family residences must meet all of the following: Either ESS-ready interconnection equipment with backed up capacity of 60 amps or more and four or more ESS supplied branch circuits, or a dedicated raceway from the main service to a subpanel that supplies the branch circuits in § 150.0(s); at least four branch circuits must be identified and have their source collocated at a single panelboard suitable to be supplied by the ESS, with one circuit supplying the refrigerator, one lighting circuit near the primary exit, and one circuit supplying a sleeping room receptacle outlet; main panelboard must have a minimum busbar rating of 225 amps; sufficient space must be reserved to allow future installation of a system isolation equipment/transfer switch within 3' of the main panelboard, with raceways installed between the panelboard and the switch location to allow the connection of backup power source.
§ 150.0(t)	**Heat Pump Space Heater Ready.** Systems using gas or propane furnaces to serve individual dwelling units must include: A dedicated unobstructed 240V branch circuit wiring installed within 3' of the furnace with circuit conductors rated at least 30 amps with the blank cover identified as "240V ready;" and a reserved main electrical service panel space to allow for the installation of a double pole circuit breaker permanently marked as "For Future 240V use."
§ 150.0(u)	**Electric Cooktop Ready.** Systems using gas or propane cooktop to serve individual dwelling units must include: A dedicated unobstructed 240V branch circuit wiring installed within 3' of the cooktop with circuit conductors rated at least 50 amps with the blank cover identified as "240V ready;" and a reserved main electrical service panel space to allow for the installation of a double pole circuit breaker permanently marked as "For Future 240V use."
§ 150.0(v)	**Electric Clothes Dryer Ready.** Clothes dryer locations with gas or propane plumbing to serve individual dwelling units must include: A dedicated unobstructed 240V branch circuit wiring installed within 3' of the dryer location with circuit conductors rated at least 30 amps with the blank cover identified as "240V ready;" and a reserved main electrical service panel space to allow for the installation of a double pole circuit breaker permanently marked as "For Future 240V use."

*Exceptions may apply.

5/6/22

MONTEREY ENERGY GROUP
Consulting Mechanical Engineering
26465 Carmel Rancho Blvd. Suite 8, Carmel, CA. 93923
831.372.8328 VOICE
831.369.4173 FAX
www.montereyenergygroup.com
call@meg4.com

REVISIONS: | BY:

24 TEHAMA

24 TEHAMA
CARMEL, CA. 93923

2022 LOW-RISE
RESIDENTIAL MANDATORY
MEASURES SUMMARY

DATE: 12/18/2024
SCALE: AS NOTED
DRAWN: MEG
CHECKED:
CHECKED:
FILE NAME:
SHEET: T-4
SHEET OF SHEETS

GRADING, DRAINAGE, & EROSION CONTROL PLANS

GENERAL NOTES

1. ALL WORK SHALL BE COMPLETED IN ACCORDANCE WITH THESE PLANS AND SPECIFICATIONS HERE ON. IN ADDITION ALL WORK SHALL ALSO COMPLY WITH TITLE 24 AND 2022 CALIFORNIA BUILDING CODE, CALIFORNIA MECHANICAL CODE, CALIFORNIA PLUMBING CODE, CALIFORNIA RESIDENTIAL CODE, CALIFORNIA ELECTRICAL CODE, AND THE CALIFORNIA ENERGY CODE AS THEY MAY APPLY.
2. THE CONTRACTOR SHALL NOTIFY THE ENGINEER AND THE MONTEREY COUNTY PLANNING AND BUILDING INSPECTION DEPARTMENT AT LEAST 24 HOURS PRIOR TO THE START OF CONSTRUCTION.
3. THE CONTRACTOR SHALL FAMILIARIZE HIMSELF WITH THE PLANS, DETAILS, SPECIFICATIONS AND SITE CONDITIONS PRIOR TO THE START OF CONSTRUCTION.
4. IN THE EVENT THAT THE CONTRACTOR FINDS A CONFLICT OR A DEFICIENCY IN THE PLANS, THE CONTRACTOR SHALL NOTIFY THE ENGINEER, THE OWNER, AND OR THE OWNER'S REPRESENTATIVE(S) IMMEDIATELY.
5. ALL REVISIONS TO THESE PLANS MUST BE APPROVED BY THE ENGINEER PRIOR TO THEIR CONSTRUCTION, AND SHALL BE ACCURATELY SHOWN ON DRAWINGS PRIOR TO THE ACCEPTANCE OF THE WORK AS COMPLETE. ANY CHANGES TO OR DEVIATIONS FROM THE PLANS MADE WITHOUT AUTHORIZATION SHALL BE AT THE CONTRACTOR'S SOLE RISK AND SHALL ABSOLVE THE ENGINEER OF ANY AND ALL RESPONSIBILITY ASSOCIATED WITH THE THE CHANGE OR DEVIATION.
6. THE ENGINEER ASSUMES NO RESPONSIBILITY FOR THE ACCURACY OF THE EXISTING TOPOGRAPHY SHOWN, NOR THE ACCURACY OF THE DELINEATION OF SAID UNDERGROUND UTILITIES, NOR FOR THE EXISTENCE OF OTHER BURIED OBJECTS OR UTILITIES WHICH MAY BE ENCOUNTERED AND ARE NOT SHOWN ON THESE PLANS. THE CONTRACTOR IS HEREBY NOTIFIED THAT, PRIOR TO COMMENCING CONSTRUCTION HE IS RESPONSIBLE FOR CONTACTING THE UTILITY COMPANIES INVOLVED AND REQUESTING A VISUAL VERIFICATION OF THEIR UNDERGROUND UTILITIES AND OR FACILITIES. REPAIR OF DAMAGE TO ANY UNDERGROUND UTILITY OR FACILITY SHALL BE MADE AT THE CONTRACTORS EXPENSE.
7. THE CONTRACTOR SHALL NOTIFY UNDERGROUND SERVICE ALERT AT (800) 642-2444 AT LEAST 48 HOURS PRIOR TO THE START OF WORK TO VERIFY THE LOCATION OF EXISTING UNDERGROUND UTILITIES.
8. THE CONTRACTOR SHALL LEAVE A 24-HOUR EMERGENCY TELEPHONE NUMBER WITH THE SHERIFF, FIRE DEPARTMENT, AND PRIVATE SECURITY COMPANY (IF APPLICABLE), AND KEEP THEM INFORMED DAILY REGARDING ANY CONSTRUCTION RELATED ACTIVITY IN THE PUBLIC RIGHT-OF-WAY.
9. EXISTING CURB, GUTTER, SIDEWALK, SURVEY MONUMENTS, AND OTHER IMPROVEMENTS WITHIN PROJECT SITE THAT ARE DAMAGED OR DISPLACED SHALL BE REPLACED AS DIRECTED BY THE COUNTY AND OR THE ENGINEER AT THE CONTRACTOR'S EXPENSE WHETHER SHOWN ON THE PLANS OR NOT, EVEN IF DAMAGE OR DISPLACEMENT WAS NOT CAUSED BY ACTUAL WORK PERFORMED BY THE CONTRACTOR.
10. THE CONTRACTOR SHALL ADJUST TO FINAL GRADE ALL MANHOLES, VALVE AND MONUMENT COVERS WITHIN THE WORK AREA UNLESS NOTED OTHERWISE.
11. THE CONTRACTOR ASSUMES SOLE AND COMPLETE RESPONSIBILITY FOR THE JOB SITE CONDITIONS AND SAFETY OF ALL PERSONS AND PROPERTY DURING THE COURSE OF CONSTRUCTION OF THE PROJECT AND SHALL HOLD HARMLESS, INDEMNIFY AND DEFEND THE OWNER AND THE ENGINEER FROM ANY AND ALL LIABILITY, CLAIMS, LOSSES OR DAMAGES ARISING FROM THE PERFORMANCE OF THE WORK DESCRIBED HEREIN EXCEPT THOSE ARISING FROM THE SOLE NEGLIGENCE OF ANY OF THE PREVIOUSLY MENTIONED PEOPLE OR ENTITIES. THIS REQUIREMENT SHALL BE MADE TO APPLY CONTINUOUSLY AND NOT BE LIMITED TO NORMAL WORKING HOURS.
12. THE CONTRACTOR SHALL TAKE ALL NECESSARY MEASURES TO PREVENT AIRBORNE DUST FROM BECOMING A NUISANCE TO NEIGHBORING PROPERTIES. THE CONTRACTOR SHALL CONFORM TO THE STANDARDS FOR DUST-CONTROL AS ESTABLISHED BY THE AIR QUALITY MAINTENANCE DISTRICT. DUST CONTROL MEASURES TO BE IMPLEMENTED INCLUDE BUT ARE NOT LIMITED TO THE FOLLOWING:
A) PROVIDE EQUIPMENT AND MANPOWER REQUIRED FOR WATERING ALL EXPOSED OR DISTURBED EARTH.
B) COVER STOCKPILES OF DEBRIS, SOIL, OR OTHER MATERIALS WHICH MAY CONTRIBUTE TO AIRBORNE DUST.
C) KEEP CONSTRUCTION AREAS AND ADJACENT STREET FREE OF MUD AND DUST.
D) LANDSCAPE, SEED, OR COVER PORTIONS OF THE SITE AS SOON AS CONSTRUCTION IS COMPLETE.
13. THE CONTRACTOR SHALL TAKE ALL NECESSARY MEASURES TO KEEP STREETS AND ROADS FREE FROM DIRT AND DEBRIS. SHOULD ANY DIRT OR DEBRIS BE DEPOSITED IN THE PUBLIC RIGHT-OF-WAY, THE CONTRACTOR SHALL REMOVE IT IMMEDIATELY.
14. CONTRACTOR SHALL BE RESPONSIBLE FOR REMOVAL, OFF-HAUL, AND PROPER DISPOSAL OF ALL ITEMS TO BE REMOVED INCLUDING BUT NOT LIMITED TO: DEBRIS FROM THE SITE, TREES, ROOT BALLS AND FENCING.
15. ALL CUT AND FILL SLOPES EXPOSED DURING CONSTRUCTION SHALL BE COVERED, SEEDED OR OTHERWISE TREATED TO CONTROL EROSION WITHIN 48 HOURS AFTER GRADING. CONTRACTOR SHALL REVEGETATE SLOPES AND ALL DISTURBED AREAS THROUGH AN APPROVED PROCESS AS DETERMINED BY MONTEREY COUNTY PUBLIC WORKS DEPARTMENT. THIS MAY CONSIST OF EFFECTIVE PLANTING OF RYE GRASS, BARLEY OR SOME OTHER FAST GERMINATING SEED.
16. CONSTRUCTION ACTIVITY SHALL BE RESTRICTED TO THE HOURS OF MONDAY-FRIDAY 8:00 AM TO 5:00 PM.
17. CONSTRUCTION EQUIPMENT SHALL HAVE MUFFLERS IN GOOD CONDITION.
18. CONTRACTOR AND ALL SUBCONTRACTORS ARE RESPONSIBLE FOR COMPLIANCE WITH ANY CURRENTLY APPLICABLE SAFETY LAW OF OF ANY JURISDICTIONAL BODY, FOR INFORMATION REGARDING THIS PROVISION, THE CONTRACTOR IS DIRECTED TO CONTACT STATE OF CALIFORNIA DIVISION OF OCCUPATIONAL SAFETY AND HEALTH, FREMONT, CA. PHONE (510) 794-2521.
19. THE CONTRACTOR SHALL BE RESPONSIBLE FOR ALL BARRICADES, SAFETY DEVICES, AND TRAFFIC CONTROL WITHIN THE CONSTRUCTION AREA.
20. FOR ALL TRENCH EXCAVATIONS FIVE (5) FEET OR MORE IN DEPTH, THE CONTRACTOR SHALL OBTAIN A PERMIT FROM THE DIVISION OF OCCUPATIONAL SAFETY AND HEALTH, 39141 CIVIC CENTER DRIVE, SUITE 310, FREMONT CALIFORNIA 94538, PHONE (510) 794-2521, PRIOR TO ANY EXCAVATION. A COPY OF THIS PERMIT SHALL BE AVAILABLE AT THE CONSTRUCTION SITE AT ALL TIMES.
21. AT COMPLETION OF THE CONSTRUCTION, THE CONTRACTOR SHALL FURNISH REPRODUCIBLE AS-BUILT PLANS TO THE ENGINEER AND THE MONTEREY COUNTY PLANNING AND BUILDING DEPARTMENT. SAID PLANS SHALL SHOW ALL CHANGES AND ADDITIONS/DELETIONS IN RED ON THE REPRODUCIBLE PLANS.
22. PAVEMENT SECTION TO BE DETERMINED AS SHOWN ON THESE PLANS.
23. A SEPERATE PERMIT IS REQUIRED FOR THE CONSTRUCTION OF ALL RETAINING WALLS.
24. TREES WHICH ARE LOCATED CLOSE TO THE CONSTRUCTION SITE SHALL BE PROTECTED FROM INADVERTENT DAMAGE FROM CONSTRUCTION EQUIPMENT BY WRAPPING TRUNKS WITH PROTECTIVE MATERIALS, AVOIDING FILL OF ANY TYPE AGAINST THE BASE OF TRUNKS, AND AVOIDING AN INCREASE IN SOIL DEPTH AT THE FEEDING ZONE OR DRIP LINE OF THE RETAINED TREES.

GRADING NOTES

1. REFER TO GENERAL NOTES AND DETAILS AS SHOWN ON THESE PLANS.
2. ALL GRADING SHALL CONFORM TO THE MONTEREY COUNTY GRADING ORDINANCE #2535, EROSION CONTROL ORDINANCE #2806, THE CALIFORNIA BUILDING CODE AND GEOTECHNICAL REPORT ENTITLED:

"GEOTECHNICAL AND GEOLOGIC INVESTIGATION FOR PROPOSED RESIDENTIAL CONSTRUCTION,
APN 169-421-045, 24 TEHAMA, LOT 10 CARMEL CALIFORNIA"

PREPARED BY: HARO, KASUNICH AND ASSOCIATES, INC.
116 EAST LAKE AVENUE
WATSONVILLE, CA 95076
(831) 722-4175

DATED: DECEMBER 31, 2024

3. ALL GRADING AND COMPACTION SHALL BE DONE IN THE PRESENCE OF AND TESTED BY THE SOILS ENGINEER AND/OR SOILS TESTING CONSULTANT, WHO WILL PROVIDE THE ENGINEER WITH COPIES OF ALL TEST RESULTS. THE CONTRACTOR SHALL SUBMIT TESTS AND REPORT FROM SOILS ENGINEER TO THE MONTEREY COUNTY PLANNING AND BUILDING INSPECTION DEPARTMENT PRIOR TO SCHEDULING ANY INSPECTIONS.
4. IT IS THE CONTRACTOR'S RESPONSIBILITY TO SECURE THE REQUIRED PERMITS PRIOR TO THE COMMENCEMENT OF GRADING. RIGHT-OF-ENTRY, PERMISSION TO GRADE, AND ENCROACHMENT PERMIT(S) MAY BE REQUIRED PRIOR TO GRADING.
5. IT IS THE CONTRACTORS RESPONSIBILITY TO PREPARE THE GROUND SURFACE TO RECEIVE THE FILLS TO THE SATISFACTION OF THE SOIL ENGINEER AND TO PLACE, SPREAD, MIX, WATER, AND COMPACT THE FILL IN ACCORDANCE WITH THE RECOMMENDATIONS OF THE SOILS ENGINEER. THE CONTRACTOR SHALL ALSO REMOVE ALL MATERIAL CONSIDERED UNSATISFACTORY BY THE SOILS ENGINEER.
6. WHERE UNSTABLE OR UNSUITABLE MATERIALS ARE ENCOUNTERED DURING SUBGRADE PREPARATION, THE AREA IN QUESTION SHALL BE OVER EXCAVATED AND REPLACED BY SELECT BACKFILL MATERIAL AS DIRECTED IN THE FIELD BY THE SOILS ENGINEER.
7. ALL CUT AND FILL SLOPE SHALL BE 2:1 OR FLATTER UNLESS OTHERWISE DIRECTED IN WRITING BY THE ENGINEER OR SOILS ENGINEER AND APPROVED BY THE MONTEREY COUNTY PLANNING AND BUILDING INSPECTION DEPARTMENT.
8. ALL CUT SLOPES SHALL BE ROUNDED TO MEET EXISTING GRADES AND BLEND WITH SURROUNDING TOPOGRAPHY. ALL GRADED SLOPES SHALL BE PLANTED WITH SUITABLE GROUND COVER AND LANDSCAPE MAINTENANCE WILL BE REQUIRED UNTIL GROUND COVER IS ESTABLISHED.
9. ELEVATION BENCHMARK: SEE SHEET C2.
10. CONTRACTOR SHALL USE CAUTION WHEN GRADING AROUND AND/OR OVER EXISTING UNDERGROUND UTILITIES.
11. CONTRACTOR SHALL CONDUCT ALL GRADING OPERATIONS IN SUCH A MANNER AS TO PRECLUDE WIND BLOWN DIRT, DUST AND RELATED DAMAGE TO NEIGHBORING PROPERTIES. SUFFICIENT WATERING TO CONTROL DUST IS REQUIRED AT ALL TIMES. CONTRACTOR SHALL ASSUME LIABILITY FOR CLAIMS RELATED TO WIND BLOWN MATERIAL. IF THE DUST CONTROL IS INADEQUATE AS DETERMINED BY THE MONTEREY COUNTY PLANNING AND BUILDING DEPARTMENT OR DESIGNATED REPRESENTATIVE, THE CONSTRUCTION WORK SHALL BE TERMINATED UNTIL CORRECTIVE MEASURES ARE TAKEN.
12. THE SOILS ENGINEER SHALL BE NOTIFIED AT LEAST FOUR (4) DAYS IN ADVANCE OF COMMENCING WORK, INCLUDING SITE STRIPPING AND GRADING OPERATIONS. THIS WORK SHALL BE OBSERVED AND TESTED BY THE SOILS ENGINEER.
13. STRIPINGS TO BE USED AS TOPSOIL SHALL BE STOCKPILED IN APPROVED AREAS FOR FUTURE USE IN LANDSCAPED AREAS.
14. STOP WORK WITHIN 50 METERS (165 FT) OF UNCOVERED RESOURCE AND CONTACT MONTEREY COUNTY HCD-PLANNING AND A QUALIFIED ARCHAEOLOGIST IMMEDIATELY IF CULTURAL, ARCHAEOLOGICAL, HISTORICAL OR PALEONTOLOGICAL RESOURCES ARE UNCOVERED. WHEN CONTACTED, THE PROJECT PLANNER AND THE ARCHAEOLOGIST SHALL IMMEDIATELY VISIT THE SITE TO DETERMINE THE EXTENT OF THE RESOURCES AND TO DEVELOP PROPER MITIGATION MEASURES REQUIRED FOR THE DISCOVERY.
15. ALL HAUL ROADS SHALL BE RETURNED TO ORIGINAL CONDITION AND RESEEDED WHEN GRADING IS COMPLETE. NO HAUL ROADS SHALL BE ALLOWED IN AREAS WHICH ARE NOT SHOWN TO BE GRADED WITHOUT PRIOR APPROVAL OF THE ENGINEER. RESTORATION OF HAUL ROADS WILL BE THE SOLE RESPONSIBILITY OF THE CONTRACTOR.
16. EARTHWORK QUANTITIES ARE SHOWN ON SHEET C4.
17. ALL GRADES TO BE A MINIMUM OF 5% AWAY FROM FOUNDATIONS FOR 10 FEET UNLESS SPECIFIED OTHERWISE ON PLANS.
18. TREE REMOVAL SHALL INCLUDE REMOVAL OF TRUNKS, STUMPS, AND ROOTBALLS. THE REMAINING CAVITY SHALL BE CLEARED OF ALL ROOTS LARGER THAN 3" TO A DEPTH OF NOT LESS THAN 18" AND BACKFILLED WITH SUITABLE MATERIAL THEN COMPACTED TO CONFORM WITH THE EXISTING GROUND.
19. DURING WINTER OPERATIONS (BETWEEN OCTOBER 15 AND APRIL 15), THE FOLLOWING MEASURES MUST BE TAKEN:
A) DISTURBED SURFACES NOT INVOLVED IN THE IMMEDIATE OPERATIONS MUST BE PROTECTED BY MULCHING AND/OR OTHER EFFECTIVE MEANS OF SOIL PROTECTION.
B) ALL ROADS AND DRIVEWAYS SHALL HAVE DRAINAGE FACILITIES SUFFICIENT TO PREVENT EROSION ON OR ADJACENT TO THE ROADWAY OR THE DOWNHILL PROPERTIES.
C) DRAINAGE CONTROL MEASURES SHALL BE MAINTAINED AND IN PLACE AT THE END OF EACH DAY AND CONTINUOUSLY CHECKED THROUGHOUT THE LIFE OF THE PROJECT DURING WINTER OPERATIONS.
(MONTEREY COUNTY GRADING/EROSION ORD. 2806-16.12.090)
20. PAD ELEVATIONS SHALL BE CERTIFIED TO 0.1 FEET, PRIOR TO DIGGING ANY FOOTINGS OR SCHEDULING ANY INSPECTIONS.
21. GROUND SURFACE SHALL BE PREPARED TO RECEIVE FILL BY REMOVING VEGETATION, NON-COMPLYING FILL, TOPSOIL AND OTHER UNSUITABLE MATERIALS SCARIFYING TO PROVIDE A BOND WITH THE NEW FILL, AND WHERE SLOPES ARE STEEPER THAN 5 TO 1, AND THE HEIGHT IS GREATER THAN 5 FT, BY BENCHING INTO SOUND BEDROCK OR OTHER COMPETENT MATERIAL AS DETERMINED BY THE GEOTECHNICAL ENGINEER.
22. NO ORGANIC MATERIAL SHALL BE PERMITTED IN FILLS EXCEPT AS TOPSOIL USED FOR SURFACE PLANT GROWTH ONLY AND WHICH DOES NOT EXCEED 4" IN DEPTH. NO ROCK OR CLODS OVER 4" IN ITS MAXIMUM DIMENSION MAY BE USED IN A FILL.
23. PRIOR TO FINAL INSPECTION, THE GEOTECHNICAL CONSULTANT SHALL PROVIDE CERTIFICATION THAT ALL DEVELOPMENT HAS BEEN CONSTRUCTED IN ACCORDANCE WITH THE GEOTECHNICAL REPORT.
24. ALL FILL SOILS SHALL BE COMPACTED IN ACCORDANCE WITH THE GEOTECHNICAL REPORT.
25. OVER EXCAVATION SHOULD BE CONDUCTED BELOW THE FOUNDATIONS AND FLOOR SLABS IN ACCORDANCE WITH THE RECOMMENDATIONS IN THE GEOTECHNICAL REPORT.
26. A COPY OF ALL FIELD REPORTS/COMPACTION TESTS, AND FINAL GRADING REPORT SHALL BE SUBMITTED TO THE COUNTY AT SCHEDULED INSPECTIONS.

STATEMENT OF PURPOSE

THESE PLANS WERE PRODUCED TO PROVIDE FOR GRADING, DRAINAGE, AND EROSION CONTROL FOR AND DURING THE CONSTRUCTION OF A SINGLE FAMILY RESIDENCE AT 24 TEHAMA IN CARMEL CALIFORNIA 93923

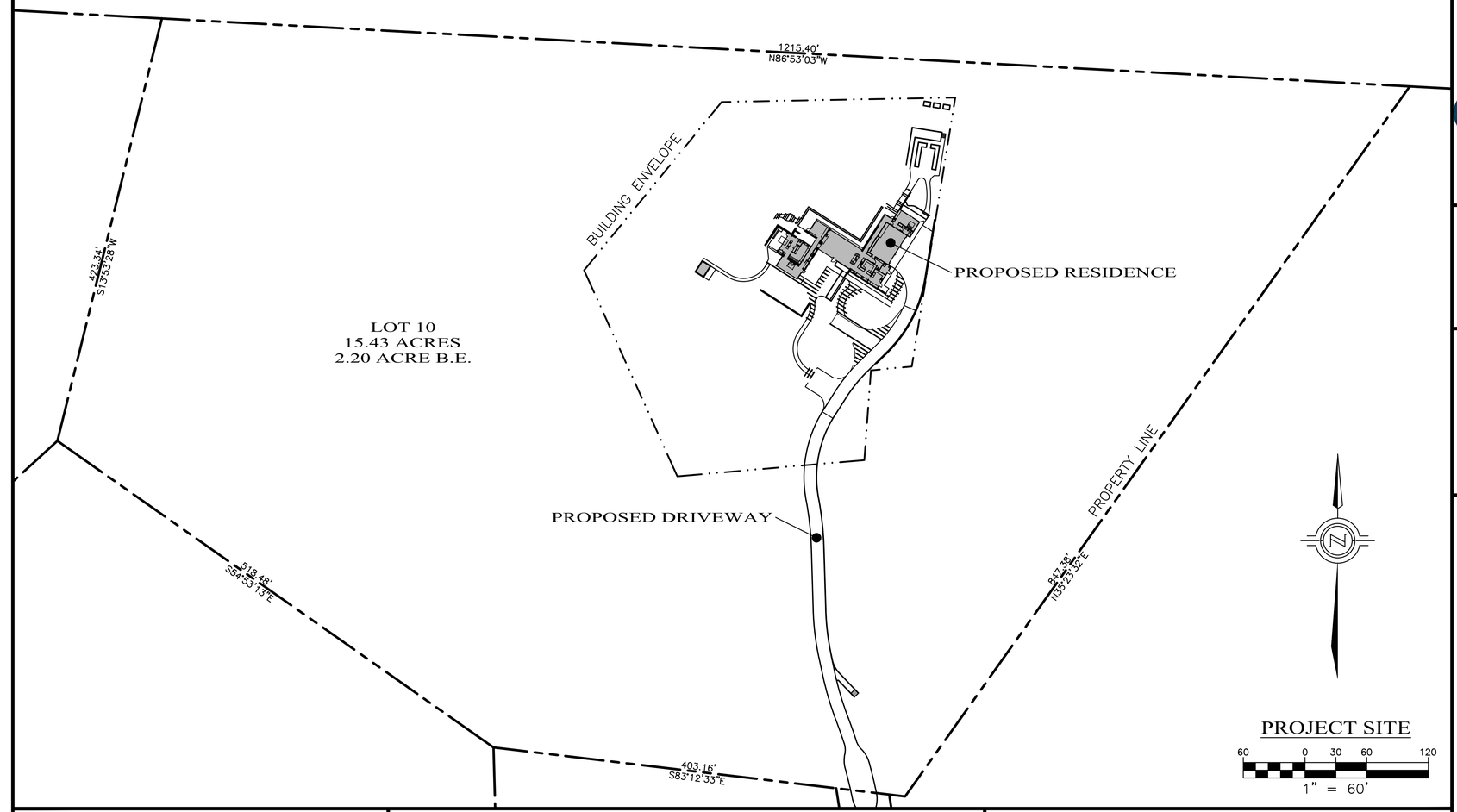

FIRE DEPARTMENT NOTES

1. FIRE007-DRIVEWAYS SHALL NOT BE LESS THAN 12 FT WIDE UNOBSTRUCTED, WITH AN UNOBSTRUCTED VERTICAL CLEARANCE OF NOT LESS THAN 15 FT. THE GRADE FOR ALL DRIVEWAYS SHALL NOT EXCEED 15% (UNLESS APPROVED BY FD). WHERE THE GRADE EXCEEDS 8 PERCENT, A MINIMUM STRUCTURAL ROADWAY SURFACE OF 0.17 FT OF AC ON 0.34 FT OF AB SHALL BE REQUIRED. THE DRIVEWAY SURFACE SHALL BE CAPABLE OF SUPPORTING THE IMPOSED LOAD OF FIRE APPARATUS (22 TONS), AND BE ACCESSIBLE BY CONVENTIONAL-DRIVE VEHICLES, INCLUDING SEDANS. FOR DRIVEWAYS WITH TURNS 90' AND LESS, THE MINIMUM HORIZONTAL INSIDE RADIUS CURVATURE SHALL BE 25 FT. FOR DRIVEWAYS WITH TURNS GREATER THAN 90', THE MINIMUM HORIZONTAL INSIDE RADIUS CURVATURE SHALL BE 28 FT. FOR ALL DRIVEWAY TURNS, AN ADDITIONAL SURFACE OF 4 FT SHALL BE ADDED. TURNAROUNDS SHALL BE REQUIRED ON DRIVEWAYS IN EXCESS OF 150 FT OF SURFACE LENGTH AND SHALL BE LOCATED WITHIN 50 FT OF THE PRIMARY BUILDING. THE MINIMUM TURNING RADIUS FOR A TURNAROUND SHALL BE 40 FT FROM THE CENTER LINE OF THE DRIVEWAY. IF A HAMMERHEAD T IS USED, THE TOP OF THE T SHALL BE A MINIMUM OF 60 FT IN LENGTH, OR AS APPROVED BY THE FIRE CHIEF.
2. FIRE008-ALL GATES PROVIDING ACCESS FROM A ROAD TO A DRIVEWAY SHALL BE LOCATED AT LEAST 30 FT FROM THE ROADWAY AND SHALL OPEN TO ALLOW A VEHICLE TO STOP WITHOUT OBSTRUCTING TRAFFIC ON THE ROAD. GATE ENTRANCES SHALL BE AT LEAST THE WIDTH OF THE TRAFFIC LANE BUT IN NO CASE LESS THAN 12 FT WIDE. WHERE A ONE WAY ROAD WITH A SINGLE TRAFFIC LANE PROVIDES ACCESS TO A GATED ENTRANCE, A 40 FT TURNING RADIUS SHALL BE USED. WHERE GATES ARE TO BE LOCKED, THE INSTALLATION OF A KEY BOX OR OTHER ACCEPTABLE MEANS FOR IMMEDIATE ACCESS BY EMERGENCY EQUIPMENT MAY BE REQUIRED.
3. FIRE011-ALL BUILDINGS SHALL BE ISSUED AN ADDRESS IN ACCORDANCE WITH MONTEREY COUNTY ORDINANCE NO1241. EACH OCCUPANCY, EXCEPT ACCESSORY BUILDINGS, SHALL HAVE ITS OWN PERMANENTLY POSTED ADDRESS. WHEN MULTIPLE OCCUPANCIES EXIST WITHIN A SINGLE BUILDING, EACH INDIVIDUAL OCCUPANCY SHALL BE SEPARATELY IDENTIFIED BY ITS OWN ADDRESS. LETTERS, NUMBERS, AND SYMBOLS FOR ADDRESSES SHALL BE A MINIMUM OF 4 IN HEIGHT, 1/2 IN STROKE, CONTRASTING WITH THE BACKGROUND COLOR OF THE SIGN, AND SHALL BE ARABIC. THE SIGN AND NUMBERS SHALL BE REFLECTIVE AND MADE OF A NONCOMBUSTIBLE MATERIAL. ADDRESS SIGNS SHALL BE PLACED AT EACH DRIVEWAY ENTRANCE AND AT EACH DRIVEWAY SPLIT. ADDRESS SIGNS SHALL BE VISIBLE AND LEGIBLE FROM BOTH DIRECTIONS OF TRAVEL ALONG THE ROAD. IN ALL CASES, THE ADDRESS SHALL BE POSTED AT THE BEGINNING OF CONSTRUCTION AND SHALL BE MAINTAINED THEREAFTER. ADDRESS SIGNS ALONG ONE-WAY ROADS SHALL BE VISIBLE FROM BOTH DIRECTIONS OF TRAVEL. WHERE MULTIPLE ADDRESSES ARE REQUIRED AT A SINGLE DRIVEWAY, THEY SHALL BE MOUNTED ON A SINGLE SIGN. WHERE A ROADWAY PROVIDES ACCESS SOLELY TO A SINGLE COMMERCIAL OCCUPANCY, THE ADDRESS SIGN SHALL BE PLACED AT THE NEAREST ROAD INTERSECTION PROVIDING ACCESS TO THAT SITE. PERMANENT ADDRESS NUMBERS SHALL BE POSTED PRIOR TO REQUESTING FINAL CLEARANCE.
4. FIRE020-REMOVE COMBUSTIBLE VEGETATION FROM WITHIN A MINIMUM OF 100 FT OF STRUCTURES. LIMB TREES 6 FT UP FROM GROUND. REMOVE LIMBS WITHIN 10 FT OF CHIMNEYS. ADDITIONAL FIRE PROTECTION OR FIREBREAK APPROVED BY THE REVIEWING AUTHORITY MAY BE REQUIRED TO PROVIDE REASONABLE FIRE SAFETY. ENVIRONMENTALLY SENSITIVE AREAS MAY REQUIRE ALTERNATIVE FIRE PROTECTION, TO BE DETERMINED BY REVIEWING AUTHORITY AND THE DIRECTOR OF PLANNING AND BUILDING INSPECTION.
5. FIRE022-FIRE PROTECTION EQUIPMENT & SYSTEMS-FIRE SPRINKLER SYSTEM-(HAZARDOUS CONDITIONS). THE BUILDING(S) AND ATTACHED GARAGE(S) SHALL BE FULLY PROTECTED WITH AUTOMATIC FIRE SPRINKLER SYSTEM(S). INSTALLATION SHALL BE IN ACCORDANCE WITH THE APPLICABLE NFPA STANDARD. A MINIMUM OF FOUR (4) SETS OF PLANS FOR FIRE SPRINKLER SYSTEMS MUST BE SUBMITTED BY A CALIFORNIA LICENSED C-16 CONTRACTOR AND APPROVED PRIOR TO INSTALLATION. THIS REQUIREMENT IS NOT INTENDED TO DELAY ISSUANCE OF A BUILDING PERMIT. A ROUGH SPRINKLER INSPECTION MUST BE SCHEDULED BY THE INSTALLING CONTRACTOR AND COMPLETED PRIOR TO REQUESTING A FRAMING INSPECTION. DUE TO SUBSTANDARD ACCESS, OR OTHER MITIGATING FACTORS, SMALL BATHROOM(S) AND OPEN ATTACHED PORCHES, CARPORTS, AND SIMILAR STRUCTURES SHALL BE PROTECTED WITH FIRE SPRINKLERS.

GEOTECHNICAL INSPECTION WITH TIMING OF INSPECTION

DESCRIPTION OF THE REQUIRED INSPECTION:	WHEN INSPECTION IS TO BE COMPLETED:	WHO WILL CONDUCT THE INSPECTION:	INSPECTOR NAME:	COMPLETION DATE:
INSPECT AND TEST KEYWAY/SUBEXCAVATION/OVEREXCAVATION:	1) PRIOR TO BACKFILLING	GEOTECHNICAL ENGINEER		
INSPECT AND TEST KEYWAY/SUBEXCAVATION/OVEREXCAVATION:	2) DURING BACKFILL PLACEMENT – ONGOING	GEOTECHNICAL ENGINEER		
INSPECT AND TEST BUILDING PAD SUBGRADE:	1) PRIOR TO EXCAVATION FOOTINGS OR PLACEMENT OF SLAB-ON-GRADE MATERIALS	GEOTECHNICAL ENGINEER		
INSPECT SLAB-ON-GRADE INSTALLATION:	1) PRIOR TO CONCRETE PLACEMENT	GEOTECHNICAL ENGINEER		
INSPECT FOUNDATION AND/OR RETAINING WALL FOOTING EXCAVATIONS:	1) PRIOR TO REINFORCEMENT PLACEMENT	GEOTECHNICAL ENGINEER		
INSPECT AND TEST RETAINING WALL BACKFILL:	1) DURING BACKFILL PLACEMENT – ONGOING	GEOTECHNICAL ENGINEER		
INSPECT AND TEST DRIVEWAY FILL, SUBGRADE, AND BASEROCK PLACEMENT:	1) DURING FILL PLACEMENT	GEOTECHNICAL ENGINEER		
INSPECT AND TEST DRIVEWAY FILL, SUBGRADE, AND BASEROCK PLACEMENT:	2) SUBGRADE, PRIOR TO BASEROCK PLACEMENT	GEOTECHNICAL ENGINEER		
INSPECT AND TEST DRIVEWAY FILL, SUBGRADE, AND BASEROCK PLACEMENT:	3) BASEROCK PRIOR TO PAVEMENT APPLICATION	GEOTECHNICAL ENGINEER		
INSPECT AND TEST DRAINAGE INSTALLATION:	1) AFTER PIPE PLACEMENT, PRIOR TO BACKFILL PLACEMENT	GEOTECHNICAL ENGINEER		
INSPECT AND TEST DRAINAGE INSTALLATION:	2) DURING BACKFILL PLACEMENT – ONGOING	GEOTECHNICAL ENGINEER		

ABBREVIATIONS

AB	AGGREGATE BASE
AC	ASPHALT CONCRETE
AD	AREA DRAIN
BS	BOTTOM OF STEP
CB	CATCH BASIN
CL	CENTERLINE
DIA	DIAMETER
DWY	DRIVEWAY
E	ELECTRICAL SERVICE
(E)	EXISTING
EC	END CURVE
ELEV	ELEVATION
EP	EDGE OF PAVEMENT
FC	FACE OF CURB
FP	FINISHED PAVEMENT
FF	FINISHED FLOOR ELEVATION
FL	FLOW LINE
G	GAS SERVICE
HDPE	HIGH DENSITY POLYETHYLENE
JT	JOINT UTILITY TRENCH
K	CURVE COEFFICICIENT
LF	LINEAR FEET
MIN	MINIMUM
N/A	NOT APPLICABLE
(N)	NEW
NTS	NOT TO SCALE
PG&E	PACIFIC GAS & ELECTRIC
PVC	POLYVINYL CHLORIDE
SD	STORM DRAIN
S	SLOPE
SS	SANITARY SEWER
SSCO	SEWER CLEAN-OUT
FM	FORCE MAIN
TC	TOP OF CURB
TD	TRENCH DRAIN
TS	TOP OF STEP
TW	TOP OF WALL
TYP	TYPICAL
W	WATER

LEGEND

	(E) CURB
	(E) EDGE OF PAVEMENT
400	(E) MAJOR CONTOUR
	(E) MINOR CONTOUR
	PROPERTY LINE
	BUILDING ENVELOPE
	EASEMENT
JT	(E) JOINT UTILITY TRENCH
SD	(E) STORM DRAIN
FM	(E) SEWER FORCE MAIN
W	(E) WATER LINE
	(N) EDGE OF PAVEMENT
JT	(N) JOINT UTILITY TRENCH
SD	(N) STORM DRAIN
WD	(N) WALL DRAIN
SS	(N) SANITARY SEWER
FM	(N) SEWER FORCE MAIN
W	(N) WATER LINE
	(N) WALL
	(N) SAWCUT LINE
400	DESIGN MAJOR CONTOUR
	DESIGN MINOR CONTOUR
	(N) BUILDING FOOTPRINT

SHEET INDEX

C1	GRADING PLAN TITLE SHEET
C2	OVERALL PROJECT SITE
C3	DRIVEWAY GRADING PLAN
C4	SITE GRADING PLAN
C5	SITE CROSS SECTIONS
C6	STORMWATER CONTROL PLAN
C7	SITE UTILITY PLAN
C8	CONSTRUCTION DETAILS
C9	EROSION CONTROL PLAN
C10	CONSTRUCTION MANAGEMENT PLAN

L&S ENGINEERING AND SURVEYING, INC
2460 Garden Road, Suite G, Monterey, California 93940
P: 831.655.2723 F: 831.655.3425
LandSengineers.com

REGISTERED PROFESSIONAL ENGINEER
CHRISTOPHER J. SIMONDS
No. 59685
EXP. 12-31-25
CIVIL
STATE OF CALIFORNIA

DRAWN BY: MRS
DESIGNED BY: MRS
DATE: 1-22-2025
SCALE: AS SHOWN
JOB NUMBER: 24-07
LAST REVISED: N/A
REVISED BY: N/A

GRADING PLAN TITLE SHEET

SERWIN RESIDENCE
24 TEHAMA
CARMEL, CALIFORNIA 93923
(TEHAMA LOT 10)
APN 169-421-045

SHEET C1
OF
10 SHEETS

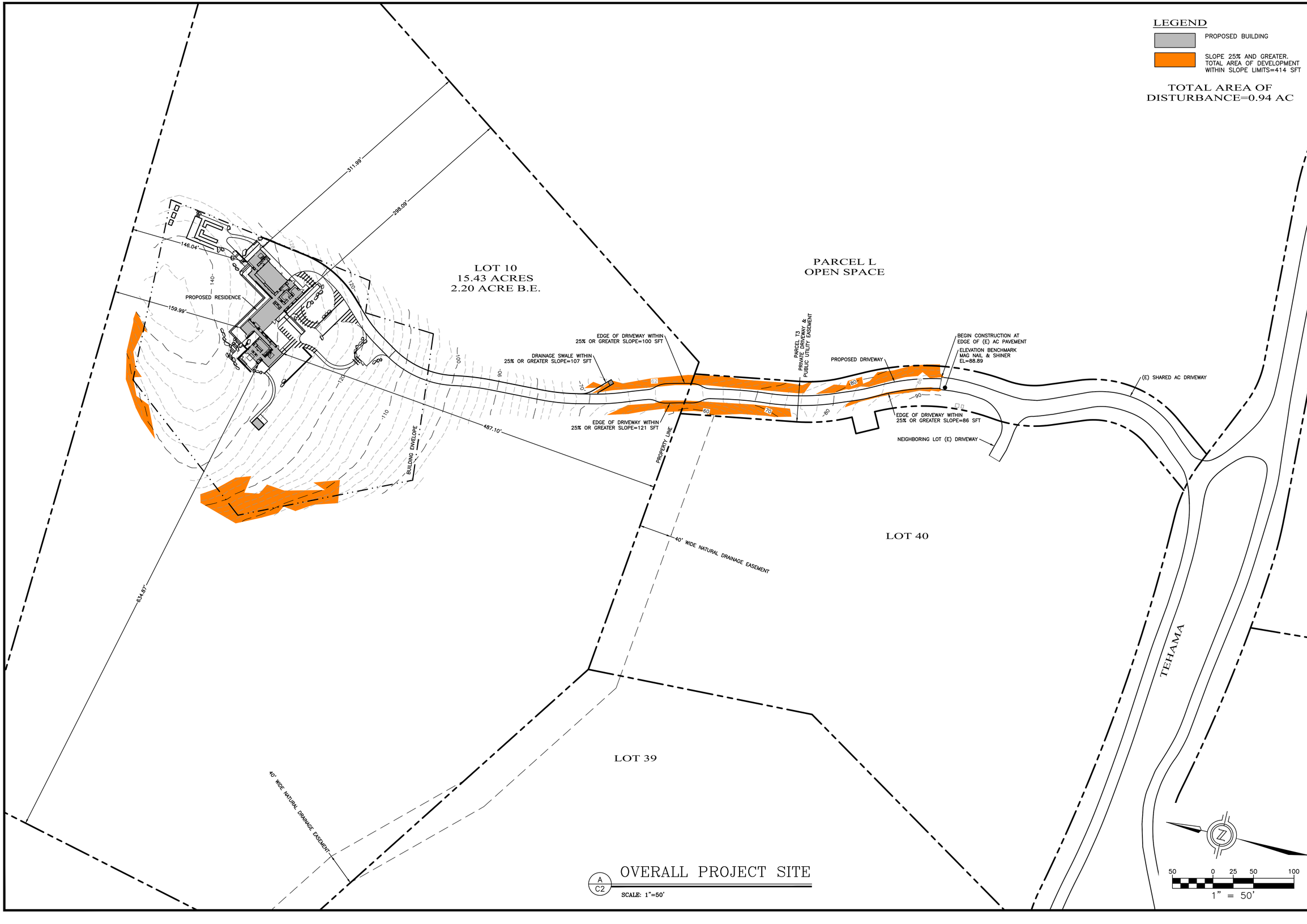

A C2 OVERALL PROJECT SITE

SCALE: 1"=50'

L&S ENGINEERING AND SURVEYING, INC
2460 Garden Road, Suite G, Monterey, California 93940
P: 831 655.2723 F: 831 655.3425
LandSengineers.com

REGISTERED PROFESSIONAL ENGINEER
CHRISTOPHER J. LOUIS
No. 59685
EXP. 12-31-25
CIVIL
STATE OF CALIFORNIA

DRAWN BY: MRS
DESIGNED BY: MRS
DATE: 1-22-2025
SCALE: AS SHOWN
JOB NUMBER: 24-07
LAST REVISED: N/A
REVISED BY: N/A

OVERALL PROJECT SITE

SERWIN RESIDENCE
24 TEHAMA
CARMEL, CALIFORNIA 93923
(TEHAMA LOT 10)
APN 169-421-045

SHEET C2
OF
10 SHEETS

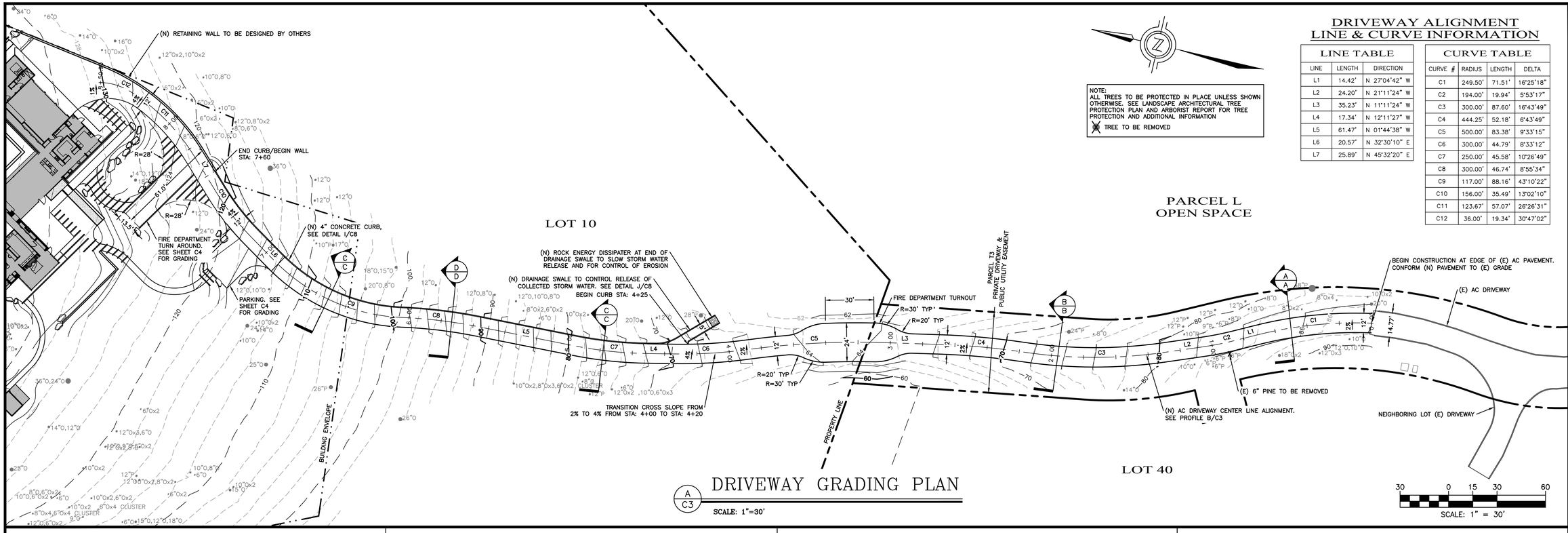

A / C3 DRIVEWAY GRADING PLAN

SCALE: 1"=30'

NOTE:
ALL TREES TO BE PROTECTED IN PLACE UNLESS SHOWN OTHERWISE. SEE LANDSCAPE ARCHITECTURAL TREE PROTECTION PLAN AND ARBORIST REPORT FOR TREE PROTECTION AND ADDITIONAL INFORMATION

TREE TO BE REMOVED

DRIVEWAY ALIGNMENT LINE & CURVE INFORMATION

LINE TABLE		
LINE	LENGTH	DIRECTION
L1	14.42'	N 27°04'42" W
L2	24.20'	N 21°11'24" W
L3	35.23'	N 11°11'24" W
L4	17.34'	N 12°11'27" W
L5	61.47'	N 01°44'38" W
L6	20.57'	N 32°30'10" E
L7	25.89'	N 45°32'20" E

CURVE TABLE			
CURVE #	RADIUS	LENGTH	DELTA
C1	249.50'	71.51'	16°25'18"
C2	194.00'	19.94'	5°53'17"
C3	300.00'	87.60'	16°43'49"
C4	444.25'	52.18'	6°43'49"
C5	500.00'	83.38'	9°33'15"
C6	300.00'	44.79'	8°33'12"
C7	250.00'	45.58'	10°26'49"
C8	300.00'	46.74'	8°55'34"
C9	117.00'	88.16'	43°10'22"
C10	156.00'	35.49'	13°02'10"
C11	123.67'	57.07'	26°26'31"
C12	36.00'	19.34'	30°47'02"

L&S ENGINEERING AND SURVEYING, INC
2460 Garden Road, Suite G, Monterey, California 93940
P: 831 655.2723 F: 831 655.3425
LandSengineers.com

REGISTERED PROFESSIONAL ENGINEER
CHRISTOPHER J. SIMONS
No. 59685
EXP. 12-31-25
CIVIL
STATE OF CALIFORNIA

DRAWN BY: MRS
DESIGNED BY: MRS
DATE: 1-22-2025
SCALE: AS SHOWN
JOB NUMBER: 24-07
LAST REVISED: N/A
REVISED BY: N/A

DRIVEWAY GRADING PLAN

SERWIN RESIDENCE
24 TEHAMA
CARMEL, CALIFORNIA 93923
(TEHAMA LOT 10)
APN 169-421-045

SHEET C3
OF
10 SHEETS

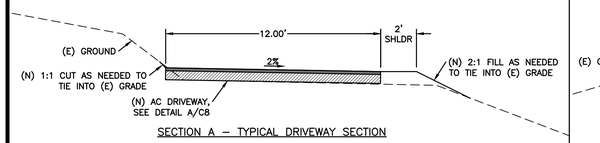

SECTION A – TYPICAL DRIVEWAY SECTION

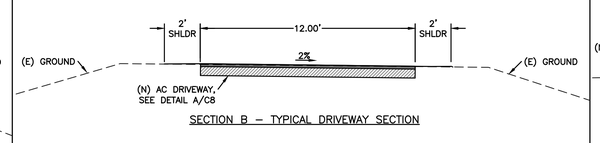

SECTION B – TYPICAL DRIVEWAY SECTION

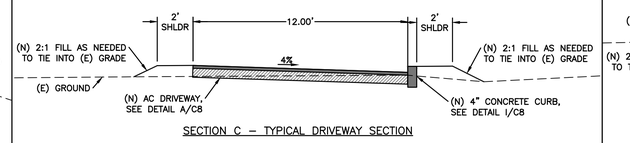

SECTION C – TYPICAL DRIVEWAY SECTION

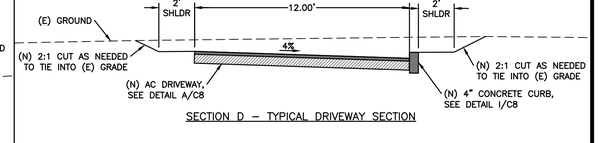

SECTION D – TYPICAL DRIVEWAY SECTION

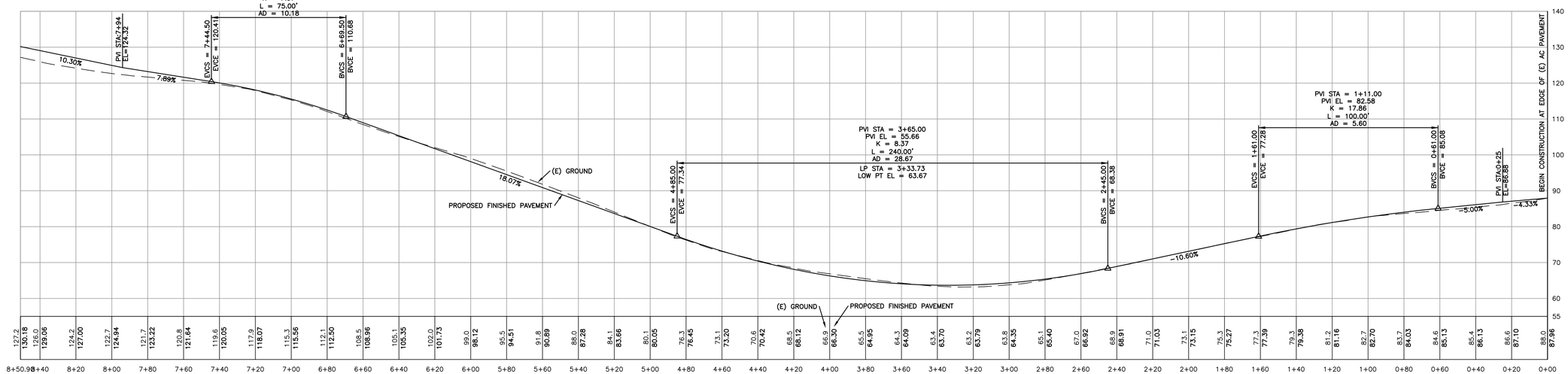

B / C3 DRIVEWAY CENTER LINE ALIGNMENT PROFILE

SCALE: 1"=30' HORIZONTAL & 1"=15' VERTICAL

LEGEND

- (N) BUILDING. SEE ARCHITECTURAL PLANS
- (N) STABILIZED DECOMPOSED GRANITE DRIVEWAY, SEE DETAIL B/C8
- (N) GEOGRID WITH PLANTING INFILL FIRE DEPARTMENT TURN AROUND, SEE DETAIL D/C8
- (N) CONCRETE PAVEMENT, SEE DETAILS F/C8 & G/C8
- (N) GRAVEL SITE WORK, SEE DETAILS C/C8 & E/C8
- (N) WATER FEATURE. SEE ARCHITECTURAL PLANS
- (N) WOOD DECK. SEE ARCHITECTURAL PLANS

AD	AREA DRAIN
BS	BOTTOM OF STEP
CB	CATCH BASIN
E	EXISTING
EG	EXISTING GRADE
EL	ELEVATION
FF	FINISHED FLOOR
FL	FLOW LINE
FG	FINISHED GRADE
FP	FINISHED PAVEMENT
ME	MATCH EXISTING
N	NEW
TD	TRENCH DRAIN
TS	TOP OF STEP
TW	TOP OF WALL

NOTE:
ALL TREES TO BE PROTECTED IN PLACE UNLESS SHOWN OTHERWISE. SEE LANDSCAPE ARCHITECTURAL TREE PROTECTION PLAN AND ARBORIST REPORT FOR TREE PROTECTION AND ADDITIONAL INFORMATION

TREE TO BE REMOVED

KEYNOTES:

1 FOUNDATION STEM WALL REQUIRED. FOUNDATION DRAINAGE AND WATER PROOFING TO BE SPECIFIED BY OTHERS. L&S ENGINEERING IS NOT RESPONSIBLE FOR ANY ISSUES OCCURRING FROM WATER INTRUSION OR MOISTURE.

EARTHWORK

CUT=1260 CY
FILL=540 CY
NET=720 CY CUT
(INCLUDES AC DRIVEWAY GRADING)

EARTHWORK QUANTITIES AS CALCULATED BY THE ENGINEER ARE TO FINISHED GRADE AND ARE ESTIMATES ONLY. AN 11" SECTION WAS ASSUMED FOR THE BUILDING SLAB, A 10" SECTION WAS ASSUMED FOR THE DG DRIVEWAY, AN 8" SECTION WAS ASSUMED FOR THE AC DRIVEWAY, A 10" SECTION WAS ASSUMED FOR THE GEOGRID TURN AROUND, A 6" SECTION WAS ASSUMED FOR THE GRAVEL SITE WORK, AND A 9" SECTION WAS ASSUMED FOR THE CONC SITE WORK. A 15% COMPACTION RATIO WAS ASSUMED FOR FILL LOCATIONS. SPOILS FROM UTILITY TRENCHING AND RETAINING WALL BACKFILL WERE NOT INCLUDED IN THESE CALCULATIONS. OVER EXCAVATION AND ENGINEERED FILL MAT PARAMETERS SET BY GEOTECHNICAL REPORT WERE NOT INCLUDED IN THESE CALCULATIONS. IT IS THE CONTRACTOR'S RESPONSIBILITY TO VERIFY THESE QUANTITIES BY PERFORMING HIS OWN CALCULATIONS.

SITE GRADING PLAN

A/C4

SCALE: 1"=10'

L&S ENGINEERING AND SURVEYING, INC
2460 Garden Road, Suite G, Monterey, California 93940
P: 831 655.2723 F: 831 655.3425
LandSengineers.com

REGISTERED PROFESSIONAL ENGINEER
CHRISTOPHER J. SOLOS
No. 59685
EXP. 12-31-25
CIVIL
STATE OF CALIFORNIA

DRAWN BY: MRS
DESIGNED BY: MRS
DATE: 1-22-2025
SCALE: AS SHOWN
JOB NUMBER: 24-07
LAST REVISED: N/A
REVISED BY: N/A

SITE GRADING PLAN

SERWIN RESIDENCE
24 TEHAMA
CARMEL, CALIFORNIA 93923
(TEHAMA LOT 10)
APN 169-421-045

SHEET C4
OF
10 SHEETS

10 0 5 10 20
1" = 10'

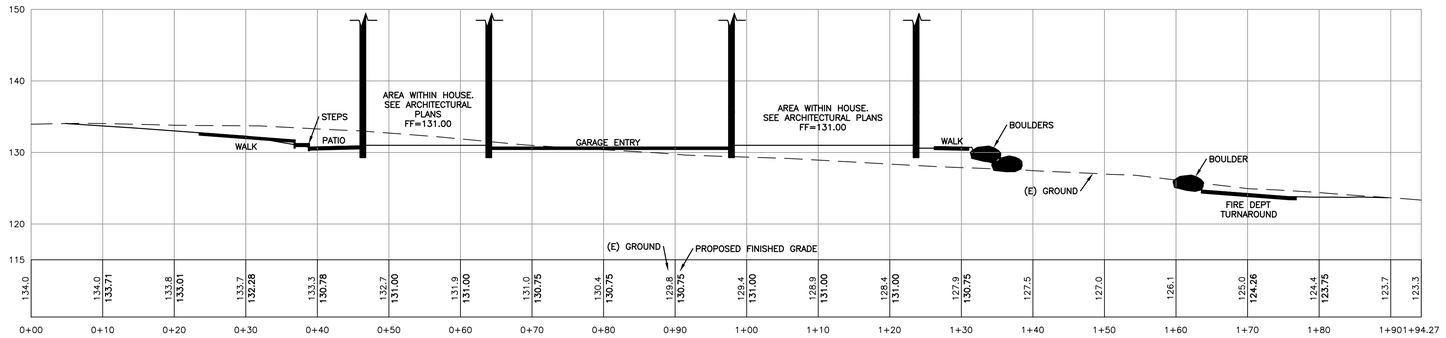

A/C5 SITE CROSS SECTION – LOOKING SOUTH EAST

SCALE: 1"=10'

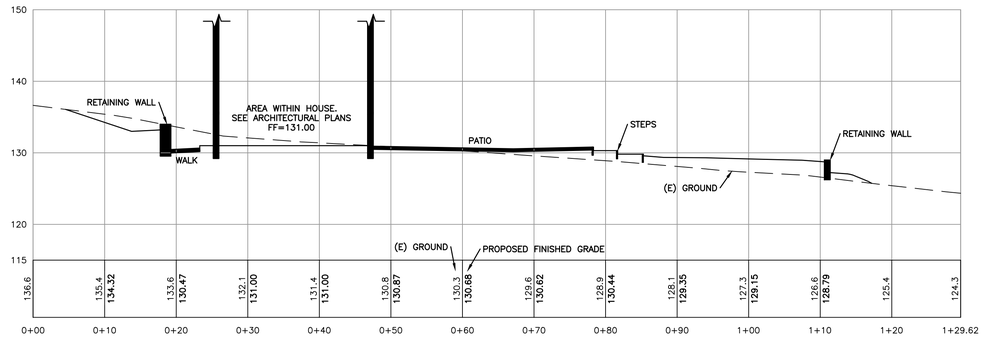

B/C5 SITE CROSS SECTION – LOOKING SOUTH EAST

SCALE: 1"=10'

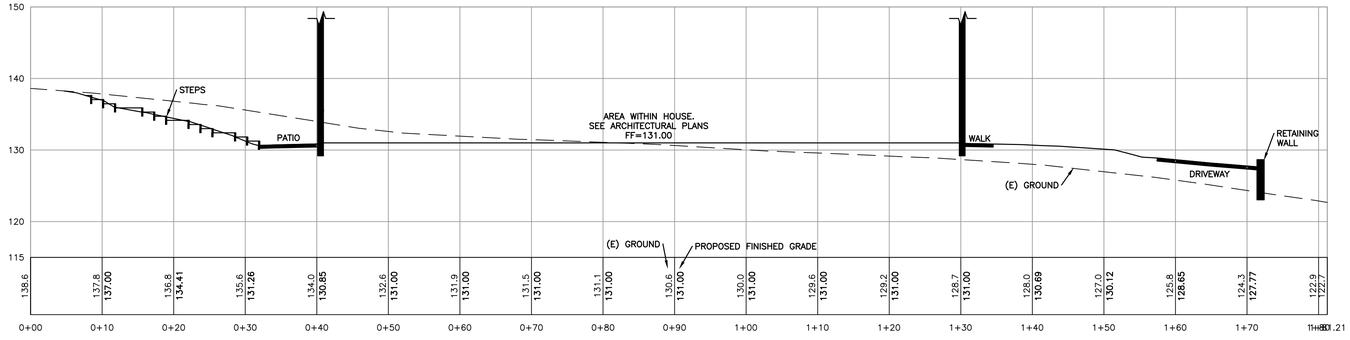

C/C5 SITE CROSS SECTION – LOOKING NORTH EAST

SCALE: 1"=10'

L&S ENGINEERING AND SURVEYING, INC
2460 Garden Road, Suite G, Monterey, California 93940
P: 831.655.2723 F: 831.655.3425
LandSengineers.com

REGISTERED PROFESSIONAL ENGINEER
CHRISTOPHER J. LOUDON
No. 59685
EXP. 12-31-25
CIVIL
STATE OF CALIFORNIA

DRAWN BY: MRS
DESIGNED BY: MRS
DATE: 1-22-2025
SCALE: AS SHOWN
JOB NUMBER: 24-07
LAST REVISED: N/A
REVISED BY: N/A

SITE CROSS SECTIONS

SERWIN RESIDENCE
24 TEHAMA
CARMEL, CALIFORNIA 93923
(TEHAMA LOT 10)
APN 169-421-045

SHEET C5
OF
10 SHEETS

STORM WATER RUNOFF MITIGATION NOTES:
1. THIS PROPERTY IS PART OF THE TEHAMA SUBDIVISION. THE SUBDIVISION HAS A SERIES OF DETENTION/RETENTION BASINS INCORPORATED INTO ITS OVERALL LAYOUT TO MITIGATE STORM WATER RUNOFF FROM INTERNAL ROADS AND ALL FUTURE LOT CONSTRUCTION. FOR ADDITIONAL INFORMATION SEE MONTEREY COUNTY APPROVED DRAINAGE REPORTS PREPARED FOR TEHAMA (FORMERLY KNOWN AS CANADA WOODS AND CANADA WOODS NORTH). THIS SUBDIVISION IS NOT WITHIN THE NPDES MUNICIPAL GENERAL PERMIT BOUNDARY.
2. STORM WATER RUNOFF FROM THE PROPOSED RESIDENCE IS TO BE COLLECTED BY THE STORM DRAIN SYSTEM SHOWN AND DISPERSED AT MULTIPLE POINTS AWAY FROM THE RESIDENCE. STORM WATER RUNOFF WILL CONTINUE OVERLAND UNTIL IT IS COLLECTED UP BY THE NATURAL DRAINAGE RAVINE THAT RUNS ALONG THE SOUTHERN EDGE OF THE PROPERTY. RUNOFF FROM THIS LOT WILL ULTIMATELY END UP IN TEHAMA DETENTION/RETENTION POND E FOR MITIGATION AS PREVIOUSLY APPROVED BY MONTEREY COUNTY.
3. PROPOSED SINGLE FAMILY RESIDENCE
   TOTAL PRE-PROJECT OR REPLACED IMPERVIOUS AREA = 0 SFT
   TOTAL POST-PROJECT OR NEW IMPERVIOUS AREA = 18,338 SFT
   (DRIVEWAY=11,965 SFT, BUILDING=4,613 SFT, YOGA STUDIO=118 SFT, CONC PAVEMENT=1,455 SFT, WATER FEATURES=187 SFT)
   TOTAL POST-PROJECT OR NEW PERVIOUS AREA = 3,734 SFT
   (GRAVEL SITE WORK=1,105 SFT, DECK=309 SFT, GEOGRID PLANTED=1,100 SFT, DG SITE WORK=1,220 SFT)
4. PROJECT SITE WITHIN WATERSHED MANAGEMENT ZONE 1

KEYNOTES:

1 (N) ROOF DRAIN TO BE ROUTED WITHIN CEILING TO EXTERIOR WALL AND DOWN EXTERIOR WALL. SEE ARCHITECTURAL PLANS
2 (N) ROOF DRAIN CONNECTION TO STORM DRAIN
3 (N) BUILDING FOUNDATION DRAINAGE LINE SHOWN FOR REFERENCE ONLY. SEE ARCHITECTURAL AND STRUCTURAL PLANS FOR CROSS SECTIONS AND GEOTECHNICAL ENGINEER FOR SPECIFICATIONS
4 (N) 9"X9" ATRIUM GRATE (GREEN NDS-991) W/ 9"X9" DEEP HOUSING SPIGOT ADAPTER (NDS-931), OR EQUIVALENT. GRATE=132.00, 4" SD INV=128.71
5 (N) 4" PVC STORM DRAIN, L=11', S=3.3%
6 (N) 9"X9" SQUARE GRATE (SAND NDS-999S) W/ 9"X9" CATCH BASIN (NDS-900-4), OR EQUIVALENT. GRATE=130.25, 4" INV IN=128.34, 4" INV OUT=128.34
7 (N) 4" PVC STORM DRAIN, L=100', S=1.8%
8 (N) CLEAN-OUT, SEE DETAIL M/C8. 4" SD INV=127.96
9 (N) 8" NYLOPLAST DRAIN BASIN W/ ATRIUM GRATE, OR EQUIVALENT. GRATE=133.00, 4" INV OUT=128.18, SUMP=127.68
10 (N) 8" NYLOPLAST DRAIN BASIN W/ ATRIUM GRATE, OR EQUIVALENT. GRATE=133.00, 4" INV OUT=127.36, SUMP=126.86
11 (N) 8" NYLOPLAST DRAIN BASIN W/ ATRIUM GRATE, OR EQUIVALENT. GRATE=133.00, 4" INV OUT=126.75, SUMP=126.25
12 (N) 4" ACO K100 SLOPED CHANNEL TRENCH DRAIN W/ TAN PLASTIC LONGITUDINAL GRATE (ACO 496D), OR EQUIVALENT. GRATE=130.47, CONNECT TO STORM DRAIN
13 (N) 9"X9" SQUARE GRATE (SAND NDS-999S) W/ 9"X9" CATCH BASIN (NDS-900-4), OR EQUIVALENT. GRATE=130.24, 4" INV IN=126.59, 4" INV OUT=126.59
14 (N) 4" PVC STORM DRAIN, L=24', S=1.8%
15 (N) 9"X9" ATRIUM GRATE (GREEN NDS-9991) W/ 9"X9" CATCH BASIN (NDS-900-4), OR EQUIVALENT. GRATE=130.25, 4" INV IN=126.13, 4" WD INV IN=126.13, 4" INV OUT=126.13
16 (N) 9"X9" SQUARE GRATE (GREEN NDS-990) W/ 9"X9" DEEP HOUSING SPIGOT ADAPTER (NDS-931), OR EQUIVALENT. GRATE=130.20, 4" SD INV=126.45
17 (N) 4" PVC STORM DRAIN, L=16', S=2.0%
18 (N) 4" PVC STORM DRAIN, L=107', S=2.0%
19 NOT USED
20 (N) CLEAN-OUT, SEE DETAIL M/C8. 4" SD INV=128.39
21 NOT USED
22 NOT USED
23 (N) STORM DRAIN AND DRAIN PIPES TO DAYLIGHT AND DRAIN ONTO (N) ROCK ENERGY DISSIPATER AT GRADE, SEE DETAIL N/C8
24 (N) 4" ROUND GRATE (SAND NDS-13S), OR EQUIVALENT. GRATE=134.50, 4" SD INV=132.17
25 (N) 9"X9" SQUARE GRATE (SAND NDS-999S) W/ 9"X9" CATCH BASIN (NDS-900-4), OR EQUIVALENT. GRATE=134.70, 4" INV IN=131.63, 4" INV IN=131.63, 4" INV OUT=131.63
26 (N) 4" ROUND GRATE (SAND NDS-13S), OR EQUIVALENT. GRATE=134.50, 4" SD INV=132.17
27 (N) 4" PVC STORM DRAIN, L=12', S=4.5%
28 (N) 4" PVC STORM DRAIN, L=12', S=4.5%
29 (N) 4" PVC STORM DRAIN, L=50', S=7.9%
30 (N) 9"X9" SQUARE GRATE (SAND NDS-999S) W/ 9"X9" DEEP HOUSING SPIGOT ADAPTER (NDS-931), OR EQUIVALENT. GRATE=130.25, 4" SD INV=127.78
31 (N) 4" PVC STORM DRAIN, L=29', S=2.0%
32 (N) 9"X9" SQUARE GRATE (SAND NDS-999S) W/ 9"X9" DEEP HOUSING SPIGOT ADAPTER (NDS-931), OR EQUIVALENT. GRATE=130.25, 4" SD INV=127.56
33 (N) 9"X9" ATRIUM GRATE (GREEN NDS-9991) W/ 9"X9" CATCH BASIN (NDS-900-4), OR EQUIVALENT. GRATE=130.25, 4" INV IN=127.20, 4" INV OUT=127.20
34 (N) 4" PVC STORM DRAIN, L=94', S=2.0%
35 (N) 12" NYLOPLAST DRAIN BASIN W/ SOLID LID, OR EQUIVALENT (JUNCTION BOX). LID=129.00, 4" INV IN=125.32, 4" INV OUT=125.32, SUMP=124.82
36 (N) 12"X12" JENSEN PRECAST CONCRETE CATCH BASIN W/ TRAFFIC RATED GRATE, OR EQUIVALENT. GRATE=129.87, 4" INV OUT=127.04
37 (N) 4" PVC STORM DRAIN, L=12', S=5.6%
38 (N) 4" PVC STORM DRAIN, L=40', S=2.0%
39 (N) 4" ROUND GRATE (SAND NDS-13S), OR EQUIVALENT. GRATE=130.50, 4" SD INV=128.17
40 (N) 4" ROUND GRATE (SAND NDS-13S), OR EQUIVALENT. GRATE=130.50, 4" SD INV=128.17
41 (N) CLEAN-OUT, SEE DETAIL M/C8. 4" SD INV=128.00
42 (N) 4" ROUND GRATE (SAND NDS-13S), OR EQUIVALENT. GRATE=130.50, 4" SD INV=125.17
43 (N) 4" PVC STORM DRAIN, L=131', S=7.0%
44 (N) STORM DRAIN TO DAYLIGHT AND DRAIN ONTO (N) ROCK ENERGY DISSIPATER AT GRADE, SEE DETAIL N/C8
45 (N) 4" ROUND GRATE (BRASS NDS-906PB), OR EQUIVALENT. GRATE=130.56, 4" SD INV=128.23
46 (N) 4" PVC STORM DRAIN, L=52', S=9.6%
47 (N) RETAINING WALL DRAINAGE LINE SHOWN FOR REFERENCE ONLY. SEE STRUCTURAL PLANS FOR CROSS SECTIONS AND GEOTECHNICAL REPORT FOR SPECIFICATIONS
48 CONTRACTOR TO CONNECT DRAINAGE LINE TO SOLID 4" PVC DRAIN PIPE
49 (N) 4" PVC DRAIN PIPE, L=63', S=VARIES% (1.0% MIN)
50 (N) 4" PVC DRAIN PIPE, L=55', S=VARIES% (1.0% MIN)
51 (N) DRAIN PIPE TO DAYLIGHT AND DRAIN ONTO (N) 24"X24" ROCK ENERGY DISSIPATER AT GRADE, SIMILAR TO DETAIL N/C8

GARAGE

PROPOSED RESIDENCE
FF=131.00

YOGA STUDIO
FF=129.75

LEGEND

- (N) AREA DRAIN/CATCH BASIN (AD OR CB)
- RD (N) ROOF DRAINAGE CONNECTION
- DS (N) ROOF DRAINAGE DOWNSPOUT
- JB (N) JUNCTION BOX
- CO (N) CLEAN-OUT
- SD (N) STORM DRAIN
- WD (N) WALL DRAIN
- FD (N) FOUNDATION DRAIN
- D (N) SOLID DRAIN LINE

STORM DRAIN NOTES:
1. ALL WALLS AND DRAINAGE BEHIND WALLS TO BE DESIGNED BY OTHERS. WALL DRAINS AND FOUNDATION DRAINS ARE NOT TO BE CONNECTED TO THE STORM DRAIN SYSTEM SHOWN AND ARE TO BE PIPED, AS NECESSARY, TO DAYLIGHT ONTO THE (E) SLOPE DOWNHILL.
2. ALL STORM DRAIN LATERALS ARE 4" PVC OR HDPE AND HAVE A MINIMUM SLOPE OF 1.0% UNLESS NOTED OTHERWISE.
3. ALL STORM DRAIN PIPE TO BE SDR-35 PVC (OR STRONGER) OR ADS N-12 HDPE PIPE (OR EQUIVALENT).
4. REDUCER TO BE USED TO CONNECT GRATES AND HOUSING TO PVC PIPE SHOWN. WYE FITTING TO BE USED AT AREA DRAIN LOCATIONS WITH NO BOX.
5. 45° WYE FITTING TO BE USED AT ALL STORM DRAIN PIPE INTERSECTIONS AS SHOWN.
6. SEE DETAIL K/C8 FOR TRENCH DETAIL.

A / C6 STORMWATER CONTROL PLAN
SCALE: 1"=10'

10 0 5 10 20
1" = 10'

L&S ENGINEERING AND SURVEYING, INC
2460 Garden Road, Suite G, Monterey, California 93940
P: 831 655.2723 F: 831 655.3425
LandSengineers.com

REGISTERED PROFESSIONAL ENGINEER
CHRISTOPHER J. NICOLAS
No. 59685
EXP. 12-31-25
CIVIL
STATE OF CALIFORNIA

DRAWN BY: MRS
DESIGNED BY: MRS
DATE: 1-22-2025
SCALE: AS SHOWN
JOB NUMBER: 24-07
LAST REVISED: N/A
REVISED BY: N/A

STORMWATER CONTROL PLAN

SERWIN RESIDENCE
24 TEHAMA
CARMEL, CALIFORNIA 93923
(TEHAMA LOT 10)
APN 169-421-045

SHEET C6
OF
10 SHEETS

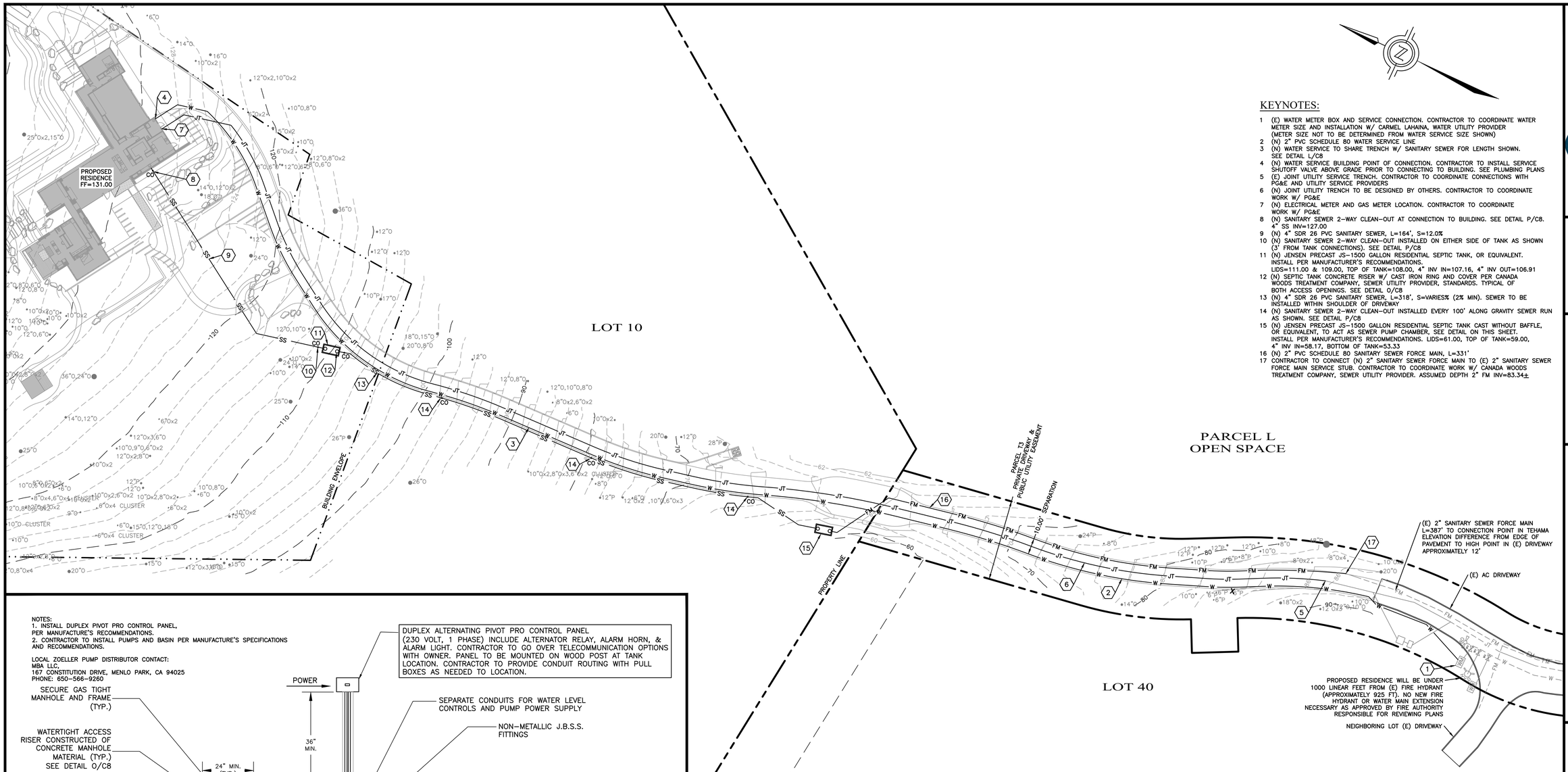

KEYNOTES:

1 (E) WATER METER BOX AND SERVICE CONNECTION. CONTRACTOR TO COORDINATE WATER METER SIZE AND INSTALLATION W/ CARMEL LAHAINA, WATER UTILITY PROVIDER (METER SIZE NOT TO BE DETERMINED FROM WATER SERVICE SIZE SHOWN)
2 (N) 2" PVC SCHEDULE 80 WATER SERVICE LINE
3 (N) WATER SERVICE TO SHARE TRENCH W/ SANITARY SEWER FOR LENGTH SHOWN. SEE DETAIL L/C8
4 (N) WATER SERVICE BUILDING POINT OF CONNECTION. CONTRACTOR TO INSTALL SERVICE SHUTOFF VALVE ABOVE GRADE PRIOR TO CONNECTING TO BUILDING. SEE PLUMBING PLANS
5 (E) JOINT UTILITY SERVICE TRENCH. CONTRACTOR TO COORDINATE CONNECTIONS WITH PG&E AND UTILITY SERVICE PROVIDERS
6 (N) JOINT UTILITY TRENCH TO BE DESIGNED BY OTHERS. CONTRACTOR TO COORDINATE WORK W/ PG&E
7 (N) ELECTRICAL METER AND GAS METER LOCATION. CONTRACTOR TO COORDINATE WORK W/ PG&E
8 (N) SANITARY SEWER 2-WAY CLEAN-OUT AT CONNECTION TO BUILDING. SEE DETAIL P/C8. 4" SS INV=127.00
9 (N) 4" SDR 26 PVC SANITARY SEWER, L=164', S=12.0%
10 (N) SANITARY SEWER 2-WAY CLEAN-OUT INSTALLED ON EITHER SIDE OF TANK AS SHOWN (3' FROM TANK CONNECTIONS). SEE DETAIL P/C8
11 (N) JENSEN PRECAST JS-1500 GALLON RESIDENTIAL SEPTIC TANK, OR EQUIVALENT. INSTALL PER MANUFACTURER'S RECOMMENDATIONS. LIDS=111.00 & 109.00, TOP OF TANK=108.00, 4" INV IN=107.16, 4" INV OUT=106.91
12 (N) SEPTIC TANK CONCRETE RISER W/ CAST IRON RING AND COVER PER CANADA WOODS TREATMENT COMPANY, SEWER UTILITY PROVIDER, STANDARDS. TYPICAL OF BOTH ACCESS OPENINGS. SEE DETAIL O/C8
13 (N) 4" SDR 26 PVC SANITARY SEWER, L=318', S=VARIES% (2% MIN). SEWER TO BE INSTALLED WITHIN SHOULDER OF DRIVEWAY
14 (N) SANITARY SEWER 2-WAY CLEAN-OUT INSTALLED EVERY 100' ALONG GRAVITY SEWER RUN AS SHOWN. SEE DETAIL P/C8
15 (N) JENSEN PRECAST JS-1500 GALLON RESIDENTIAL SEPTIC TANK CAST WITHOUT BAFFLE, OR EQUIVALENT, TO ACT AS SEWER PUMP CHAMBER, SEE DETAIL ON THIS SHEET. INSTALL PER MANUFACTURER'S RECOMMENDATIONS. LIDS=61.00, TOP OF TANK=59.00, 4" INV IN=58.17, BOTTOM OF TANK=53.33
16 (N) 2" PVC SCHEDULE 80 SANITARY SEWER FORCE MAIN, L=331'
17 CONTRACTOR TO CONNECT (N) 2" SANITARY SEWER FORCE MAIN TO (E) 2" SANITARY SEWER FORCE MAIN SERVICE STUB. CONTRACTOR TO COORDINATE WORK W/ CANADA WOODS TREATMENT COMPANY, SEWER UTILITY PROVIDER. ASSUMED DEPTH 2" FM INV=83.34±

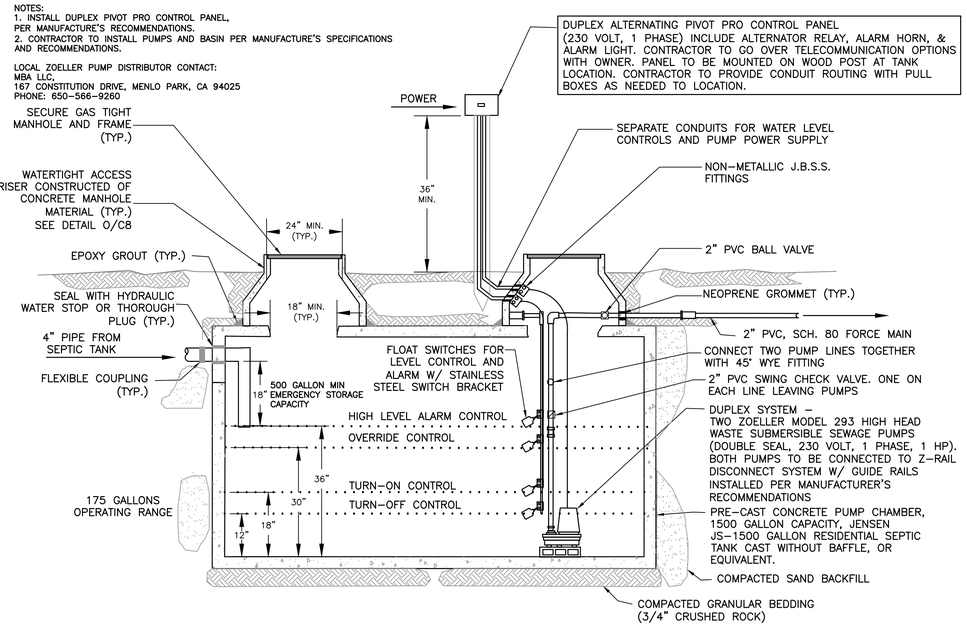

SEWER PUMP CHAMBER DETAIL

UTILITY NOTES:
1. STORM DRAIN AND SANITARY SEWER INVERTS TO GOVERN UTILITY LINE INSTALLATIONS.
2. ALL NEW UTILITY AND DISTRIBUTION LINES SHALL BE PLACED UNDERGROUND AND INSTALLED WITH PIPE MANUFACTURER'S RECOMMENDED BENDING RADIUS
3. ALL ELECTRICAL, TV, COMMUNICATION, AND GAS LINES TO BE COORDINATED BY GENERAL CONTRACTOR
4. CANADA WOODS TREATMENT COMPANY STANDARD PLANS AND SPECIFICATIONS TO BE FOLLOWED THROUGHOUT THE INSTALLATION OF THE WASTE SYSTEM. SEPTIC TANKS TO BE INSTALLED PER MANUFACTURER'S RECOMMENDATIONS.
5. CONCRETE RISERS AND CAST IRON RINGS AND COVERS ON ALL TANK ACCESS OPENINGS PER CANADA WOODS TREATMENT COMPANY STANDARDS. SEE DETAIL O/C8
6. THIS SITE UTILIZES A SEPTIC TANK THAT TIES INTO THE CANADA WOODS TREATMENT COMPANY'S OVERALL SEWAGE DISPOSAL SYSTEM FOR TEHAMA.
7. SEE K/C8 FOR TRENCHING DETAIL

LEGEND

CO	(N) CLEAN-OUT
SS	(N) GRAVITY SANITARY SEWER
FM	(N) FORCE MAIN SANITARY SEWER
W	(N) WATER SERVICE
JT	(N) JOINT UTILITY TRENCH
FM	(E) SEWER FORCE MAIN
W	(E) WATER SERVICE
JT	(E) JOINT UTILITY TRENCH

SITE UTILITY PLAN

A / C7

SCALE: 1"=30'

30 0 15 30 60

SCALE: 1" = 30'

L&S ENGINEERING AND SURVEYING, INC
2460 Garden Road, Suite G, Monterey, California 93940
P: 831 655.2723 F: 831 655.3425
LandSengineers.com

REGISTERED PROFESSIONAL ENGINEER
CHRISTOPHER J. LOUIS
No. 59685
EXP. 12-31-25
CIVIL
STATE OF CALIFORNIA

DRAWN BY: MRS
DESIGNED BY: MRS
DATE: 1-22-2025
SCALE: AS SHOWN
JOB NUMBER: 24-07
LAST REVISED: N/A
REVISED BY: N/A

SITE UTILITY PLAN

SERWIN RESIDENCE
24 TEHAMA
CARMEL, CALIFORNIA 93923
(TEHAMA LOT 10)
APN 169-421-045

SHEET C7
OF
10 SHEETS

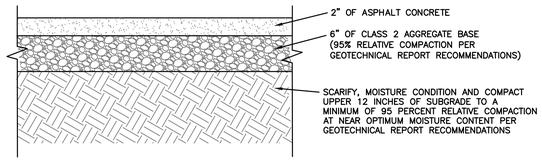

AC DRIVEWAY SECTION

A / C8

NTS

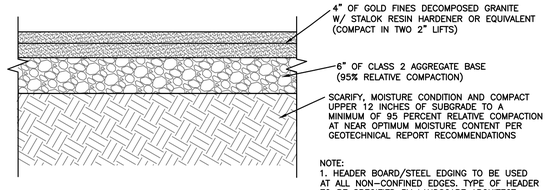

DECOMPOSED GRANITE SECTION WITHIN VEHICULAR TRAFFIC AREAS

B / C8

NTS

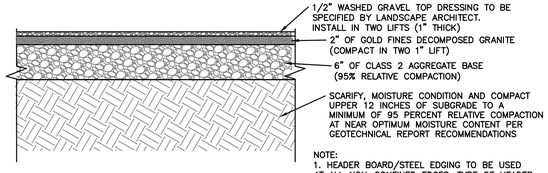

GRAVEL PARKING PAD SECTION

C / C8

NTS

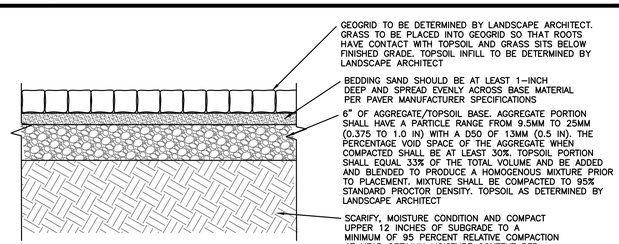

NOTE:
1. CONTRACTOR TO INSTALL PER MANUFACTURER'S SPECIFICATIONS

GEOGRID W/ PLANTING SECTION

D / C8

NTS

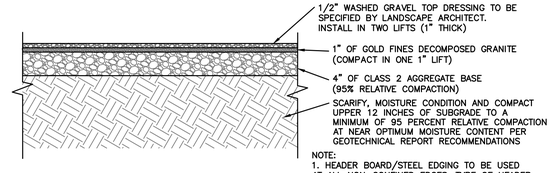

GRAVEL SITE WORK SECTION

E / C8

NTS

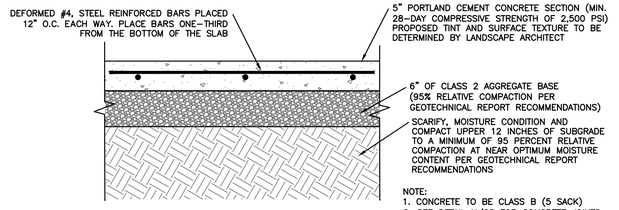

NOTE:
1. CONCRETE TO BE CLASS B (5 SACK)
2. SEE DETAIL H/C8 FOR CONCRETE JOINTS.

CONCRETE PAVEMENT SECTION WITHIN VEHICULAR TRAFFIC AREAS

F / C8

NTS

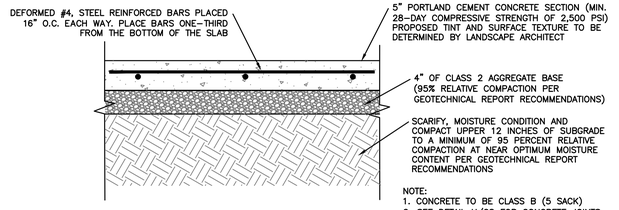

NOTE:
1. CONCRETE TO BE CLASS B (5 SACK)
2. SEE DETAIL H/C8 FOR CONCRETE JOINTS.

CONCRETE PAVEMENT SECTION

G / C8

NTS

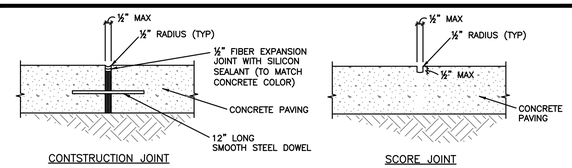

NOTES:
1. PROVIDE CONSTRUCTION JOINTS AT CURVES, TANGENTS, AND CORNERS. AREAS SHOULD HAVE CONSTRUCTION JOINTS WITH SQUARE FOOTAGES LESS THAN 250 SFT.
2. SCORE JOINTS SHALL BE SPACED UNIFORMLY BETWEEN CONSTRUCTION JOINTS.
3. ALL COLD JOINTS AND EXPANSION JOINTS (CONSTRUCTION JOINT) SHOULD BE CONSTRUCTED WITH ½"X12" SMOOTH STEEL DOWELS. DOWELS SHOULD BE SPACED AT A MAXIMUM SPACING OF 18 INCHES

CONCRETE JOINTS

H / C8

NTS

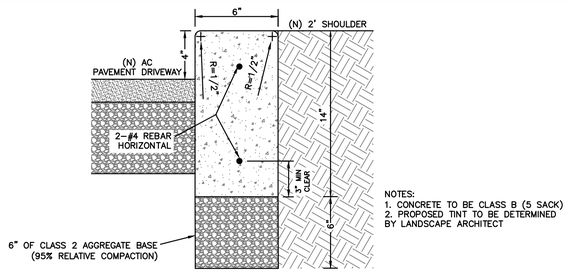

NOTES:
1. CONCRETE TO BE CLASS B (5 SACK)
2. PROPOSED TINT TO BE DETERMINED BY LANDSCAPE ARCHITECT

4" CONCRETE CURB DETAIL

I / C8

NTS

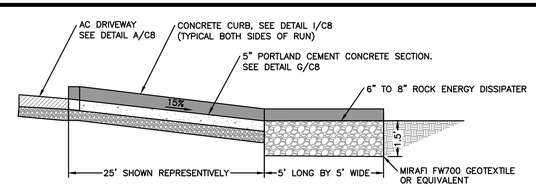

CONCRETE DRAINAGE SWALE DETAIL

J / C8

NTS

NOTE:
A 3 FT WIDE CONCRETE PLUG SHALL BE REQUIRED AROUND THE PIPE OR CONDUIT AT PLACES WHERE UTILITY TRENCHES INTERSECT THE BUILDING PERIMETER PER GEOTECHNICAL REPORT RECOMMENDATIONS

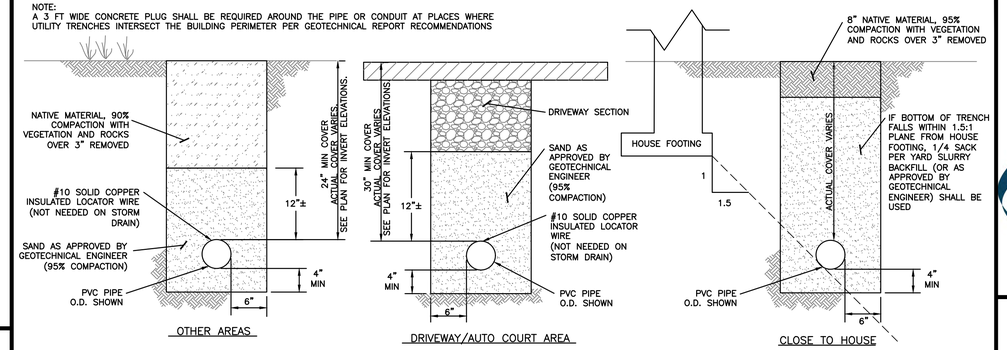

UTILITY AND STORM DRAIN TRENCHING DETAIL

K / C8

NTS

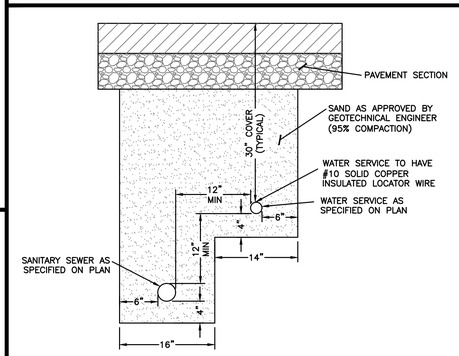

WATER/SEWER TRENCH

L / C8

NTS

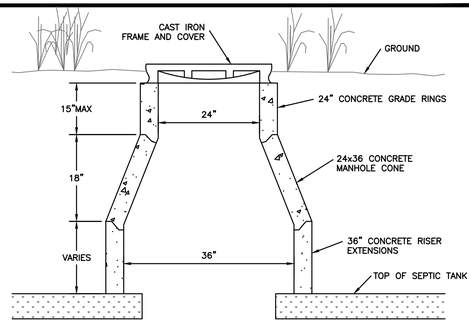

SEPTIC TANK CONCRETE RISER

O / C8

NTS

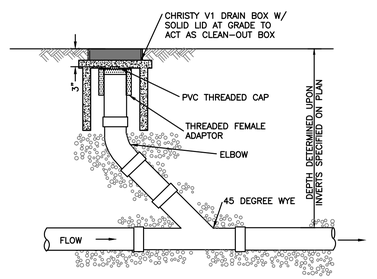

STORM DRAIN CLEAN-OUT

M / C8

NTS

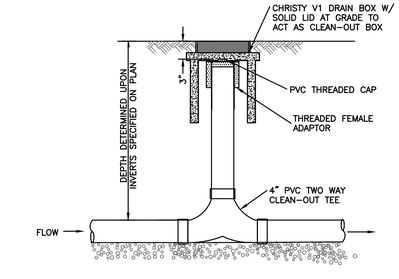

2-WAY SEWER CLEAN-OUT

P / C8

NTS

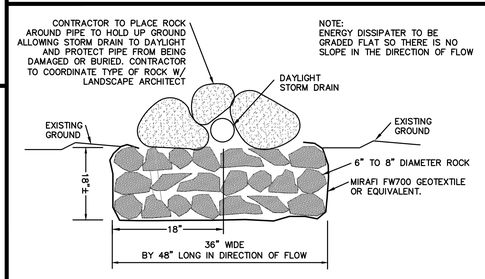

ENERGY DISSIPATER

N / C8

NTS

L&S ENGINEERING AND SURVEYING, INC
2460 Garden Road, Suite G, Monterey, California 93940
P: 831.655.2723 F: 831.655.3425
LandSengineers.com

REGISTERED PROFESSIONAL ENGINEER
CHRISTOPHER J. SIMON
No. 59685
EXP. 12-31-25
CIVIL
STATE OF CALIFORNIA

DRAWN BY: MRS
DESIGNED BY: MRS
DATE: 1-22-2025
SCALE: AS SHOWN
JOB NUMBER: 24-07
LAST REVISED: N/A
REVISED BY: N/A

CONSTRUCTION DETAILS

SERWIN RESIDENCE
24 TEHAMA
CARMEL, CALIFORNIA 93923
(TEHAMA LOT 10)
APN 169-421-045

SHEET C8
OF
10 SHEETS

EROSION/DUST CONTROL NOTES

1. VEGETATION REMOVAL BETWEEN OCTOBER 15th AND APRIL 15th SHALL NOT PRECEDE SUBSEQUENT GRADING OR CONSTRUCTION ACTIVITIES BY MORE THAN 15 DAYS. DURING THIS PERIOD, EROSION AND SEDIMENT CONTROL MEASURES MUST BE IN PLACE.
2. DURING WINTER OPERATIONS (BETWEEN OCTOBER 15 AND APRIL 15), THE FOLLOWING MEASURES MUST BE TAKEN:
A) DISTURBED SURFACES NOT INVOLVED IN THE IMMEDIATE OPERATIONS MUST BE PROTECTED BY MULCHING AND/OR OTHER EFFECTIVE MEANS OF SOIL PROTECTION.
B) ALL ROADS AND DRIVEWAYS SHALL HAVE DRAINAGE FACILITIES SUFFICIENT TO PREVENT EROSION ON OR ADJACENT TO THE ROADWAY OR THE DOWNHILL PROPERTIES.
C) DRAINAGE CONTROL MEASURES SHALL BE MAINTAINED AND IN PLACE AT THE END OF EACH DAY AND CONTINUOUSLY CHECKED THROUGHOUT THE LIFE OF THE PROJECT.
(MONTEREY COUNTY GRADING/EROSION ORD. 2806-16.12.090)
3. RUN-OFF FROM THE SITE SHALL BE DETAINED OR FILTERED BY BERMS, VEGETATED FILTER STRIPS, AND OR CATCH BASINS TO PREVENT THE ESCAPE OF SEDIMENT FROM THE DISTURBED AREA OR SITE. THESE DRAINAGE CONTROL MEASURES MUST BE MAINTAINED BY THE CONTRACTOR AS NECESSARY TO ACHIEVE THEIR PURPOSE THROUGHOUT THE LIFE OF THE PROJECT.
4. ALL CUT AND FILL SLOPES EXPOSED DURING THE COURSE OF CONSTRUCTION SHALL BE COVERED, SEEDED, OR OTHERWISE TREATED TO CONTROL EROSION WITHIN 48 HOURS AFTER GRADING SUBJECT TO THE APPROVAL OF THE DIRECTOR OF HCD-PLANNING AND HCD-BUILDING SERVICES. CONTRACTOR SHALL REVEGETATE SLOPES AND ALL DISTURBED AREAS THROUGH AN APPROVED PROCESS AS DETERMINED BY MONTEREY COUNTY. THIS MAY CONSIST OF EFFECTIVE PLANTING OF RYE GRASS, BARLEY OR SOME OTHER FAST GERMINATING SEED.
5. THE CONTRACTOR SHALL TAKE ALL NECESSARY MEASURES TO KEEP STREETS AND ROADS FREE FROM DIRT AND DEBRIS. SHOULD ANY DIRT OR DEBRIS BE DEPOSITED IN THE PUBLIC RIGHT-OF-WAY, THE CONTRACTOR SHALL REMOVE IT IMMEDIATELY.
6. THE DIRECTOR OF THE BUILDING INSPECTION DEPARTMENT MAY STOP OPERATIONS DURING PERIODS OF INCLEMENT WEATHER IF HE DETERMINES THAT EROSION PROBLEMS ARE NOT BEING CONTROLLED ADEQUATELY.
7. THE CONTRACTOR SHALL TAKE ALL NECESSARY MEASURES TO PREVENT AIRBORNE DUST FROM BECOMING A NUISANCE TO NEIGHBORING PROPERTIES. THE CONTRACTOR SHALL CONFORM TO THE STANDARDS FOR DUST-CONTROL AS ESTABLISHED BY THE AIR QUALITY MAINTENANCE DISTRICT. DUST CONTROL MEASURES TO BE IMPLEMENTED INCLUDE BUT ARE NOT LIMITED TO THE FOLLOWING:
A) PROVIDE EQUIPMENT AND MANPOWER REQUIRED FOR WATERING ALL EXPOSED OR DISTURBED EARTH.
B) COVER STOCKPILES OF DEBRIS, SOIL, OR OTHER MATERIALS WHICH MAY CONTRIBUTE TO AIRBORNE DUST.
C) KEEP CONSTRUCTION AREAS AND ADJACENT STREET FREE OF MUD AND DUST.
D) LANDSCAPE, SEED, OR COVER PORTIONS OF THE SITE AS SOON AS CONSTRUCTION IS COMPLETE.
8. CONTRACTOR SHALL CONDUCT ALL GRADING OPERATIONS IN SUCH A MANNER AS TO PRECLUDE WIND BLOWN DIRT, DUST AND RELATED DAMAGE TO NEIGHBORING PROPERTIES. SUFFICIENT WATERING TO CONTROL DUST IS REQUIRED AT ALL TIMES. CONTRACTOR SHALL ASSUME LIABILITY FOR CLAIMS RELATED TO WIND BLOWN MATERIAL. IF THE DUST CONTROL IS INADEQUATE AS DETERMINED BY THE MONTEREY COUNTY PLANNING AND BUILDING DEPARTMENT OR DESIGNATED REPRESENTATIVE, THE CONSTRUCTION WORK SHALL BE TERMINATED UNTIL CORRECTIVE MEASURES ARE TAKEN.
9. THE CONTRACTOR SHALL TAKE ALL NECESSARY MEASURES TO MINIMIZE EROSION AND PREVENT SEDIMENT LADEN RUN-OFF FROM ENTERING THE STORM DRAINAGE SYSTEM. ACCEPTABLE MEASURES MAY INCLUDE BUT NOT BE LIMITED TO THE FOLLOWING: INSTALLATION OF SILT FENCES, FIBER ROLLS, INSTALLATION OF STORM DRAIN INLET PROTECTION, AND INSTALLATION OF STABILIZED CONSTRUCTION ENTRANCES. AT THE CONTRACTOR'S DISCRETION, ANY ONE OR A COMBINATION OF THESE MEASURES MAY BE USED ABOVE AND BEYOND WHAT IS SHOWN ON THE PLANS.
10. PRIOR TO COMMENCEMENT OF ANY LAND DISTURBANCE, THE OWNER/APPLICANT SHALL SCHEDULE AN INSPECTION WITH HCD SERVICES TO ENSURE ALL NECESSARY SEDIMENT CONTROLS ARE IN PLACE AND THE PROJECT IS COMPLIANT WITH MONTEREY COUNTY GRADING AND EROSION CONTROL REGULATIONS.
11. DURING CONSTRUCTION THE OWNER/APPLICANT SHALL SCHEDULE AN INSPECTION WITH HCD SERVICES TO UPDATE COMPACTION TEST RECORDS, INSPECT DRAINAGE DEVICE INSTALLATION, REVIEW THE MAINTENANCE AND EFFECTIVENESS OF BMP'S INSTALLED, AS WELL AS, TO VERIFY THAT POLLUTANTS OF CONCERN ARE NOT DISCHARGED FROM THE SITE.
12. PRIOR TO FINAL INSPECTION, THE OWNER/APPLICANT SHALL SCHEDULE AN INSPECTION WITH HCD SERVICES TO CONDUCT A FINAL GRADING INSPECTION, COLLECT FINAL GEOTECHNICAL LETTER OF CONFORMANCE, ENSURE THAT ALL DISTURBED AREAS HAVE BEEN STABILIZED AND THAT ALL TEMPORARY EROSION AND SEDIMENT CONTROL MEASURES THAT ARE NO LONGER NEEDED HAVE BEEN REMOVED.

CONCRETE WASHOUT

1. TEMPORARY CONCRETE WASHOUT FACILITIES SHOULD BE LOCATED A MINIMUM OF 50 FT FROM STORM DRAIN INLETS, OPEN DRAINAGE FACILITIES, AND WATERCOURSES. EACH FACILITY SHOULD BE LOCATED AWAY FROM CONSTRUCTION TRAFFIC OR ACCESS AREAS TO PREVENT DISTURBANCE OR TRACKING.
2. A SIGN SHOULD BE INSTALLED ADJACENT TO EACH WASHOUT FACILITY TO INFORM CONCRETE EQUIPMENT OPERATORS TO UTILIZE THE PROPER FACILITIES.
3. TEMPORARY CONCRETE WASHOUT FACILITIES SHOULD BE CONSTRUCTED ABOVE GRADE OR BELOW GRADE AT THE OPTION OF THE CONTRACTOR. TEMPORARY CONCRETE WASHOUT FACILITIES SHOULD BE CONSTRUCTED AND MAINTAINED IN SUFFICIENT QUANTITY AND SIZE TO CONTAIN ALL LIQUID AND CONCRETE WASTE GENERATED BY WASHOUT OPERATIONS.
4. TEMPORARY WASHOUT FACILITIES SHOULD HAVE A TEMPORARY PIT OR BERMED AREAS OF SUFFICIENT VOLUME TO COMPLETELY CONTAIN ALL LIQUID AND WASTE CONCRETE MATERIALS GENERATED DURING WASHOUT PROCEDURES.
5. WASHOUT OF CONCRETE TRUCKS SHOULD BE PERFORMED IN DESIGNATED AREAS ONLY.
6. ONLY CONCRETE FROM MIXER TRUCK CHUTES SHOULD BE WASHED INTO CONCRETE WASHOUT.
7. CONCRETE WASHOUT FROM CONCRETE PUMPER BINS CAN BE WASHED INTO CONCRETE PUMPER TRUCKS AND DISCHARGED INTO DESIGNATED WASHOUT AREA OR PROPERLY DISPOSED OF OFFSITE.
8. ONCE CONCRETE WASTES ARE WASHED INTO THE DESIGNATED AREA AND ALLOWED TO HARDEN, THE CONCRETE SHOULD BE BROKEN UP, REMOVED, AND DISPOSED OF PER PROPER WASTE MANAGEMENT PROCEDURES. DISPOSE OF HARDENED CONCRETE ON A REGULAR BASIS.

WASTE COLLECTION AREA

1. WATER TIGHT DUMPSTERS OF SUFFICIENT SIZE AND NUMBER SHALL BE PROVIDED TO CONTAIN THE SOLID WASTE GENERATED BY THE PROJECT AND SHALL BE PROPERLY SERVICED.
2. LITTERING ON THE PROJECT SITE SHALL BE PROHIBITED.
3. TRASH RECEPTACLES SHALL BE PROVIDED IN FIELD TRAILER AREAS AND IN LOCATIONS WERE WORKERS CONGREGATE FOR LUNCH AND BREAK PERIODS.
4. CONSTRUCTION DEBRIS AND LITTER FROM WORK AREAS WITHIN THE CONSTRUCTION LIMITS OF THE PROJECT SITE SHALL BE COLLECTED AND PLACED IN WATER TIGHT DUMPSTERS AT LEAST WEEKLY. COLLECTED LITTER OR DEBRIS SHALL NOT BE PLACED IN OR NEXT TO DRAIN INLETS, STORM WATER DRAINAGE SYSTEMS OR WATERCOURSES.
5. FULL DUMPSTERS SHALL BE REMOVED FROM THE PROJECT SITE AND THE CONTENTS SHALL BE DISPOSED OF AT A LEGALLY APPROVED LAND FILL LOCATION.
6. ALL DUMPSTERS SHALL BE HANDLED AND DISPOSED OF BY TRASH HAULING CONTRACTOR.
7. CONSTRUCTION DEBRIS AND WASTE SHALL BE REMOVED FROM THE SITE EVERY TWO WEEKS OR SOONER IF NEEDED.
8. STORM WATER RUN ON SHALL BE PREVENTED FROM CONTACTING STOCKPILED SOLID WASTE THROUGH THE USE OF BERMS OR OTHER TEMPORARY DIVERSION STRUCTURES OR THROUGH THE USE OF MEASURES TO ELEVATE WASTE FROM SURFACE.
9. WASTE STORED IN STOCKPILES SHALL BE SECURLY COVERED FROM WIND AND RAIN BY COVERING WASTE WITH TARPS OR PLASTIC SHEETING WHILE WAITING FOR OFF HAUL OR TRANSFER TO DUMPSTER.
10. SEGREGATE HAZARDOUS WASTE FROM NON-HAZARDOUS WASTE. FOR DISPOSAL OF HAZARDOUS WASTE SEE BMP WM-6. HAVE HAZARDOUS WASTE HAULED TO AN APPROPRIATE DISPOSAL FACILITY IMMEDIATELY AFTER DEMOLITION OR USE.
11. MAKE SURE THAT TOXIC LIQUID WASTES AND CHEMICALS ARE NOT DISPOSED OF IN DUMPSTERS BUT ARE REMOVED OFF SITE APPROPRIATELY.

MATERIAL DELIVERY AND STORAGE

1. LIQUIDS, PETROLEUM PRODUCTS, AND SUBSTANCES LISTED IN 40 CFR PARTS 110, 117, OR 302 SHOULD BE STORED IN APPROVED CONTAINERS AND DRUMS AND SHOULD NOT BE OVERFILLED. CONTAINERS AND DRUMS SHOULD BE PLACED IN TEMPORARY CONTAINMENT FACILITIES FOR STORAGE.
2. TEMPORARY CONTAINMENT FACILITY SHOULD PROVIDE FOR A SPILL CONTAINMENT VOLUME ABLE TO CONTAIN PRECIPITATION FROM A 25 YEAR STORM EVENT, PLUS THE AGGREGATE VOLUME OF ALL CONTAINERS OR 100% OF THE CAPACITY OF THE LARGEST CONTAINER WITHIN ITS BOUNDARY, WHICHEVER IS GREATER.
3. A TEMPORARY CONTAINMENT FACILITY SHOULD BE IMPERVIOUS TO THE MATERIALS STORED THEREIN FOR A MINIMUM CONTACT TIME OF 72 HOURS.
4. A TEMPORARY CONTAINMENT FACILITY SHOULD BE MAINTAINED FREE OF ACCUMULATED RAINWATER AND SPILLS. IN THE EVENT OF SPILLS OR LEAKS, ACCUMULATED RAINWATER SHOULD BE COLLECTED AND PLACED INTO DRUMS. THESE LIQUIDS SHOULD BE HANDLED AS A HAZARDOUS WASTE UNLESS TESTING DETERMINES THEM TO BE NON-HAZARDOUS. ALL COLLECTED LIQUIDS OR NON-HAZARDOUS LIQUIDS SHOULD BE SENT TO AN APPROVED DISPOSAL SITE.
5. SUFFICIENT SEPARATION SHOULD BE PROVIDED BETWEEN STORED CONTAINERS TO ALLOW FOR SPILL CLEANUP AND EMERGENCY RESPONSE ACCESS.
6. INCOMPATIBLE MATERIALS, SUCH AS CHLORINE AND AMMONIA, SHOULD NOT BE STORED IN THE SAME TEMPORARY CONTAINMENT FACILITY.
7. THROUGHOUT THE RAINY SEASON, EACH TEMPORARY CONTAINMENT FACILITY SHOULD BE COVERED DURING NON-WORKING DAYS, PRIOR TO, AND DURING RAIN EVENTS.
8. MATERIALS SHOULD BE STORED IN THEIR ORIGINAL CONTAINERS AND THE ORIGINAL PRODUCT LABELS SHOULD BE MAINTAINED IN PLACE IN A LEGIBLE CONDITION. DAMAGED OR OTHERWISE ILLEGIBLE LABELS SHOULD BE REPLACED IMMEDIATELY.
9. BAGGED AND BOXED MATERIALS SHOULD BE STORED ON PALLETS AND SHOULD NOT BE ALLOWED TO ACCUMULATE ON THE GROUND. TO PROVIDE PROTECTION FROM WIND AND RAIN THROUGHOUT THE RAINY SEASON, BAGGED AND BOXED MATERIALS SHOULD BE COVERED DURING NON-WORKING DAYS AND PRIOR TO AND DURING RAIN EVENTS.
10. STOCKPILES SHOULD BE PROTECTED IN ACCORDANCE WITH CALIFORNIA STORM WATER QUALITY HANDBOOK CONSTRUCTION PRACTICES WM-3, STOCKPILE MANAGEMENT.
11. MATERIALS SHOULD BE STORED INDOORS WITHIN EXISTING STRUCTURES OR SHEDS WHEN AVAILABLE.
12. PROPER STORAGE INSTRUCTIONS SHOULD BE POSTED AT ALL TIMES IN AN OPEN AND CONSPICUOUS LOCATIONS.
13. AN AMPLE SUPPLY OF APPROPRIATE SPILL CLEAN MATERIAL SHOULD BE KEPT NEAR STORAGE AREAS.
14. KEEP AN ACCURATE, UP-TO-DATE INVENTORY OF MATERIAL DELIVERED AND STORED ONSITE.
15. ARRANGE FOR EMPLOYEES TRAINED IN EMERGENCY SPILL CLEANUP PROCEDURES TO BE PRESENT WHEN DANGEROUS MATERIALS OR LIQUID CHEMICALS ARE UNLOADED.

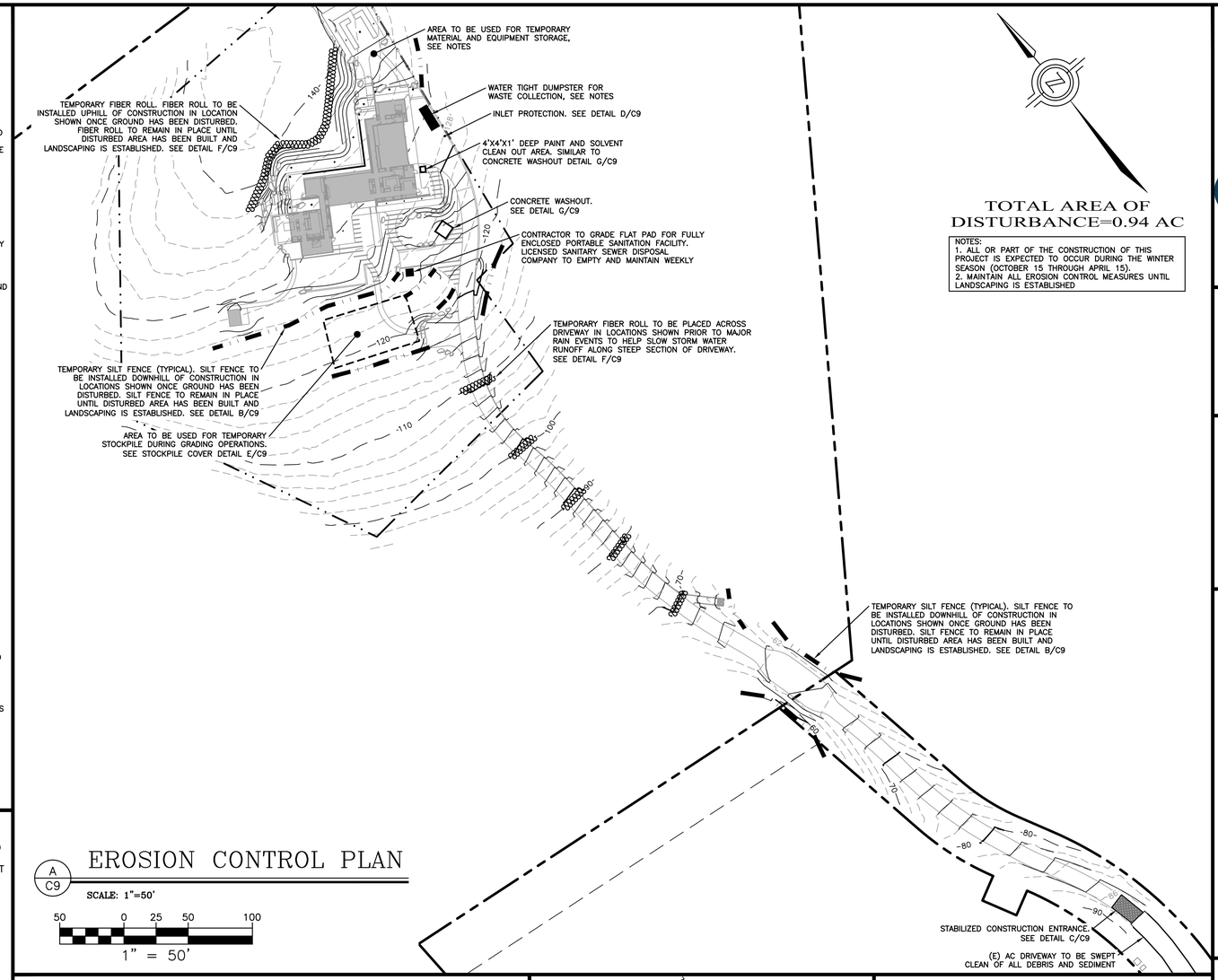

TOTAL AREA OF DISTURBANCE=0.94 AC

NOTES:
1. ALL OR PART OF THE CONSTRUCTION OF THIS PROJECT IS EXPECTED TO OCCUR DURING THE WINTER SEASON (OCTOBER 15 THROUGH APRIL 15).
2. MAINTAIN ALL EROSION CONTROL MEASURES UNTIL LANDSCAPING IS ESTABLISHED

EROSION CONTROL PLAN

A / C9

SCALE: 1"=50'

50 0 25 50 100

1" = 50'

TO BE USED DOWN SLOPE OF EXPOSED SOIL AREAS AND AROUND TEMPORARY SOIL STOCKPILES.

INSTALLATION

1. SET 4' LONG 2"x2" WOOD (OR 1.33 PLF STEEL) POSTS AS SHOWN. EXCAVATE A 4"x4" TRENCH UP SLOPE ALONG THE LINE OF POSTS.
2. ATTACH SILT FENCE TO POSTS PER MANUFACTURER'S SPECIFICATIONS. EXTEND FABRIC INTO TRENCH.
3. BACKFILL TRENCH AND HAND COMPACT EXCAVATED SOIL.

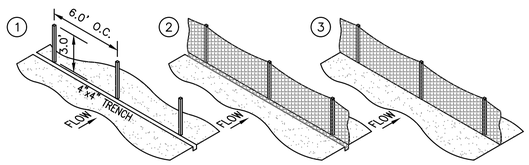

SILT FENCE DETAIL

B / C9

NTS

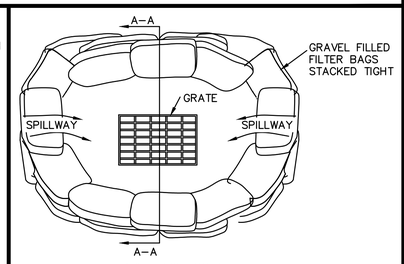

PLAN VIEW

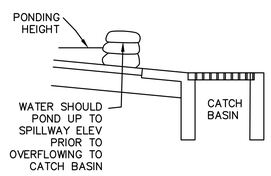

SECTION A-A

INSTALLATION

1. PERVIOUS BURLAP BAGS OR SYNTHETIC NET BAGS 24" LONG BY 12" WIDE BY 6" HIGH TO BE USED. FILTER BAGS SHALL CONTAIN 1" TO 2" DIAMETER ROCK. BAGS SHOULD BE STACKED TIGHTLY AND SHOULD CREATE A SPILLWAY TO ALLOW WATER TO POND AND OVERFLOW TO CATCH BASIN.
2. CONFIGURATION SHOWN MAY NEED TO BE ADJUSTED TO ACCOMMODATE EXISTING CATCH BASIN AND FLOW ORIENTATION. CONTRACTOR TO ADJUST AS NEEDED TO ENSURE PROTECTION OF INLET AND MAINTAIN INTENT OF DETAIL SHOWN.

INLET PROTECTION

D / C9

NTS

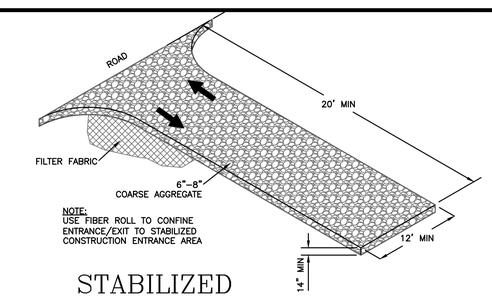

STABILIZED CONSTRUCTION ENTRANCE

C / C9

NTS

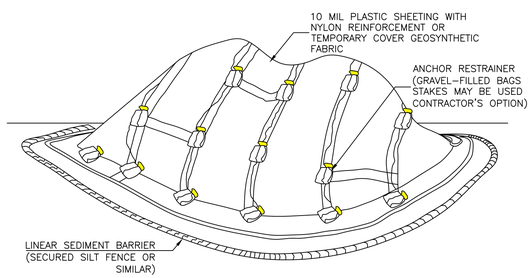

NOTES:
1. ALL STOCKPILES SHALL BE CONTAINED AND COVERED WHEN NOT ACTIVE, AND SECURED AT THE END OF EACH DAY.
2. STOCKPILES SHALL BE SECURELY COVERED OVERNIGHT, AND PRIOR TO, DURING, AND AFTER RAIN EVENTS.
3. NO MATERIAL SHALL LEAVE THE SITE OR MOVE INTO STREET.
4. PLASTIC SHEETING HAS LIMITATIONS DUE TO SUNLIGHT BREAKDOWN, HARD TO MANAGE IN WINDY CONDITIONS, AND CAN INCREASE RUNOFF ISSUE FOR PERIMETER CONTROLS. INSPECT FREQUENTLY OR USE GEOSYNTHETIC FABRIC AS APPLICABLE.
5. DO NOT LOCATE WITHIN 50 FEET OF A STORM DRAIN.

STOCKPILE COVER DETAIL

E / C9

NTS

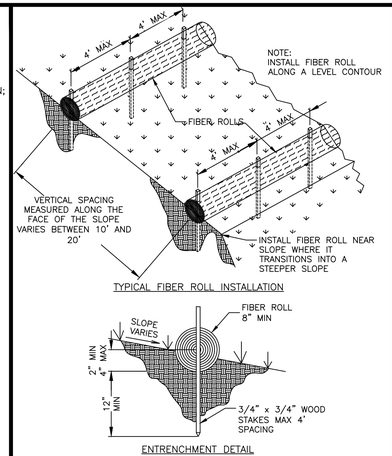

TYPICAL FIBER ROLL INSTALLATION

ENTRENCHMENT DETAIL

FIBER ROLL DETAIL

F / C9

NTS

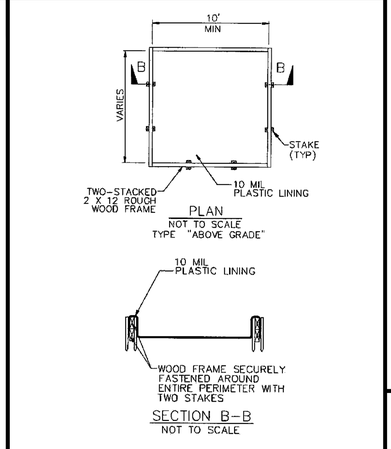

PLAN
NOT TO SCALE
TYPE "ABOVE GRADE"

SECTION B-B
NOT TO SCALE

CONCRETE WASHOUT

G / C9

NTS

L&S ENGINEERING AND SURVEYING, INC
2460 Garden Road, Suite G, Monterey, California 93940
P: 831 655.2722 F: 831 655.3425
LandSengineers.com

REGISTERED PROFESSIONAL ENGINEER
CHRISTOPHER J. SCHULTZ
No. 59685
EXP. 12-31-25
CIVIL
STATE OF CALIFORNIA

DRAWN BY: MRS
DESIGNED BY: MRS
DATE: 1-22-2025
SCALE: AS SHOWN
JOB NUMBER: 24-07
LAST REVISED: N/A
REVISED BY: N/A

EROSION CONTROL PLAN

SERWIN RESIDENCE
24 TEHAMA
CARMEL, CALIFORNIA 93923
(TEHAMA LOT 10)
APN 169-421-045

SHEET C9
OF
10 SHEETS

CONSTRUCTION COORDINATOR

CONTRACTOR SHALL PROVIDE A CONSTRUCTION COORDINATOR THAT CAN BE CONTACTED DURING CONSTRUCTION, SHOULD QUESTIONS ARISE DURING CONSTRUCTION (IN CASE OF BOTH REGULAR INQUIRES AND IN EMERGENCIES). THEIR CONTACT INFORMATION (INCLUDING THEIR ADDRESS AND 24-HOUR PHONE NUMBER) SHALL BE CONSPICUOUSLY POSTED AT THE JOB SITE IN A MANNER THAT THE CONTACT INFORMATION IS READILY VISIBLE FROM PUBLIC VIEWING AREAS. A COPY OF THAT SAME CONTACT INFORMATION SHOULD ALSO BE GIVEN TO THE TEHAMA ROAD COMPANY PRIOR TO START OF CONSTRUCTION. THE POSTING SHALL INDICATE THAT THE CONSTRUCTION COORDINATOR SHOULD BE CONTACTED TO ANSWER ANY QUESTIONS THAT ARISE DURING CONSTRUCTION (IN CASE OF BOTH REGULAR INQUIRES AND IN EMERGENCIES). THE CONSTRUCTION COORDINATOR SHALL RECORD THE NAME, PHONE NUMBER AND NATURE OF ALL COMPLAINTS (IF ANY) RECEIVED DURING CONSTRUCTION, AND SHALL INVESTIGATE COMPLAINTS AND TAKE REMEDIAL ACTION, IF NECESSARY, WITHIN 24-HOURS OF RECEIPT OF THE COMPLAINT OR INQUIRY.

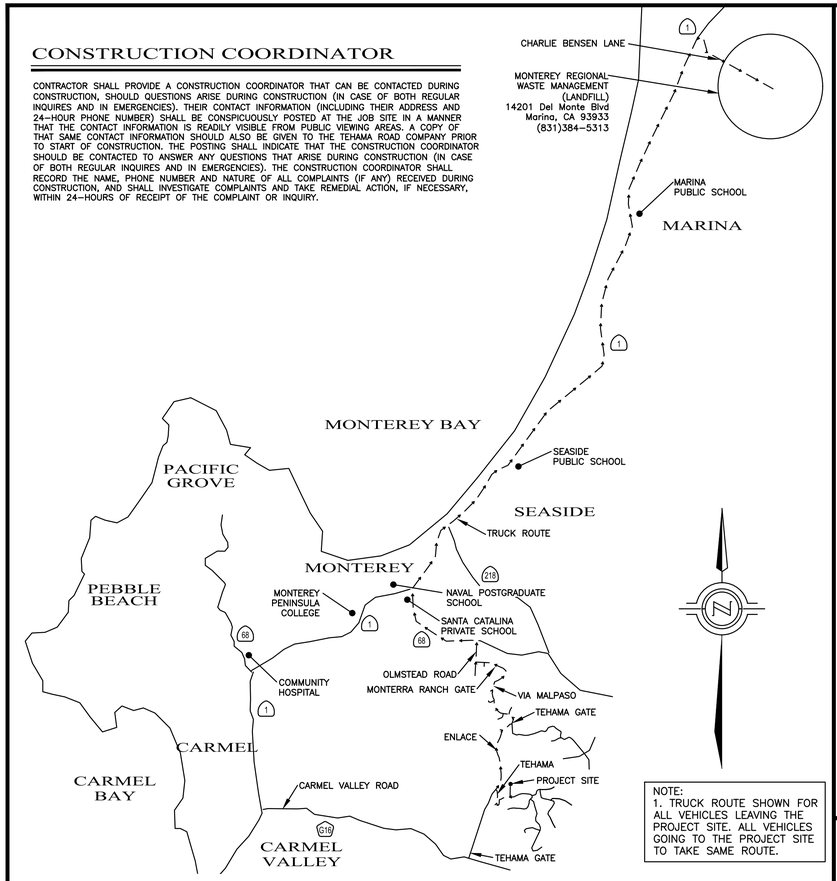

NOTE:
1. TRUCK ROUTE SHOWN FOR ALL VEHICLES LEAVING THE PROJECT SITE. ALL VEHICLES GOING TO THE PROJECT SITE TO TAKE SAME ROUTE.

A / C10

VICINITY MAP/OVERALL TRUCK ROUTING PLAN

1"=6000'

CONSTRUCTION NOTES

1. ALL WORK SHALL TAKE PLACE DURING DAYLIGHT HOURS, MONDAY – FRIDAY, 8AM TO 5PM (EXCLUDING NATIONAL HOLIDAYS)
2. THE SIGNED PERMITS AND THE APPROVED CONSTRUCTION PLANS SHALL BE MAINTAINED IN A CONSPICUOUS LOCATION AT THE CONSTRUCTION JOB SITE AT ALL TIMES, AND THAT SUCH COPIES ARE AVAILABLE FOR AGENCY REVIEW ON REQUEST. ALL PERSONS INVOLVED WITH THE CONSTRUCTION SHALL BE BRIEFED ON THE CONTENT AND MEANING OF THE PERMITS AND THE APPROVED CONSTRUCTION PLANS, AND THE PUBLIC REVIEW REQUIREMENTS APPLICABLE TO THEM, PRIOR TO COMMENCEMENT OF CONSTRUCTION.
3. STOP WORK WITHIN 50 METERS (165 FT) OF UNCOVERED RESOURCE AND CONTACT MONTEREY COUNTY HCD-PLANNING AND A QUALIFIED ARCHAEOLOGIST IMMEDIATELY IF CULTURAL, ARCHAEOLOGICAL, HISTORICAL OR PALEONTOLOGICAL RESOURCES ARE UNCOVERED. WHEN CONTACTED, THE PROJECT PLANNER AND THE ARCHAEOLOGIST SHALL IMMEDIATELY VISIT THE SITE TO DETERMINE THE EXTENT OF THE RESOURCES AND TO DEVELOP PROPER MITIGATION MEASURES REQUIRED FOR THE DISCOVERY.
4. EQUIPMENT WASHING, REFUELING AND SERVICING SHALL TAKE PLACE ONLY ONSITE. APPROPRIATE BEST MANAGEMENT PRACTICES SHALL BE USED TO ENSURE THAT NO SPILLS OF PETROLEUM PRODUCTS OR OTHER CHEMICALS TAKE PLACE DURING THESE ACTIVITIES. SEE BMP HANDOUT ON THIS SHEET.
5. THE CONSTRUCTION SITE SHALL MAINTAIN GOOD CONSTRUCTION SITE HOUSEKEEPING CONTROLS AND PROCEDURES (E.G. CLEANUP ALL LEAKS, DRIPS, AND OTHER SPILLS IMMEDIATELY; KEEP MATERIALS COVERED AND OUT OF THE RAIN, INCLUDING COVERING EXPOSED PILES OF SOIL AND WASTES; DISPOSE OF ALL WASTES PROPERLY, PLACE TRASH RECEPTACLES ON SITE FOR THAT PURPOSE, AND COVER OPEN TRASH RECEPTACLES DURING WET WEATHER). SEE BMP HANDOUT ON THIS SHEET.
6. ALL EROSION AND SEDIMENT CONTROLS SHALL BE IN PLACE PRIOR TO THE COMMENCEMENT OF CONSTRUCTION AS WELL AS AT THE END OF EACH WORKDAY. AT A MINIMUM, SILT FENCES, OR EQUIVALENT APPARATUS, SHALL BE INSTALLED AT THE PERIMETER OF THE CONSTRUCTION SITE TO PREVENT CONSTRUCTION-RELATED RUNOFF AND/OR SEDIMENT FROM LEAVING THE SITE.
7. THE CONTRACTOR SHALL IMPLEMENT THE FOLLOWING MEASURES TO CONTROL FUGITIVE DUST EMISSIONS DURING CONSTRUCTION

(MM AQ C1 – DUST CONTROL):

1. WATER ALL ACTIVE CONSTRUCTION AREAS AT LEAST TWICE DAILY. FREQUENCY SHOULD BE BASED ON THE TYPE OF OPERATION, SOIL, AND WIND EXPOSURE. – NOT APPLICABLE TO SITE
2. PROHIBIT ALL GRADING ACTIVITIES DURING PERIODS OF HIGH WIND MORE THAN 15 MILES PER HOUR.
3. APPLY CHEMICAL SOIL STABILIZERS ON INACTIVE CONSTRUCTION AREAS SUCH AS DISTURBED LANDS WITHIN CONSTRUCTION PROJECTS THAT ARE UNUSED FOR AT LEAST FOUR CONSECUTIVE DAYS. – NOT APPLICABLE TO SITE
4. APPLY NON-TOXIC BINDERS LIKE LATEX ACRYLIC COPOLYMER TO EXPOSED AREAS AFTER CUT AND FILL OPERATIONS AND HYDROSEED AREA. – NOT APPLICABLE TO SITE
5. MAINTAIN AT LEAST 2 FEET OF FREEBOARD ON HAUL TRUCKS.
6. COVER ALL TRUCKS HAULING DIRT SAND OR LOOSE MATERIALS.
7. PLANT TREE WINDBREAKS ON THE WINDWARD PERIMETER OF CONSTRUCTION PROJECTS IF ADJACENT TO OPEN LAND, PRIOR TO CONSTRUCTION. –NOT APPLICABLE TO SITE
8. PLANT VEGETATIVE GROUND COVER IN DISTURBED AREAS AS SOON AS POSSIBLE.
9. COVER INACTIVE STORAGE PILES.
10. INSTALL WHEEL WASHERS AT THE ENTRANCE TO CONSTRUCTION SITES FOR ALL EXITING TRUCKS – NOT APPLICABLE TO SITE
11. PAVE ALL ROADS ON CONSTRUCTION SITES PRIOR TO USE BY CONSTRUCTION EQUIPMENT – NOT APPLICABLE TO SITE
12. SWEEP STREETS IF VISIBLE SOIL MATERIAL IS CARRIED OUT FROM THE CONSTRUCTION SITE.
13. POST A PUBLICLY VISIBLE SIGN THAT SPECIFIES THE TELEPHONE NUMBER AND PERSON TO CONTACT REGARDING DUST COMPLAINTS. THIS PERSON WILL RESPOND TO COMPLAINTS AND TAKE CORRECTIVE ACTION WITHIN 48 HOURS. THE PHONE NUMBER OF THE MBUAPCD WILL BE VISIBLE TO ENSURE COMPLIANCE WITH RULE 402 NUISANCE.
14. LIMIT THE AREA UNDER CONSTRUCTION AT ANY ONE TIME.

THE CONSTRUCTION CONTRACTOR WILL ENSURE THESE MEASURES ARE IMPLEMENTED DURING CONSTRUCTION AS VERIFIABLE UPON COUNTY INSPECTION.

8. THE CONTRACTOR WILL ENSURE THAT ALL STATIONARY NOISE GENERATING EQUIPMENT, SUCH AS PUMPS AND GENERATORS ARE LOCATED AS FAR AS POSSIBLE FROM NEARBY NOISE SENSITIVE RECEPTORS AS PRACTICABLE. WHERE POSSIBLE, NOISE GENERATING EQUIPMENT WILL BE SHIELDED FROM NEARBY NOISE SENSITIVE RECEPTORS BY NOISE ATTENUATING BUFFERS SUCH AS STRUCTURES OR HAUL TRUCK TRAILERS. STATIONARY NOISE SOURCES LOCATED CLOSER THAN 500 FEET FROM NOISE SENSITIVE RECEPTORS WILL BE EQUIPPED WITH NOISE REDUCING ENGINE HOUSINGS. PORTABLE ACOUSTIC BARRIERS WILL BE PLACED AROUND NOISE GENERATING EQUIPMENT LOCATED WITHIN 200 FEET OF RESIDENCES. WATER TANKS AND EQUIPMENT STORAGE, STAGING, AND WARM-UP AREAS WILL BE LOCATED AS FAR FROM NOISE SENSITIVE RECEPTORS AS POSSIBLE.
9. THE CONTRACTOR WILL ENSURE ALL CONSTRUCTION EQUIPMENT POWERED BY GASOLINE OR DIESEL ENGINES HAS SOUND CONTROL DEVICES AT LEAST AS EFFECTIVE AS THOSE ORIGINALLY PROVIDED BY THE MANUFACTURER. NO EQUIPMENT WILL BE PERMITTED TO HAVE AN UNMUFFLED EXHAUST.
10. THE APPLICANT WILL ENSURE THE CONSTRUCTION SPECIFICATIONS SPECIFY THAT ANY MOBILE NOISE-GENERATING EQUIPMENT OR MACHINERY IS SHUT OFF WHEN NOT IN USE. THESE REQUIREMENTS WILL BE INCLUDED IN ALL RELEVANT CONSTRUCTION CONTRACTS AND SHOWN ON CONSTRUCTION PLANS, AND WILL BE IMPLEMENTED DURING CONSTRUCTION.
11. THE CONTRACTOR TO ENSURE THAT CONSTRUCTION VEHICLES ACCESSING THE SITE USE THE SHORTEST POSSIBLE ROUTE TO AND FROM LOCAL FREEWAYS, PROVIDED THE ROUTES DO NOT EXPOSE ADDITIONAL RECEPTORS TO NOISE. SEE APPROVED TRUCK ROUTE ON THIS SHEET.
12. THE APPLICANT AND THE CONTRACTOR WILL ENSURE THAT RESIDENTS WITHIN 500 FEET OF THE CONSTRUCTION AREA ARE NOTIFIED OF THE CONSTRUCTION SCHEDULE IN WRITING BEFORE CONSTRUCTION BEGINS.

CONSTRUCTION BEST MANAGEMENT PRACTICES (BMPs)

Construction Projects Are Required to Implement the Stormwater Best Management Practices (BMP) on this Page, as they Apply to Your Project, All Year Long



MATERIALS & WASTE MANAGEMENT

Non-Hazardous Materials

- ☐ Berm and cover stockpiles of sand, dirt or other construction material with tarps when rain is forecast or if not actively being used within 14 days.
- ☐ Use (but don't overuse) reclaimed water for dust control.

Hazardous Materials

- ☐ Label all hazardous materials and hazardous wastes (such as pesticides, paints, thinners, solvents, fuel, oil, and antifreeze) in accordance with city, county, state and federal regulations.
- ☐ Store hazardous materials and wastes in water tight containers, store in appropriate secondary containment, and cover them at the end of every work day or during wet weather or when rain is forecast.
- ☐ Follow manufacturer's application instructions for hazardous materials and be careful not to use more than necessary. Do not apply chemicals outdoors when rain is forecast within 24 hours.
- ☐ Arrange for appropriate disposal of all hazardous wastes.

Waste Management

- ☐ Cover waste disposal containers securely with tarps at the end of every work day and during wet weather.
- ☐ Check waste disposal containers frequently for leaks and to make sure they are not overfilled. Never hose down a dumpster on the construction site.
- ☐ Clean or replace portable toilets, and inspect them frequently for leaks and spills.
- ☐ Dispose of all wastes and debris properly. Recycle materials and wastes that can be recycled (such as asphalt, concrete, aggregate base materials, wood, gyp board, pipe, etc.)
- ☐ Dispose of liquid residues from paints, thinners, solvents, glues, and cleaning fluids as hazardous waste.

Construction Entrances and Perimeter

- ☐ Establish and maintain effective perimeter controls and stabilize all construction entrances and exits to sufficiently control erosion and sediment discharges from site and tracking off site.
- ☐ Sweep or vacuum any street tracking immediately and secure sediment source to prevent further tracking. Never hose down streets to clean up tracking.



EQUIPMENT MANAGEMENT & SPILL CONTROL

Maintenance and Parking

- ☐ Designate an area, fitted with appropriate BMPs, for vehicle and equipment parking and storage.
- ☐ Perform major maintenance, repair jobs, and vehicle and equipment washing off site.
- ☐ If refueling or vehicle maintenance must be done onsite, work in a bermed area away from storm drains and over a drip pan big enough to collect fluids. Recycle or dispose of fluids as hazardous waste.
- ☐ If vehicle or equipment cleaning must be done onsite, clean with water only in a bermed area that will not allow rinse water to run into gutters, streets, storm drains, or surface waters.
- ☐ Do not clean vehicle or equipment onsite using soaps, solvents, degreasers, steam cleaning equipment, etc.

Spill Prevention and Control

- ☐ Keep spill cleanup materials (rags, absorbents, etc.) available at the construction site at all times.
- ☐ Inspect vehicles and equipment frequently for and repair leaks promptly. Use drip pans to catch leaks until repairs are made.
- ☐ Clean up spills or leaks immediately and dispose of cleanup materials properly.
- ☐ Do not hose down surfaces where fluids have spilled. Use dry cleanup methods (absorbent materials, cat litter, and/or rags).
- ☐ Sweep up spilled dry materials immediately. Do not try to wash them away with water, or bury them.
- ☐ Clean up spills on dirt areas by digging up and properly disposing of contaminated soil.
- ☐ Report significant spills immediately. You are required by law to report all significant releases of hazardous materials, including oil. To report a spill: 1) Dial 911 or your local emergency response number, 2) Call the Governor's Office of Emergency Services Warning Center, (800) 852-7550 (24 hours).

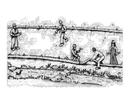

EARTHWORK & CONTAMINATED SOILS

Erosion Control

- ☐ Schedule grading and excavation work for dry weather only.
- ☐ Stabilize all denuded areas, install and maintain temporary erosion controls (such as erosion control fabric or bonded fiber matrix) until vegetation is established.
- ☐ Seed or plant vegetation for erosion control on slopes or where construction is not immediately planned.

Sediment Control

- ☐ Protect storm drain inlets, gutters, ditches, and drainage courses with appropriate BMPs, such as gravel bags, fiber rolls, berms, etc.
- ☐ Prevent sediment from migrating offsite by installing and maintaining sediment controls, such as fiber rolls, silt fences, or sediment basins.
- ☐ Keep excavated soil on the site where it will not collect into the street.
- ☐ Transfer excavated materials to dump trucks on the site, not in the street.
- ☐ Contaminated Soils
- ☐ If any of the following conditions are observed, test for contamination and contact the Regional Water Quality Control Board:
  - Unusual soil conditions, discoloration, or odor.
  - Abandoned underground tanks
  - Abandoned wells
  - Buried barrels, debris, or trash.



PAVING/ASPHALT WORK

- ☐ Avoid paving and seal coating in wet weather, or when rain is forecast before fresh pavement will have time to cure.
- ☐ Cover storm drain inlets and manholes when applying seal coat, tack coat, slurry seal, fog seal, etc.
- ☐ Collect and recycle or appropriately dispose of excess abrasive gravel or sand. Do NOT sweep or wash it into gutters.
- ☐ Do not use water to wash down fresh asphalt concrete pavement.

Sawcutting & Asphalt/Concrete Removal

- ☐ Completely cover or barricade storm drain inlets when saw cutting. Use filter fabric, catch basin inlet filters, or gravel bags to keep slurry out of the storm drain system.
- ☐ Shovel, absorb, or vacuum saw-cut slurry and dispose of all waste as soon as you are finished in one location or at the end of each work day (whichever is sooner!).
- ☐ If sawcut slurry enters a catch basin, clean it up immediately.



CONCRETE, GROUT & MORTAR APPLICATION

- ☐ Store concrete, grout and mortar under cover, on pallets and away from drainage areas. These materials must never reach a storm drain.
- ☐ Wash out concrete equipment/trucks offsite or in a contained area, so there is no discharge into the underlying soil or onto surrounding areas. Let concrete harden and dispose of as garbage.
- ☐ Collect the wash water from washing exposed aggregate concrete and remove it for appropriate disposal offsite.



LANDSCAPE MATERIALS

- ☐ Contain stockpiled landscaping materials by storing them under tarps when they are not actively being used.
- ☐ Stack erodible landscape material on pallets. Cover or store these materials when they are not actively being used or applied.
- ☐ Discontinue application of any erodible landscape material within 2 days before a forecast rain event or during wet weather.



PAINTING & PAINT REMOVAL

Painting cleanup

- ☐ Never clean brushes or rinse paint containers into a street, gutter, storm drain, or surface waters.
- ☐ For water-based paints, paint out brushes to the extent possible. Rinse to the sanitary sewer once you have gained permission from the local wastewater treatment authority. Never pour paint down a drain.
- ☐ For oil-based paints, paint out brushes to the extent possible and clean with thinner or solvent in a proper container. Filter and reuse thinners and solvents. Dispose of residue and unusable thinner/solvents as hazardous waste.

Paint Removal

- ☐ Chemical paint stripping residue and chips and dust from marine paints or paints containing lead or tributyltin must be disposed of as hazardous waste.
- ☐ Paint chips and dust from non-hazardous dry stripping and sand blasting may be swept up or collected in plastic drop cloths and disposed of as trash.



DEWATERING

- ☐ Effectively manage all run-on, all runoff within the site, and all runoff that discharges from the site. Divert run-on water from offsite away from all disturbed areas or otherwise ensure compliance.
- ☐ When dewatering, notify and obtain approval from the local municipality before discharging water to a street gutter or storm drain. Filtration or diversion through a basin, tank, or sediment trap may be required.
- ☐ In areas of known contamination, testing is required prior to reuse or discharge of groundwater. Consult with the Engineer to determine whether testing is required and how to interpret results. Contaminated groundwater must be treated or hauled off-site for proper disposal.

To Report a Spill: Call 911 or (831) 394-6811
If you see paint, cement. motor oil, antifreeze or other hazardous materials flowing into or being dumped into a storm drain, immediately call 911 to report it.

Additional Contact Numbers (Non-Emergency):

City of Carmel-by-the-Sea:	(831) 620-2000
City of Del Rey Oaks:	(831) 394-8511
City of Monterey:	(831) 646-3921
City of Pacific Grove:	(831) 648-5722
City of Sand City:	(831) 394-3054
City of Seaside:	(831) 899-6825
County of Monterey:	(831) 755-4800

STORM DRAIN POLLUTERS MAY BE LIABLE FOR FINES OF UP TO $10,000 PER DAY!

v.3 Oct 2015

ADDITIONAL NOTES:
1. THIS PROJECT SITE WILL EXPECT 2-10 WORKERS PER DAY.
2. THIS PROJECT SITE WILL EXPECT NO MORE THAN 5 TRUCK DELIVERIES PER DAY.
3. CONSTRUCTION PARKING WILL BE AT THE SITE WITHIN PROPOSED AREA

LEGEND

AREA OF FILL

AREA OF CUT

EARTHWORK QUANTITIES:
1260 CY CUT
540 CY FILL
720 CY CUT NET
* AT 5 TRUCK TRIPS PER DAY AND 10 CY PER TRUCK TRIP (50 CY/DAY) IT IS ESTIMATED THAT IT WILL TAKE 72 TRUCK TRIPS OR 15 DAYS TO EXPORT EXCESS CUT MATERIAL FROM SITE

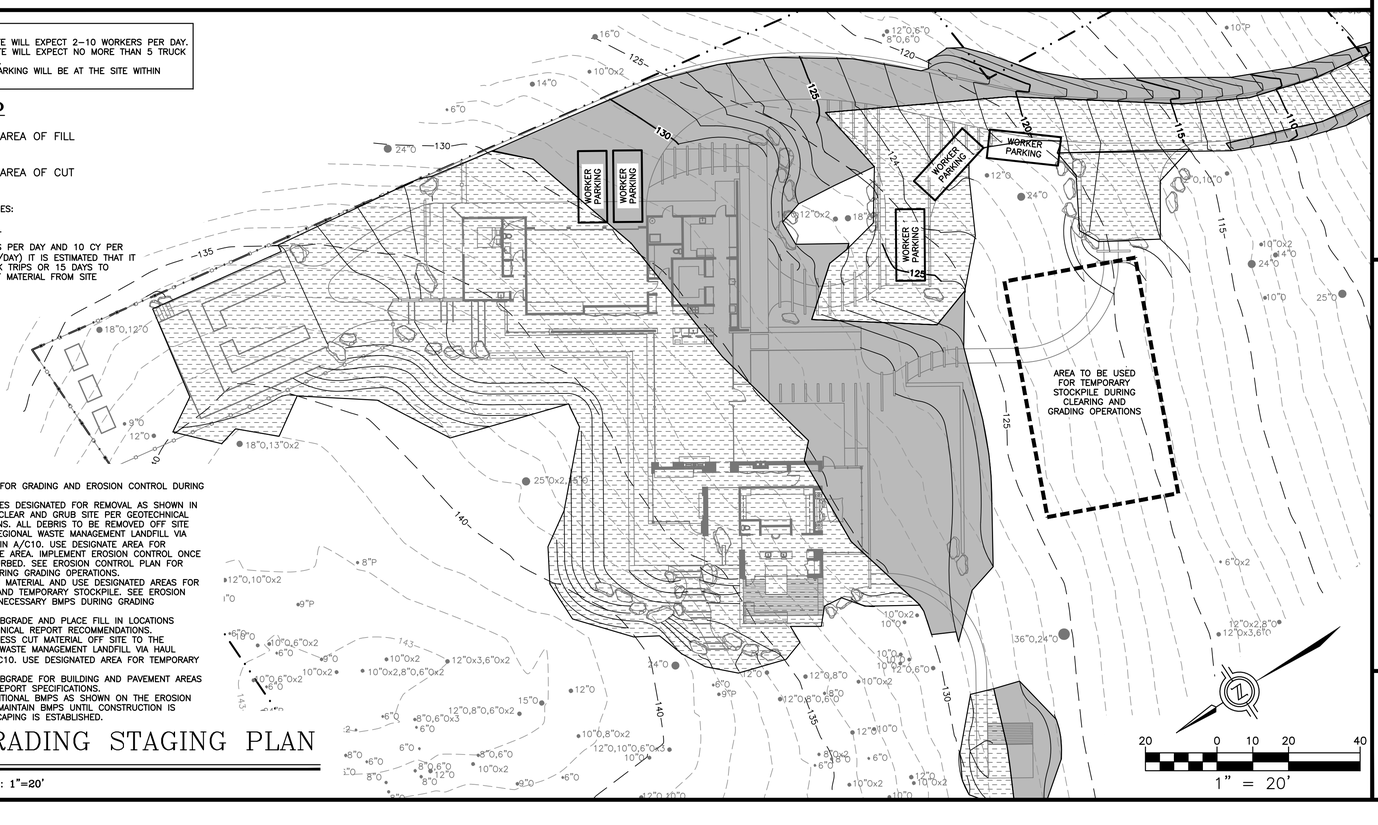

GRADING STAGING:
SEE GRADING PLANS FOR GRADING AND EROSION CONTROL DURING CONSTRUCTION.
STEP 1: REMOVE TREES DESIGNATED FOR REMOVAL AS SHOWN IN THIS PLAN SET AND CLEAR AND GRUB SITE PER GEOTECHNICAL REPORT SPECIFICATIONS. ALL DEBRIS TO BE REMOVED OFF SITE TO THE MONTEREY REGIONAL WASTE MANAGEMENT LANDFILL VIA HAUL ROUTE SHOWN IN A/C10. USE DESIGNATE AREA FOR TEMPORARY STOCKPILE AREA. IMPLEMENT EROSION CONTROL ONCE SITE HAS BEEN DISTURBED. SEE EROSION CONTROL PLAN FOR NECESSARY BMPS DURING GRADING OPERATIONS.
STEP 2: REMOVE CUT MATERIAL AND USE DESIGNATED AREAS FOR EQUIPMENT STAGING AND TEMPORARY STOCKPILE. SEE EROSION CONTROL PLAN FOR NECESSARY BMPS DURING GRADING OPERATIONS.
STEP 3: PREPARE SUBGRADE AND PLACE FILL IN LOCATIONS SHOWN PER GEOTECHNICAL REPORT RECOMMENDATIONS.
STEP 4: REMOVE EXCESS CUT MATERIAL OFF SITE TO THE MONTEREY REGIONAL WASTE MANAGEMENT LANDFILL VIA HAUL ROUTE SHOWN IN A/C10. USE DESIGNATED AREA FOR TEMPORARY STOCKPILE.
STEP 5: PREPARE SUBGRADE FOR BUILDING AND PAVEMENT AREAS PER GEOTECHNICAL REPORT SPECIFICATIONS.
STEP 6: INSTALL ADDITIONAL BMPS AS SHOWN ON THE EROSION CONTROL PLAN AND MAINTAIN BMPS UNTIL CONSTRUCTION IS FINISHED AND LANDSCAPING IS ESTABLISHED.

B / C10

GRADING STAGING PLAN

SCALE: 1"=20'

L&S ENGINEERING AND SURVEYING, INC
2460 Garden Road, Suite G, Monterey, California 93940
P: 831.655.2722 F: 831.655.3425
LandSengineers.com

REGISTERED PROFESSIONAL ENGINEER – CHRISTOPHER J. SIMONDS – No. 59685 – EXP. 12-31-25 – CIVIL – STATE OF CALIFORNIA

DRAWN BY: MRS
DESIGNED BY: MRS
DATE: 1-22-2025
SCALE: AS SHOWN
JOB NUMBER: 24-07
LAST REVISED: N/A
REVISED BY: N/A

CONSTRUCTION MANAGEMENT PLAN

SERWIN RESIDENCE
24 TEHAMA
CARMEL, CALIFORNIA 93923
(TEHAMA LOT 10)
APN 169-421-045

SHEET C10
OF
10 SHEETS

"I, MARIE GOULET, CERTIFY THAT THIS LANDSCAPING AND IRRIGATION PLAN COMPLIES WITH ALL MONTEREY COUNTY LANDSCAPING REQUIREMENTS INCLUDING USE OF NATIVE DROUGHT TOLERANT, NON-INVASIVE SPECIES, LIMITED TURF AND LOW FLOW, WATER CONSERVING IRRIGATION FIXTURES."

HILLTOP RESIDENCE

24 TEHAMA, CARMEL, CA 93923
APN #169-421-045

PERSPECTIVE RENDERING



ABBREVIATIONS

@	AT
ADA	AMERICANS WITH DISABILITIES ACT
ADJ	ADJACENT
BS	BOTTOM OF SURFACE
BW	BOTTOM OF WALL
CBC	CALIFORNIA BUILDING CODE
CL	CENTER LINE
CLR	CLEAR
CONC	CONCRETE
DI	DRAIN INLET
(E)	EXISTING
EJ	EXPANSION JOINT
EQ	EQUAL
FFE	FINISH FLOOR ELEVATION
FG	FINISH GRADE
FS	FINISH SURFACE
HP	HIGH POINT
INV	INVERT
LOW	LIMIT OF WORK
LP	LOW POINT
MAX	MAXIMUM
MH	MANHOLE
ML	MAINLINE
OC	ON CENTER
POB	POINT OF BEGINNING
QCV	QUICK COUPLER VALVE
RC	RELATIVE COMPACTION
RIM	RIM ELEVATION
SD	STORM DRAIN
TS	TOP OF SURFACE
TPZ	TREE PROTECTION ZONE
TW	TOP OF WALL
TYP	TYPICAL
UON	UNLESS OTHERWISE NOTED
VIF	VERIFY IN FIELD
W/	WITH

VICINITY MAP

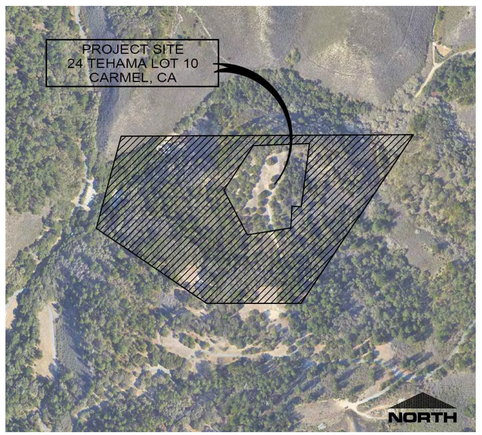

PROJECT SITE



PROJECT DESCRIPTION

THE LANDSCAPE FOR THE PROPOSED NEW RESIDENCE WILL CELBRATE THE OAK SAVANNA AND GRASSLANDS ALREADY PRESENT ON THE SITE. ALL PAVING AND HARDSCAPE MATERIALS HAVE BEEN SELECTED TO MAINTAIN THIS NATURAL AESTHETIC. THE PROJECT FEATURES NATIVE MEADOW GARDENS, 2 WATER FEATURES, OUTDOOR PATIOS, A VEGETABLE GARDEN AND A SMALL NO MOW LAWN TERRACE.

INDEX OF DRAWINGS

SHEET NUMBER	SHEET TITLE
L0.00	COVER SHEET
L0.01	SITE ANALYSIS
L0.02	TREE PROTECTION PLAN
L0.03	FUEL MANAGEMENT PLAN
L1.00	LANDSCAPE SITE PLAN
L2.00	PLANTING PLAN
L3.00	IRRIGATION DIAGRAM
L3.01	IRRIGATION LEGEND
L3.02	IRRIGATION DETAILS
L3.03	IRRIGATION DETAILS
L4.00	LANDSCAPE LIGHTING PLAN
L5.00	CONSTRUCTION DETAILS
L5.01	CONSTRUCTION DETAILS

NOT FOR CONSTRUCTION

ONLY THE ORIGINAL, SIGNED HARD COPY OF THIS DRAWING CONSTITUTES WILD LAND WORKSHOP'S PROFESSIONAL WORK PRODUCT. ELECTRONIC COPIES DO NOT. WILD LAND WORKSHOP WILL NOT BE RESPONSIBLE FOR ANY MODIFICATIONS MADE TO THIS DRAWING ELECTRONICALLY AFTER DOWNLOAD OR TRANSMITTAL. THE CONTRACTOR SHALL VERIFY THE LOCATIONS OF ALL EXISTING UTILITIES ON THE DRAWINGS, OR JOBSITE CONDITIONS WHICH PREVENT OR DELAY THE COMPLETION OF WORK AS INDICATED. THE CONTRACTOR SHALL NOTIFY THE OWNER AND LANDSCAPE ARCHITECT BY THE TIME OF BID OF ALL SUCH ERRORS, DISCREPANCIES AND OMISSIONS. THE CONTRACTOR SHALL ASSUME ALL RESPONSIBILITY FOR WORK PERFORMED AND MATERIALS PURCHASED BASED ON ERRONEOUS, INCOMPLETE OR INACCURATE INFORMATION SHOWN ON THE DRAWINGS, IF THE CONTRACTOR ENCOUNTERS ERRORS OR DISCREPANCIES ON THE DRAWINGS OR IN THE FIELD, HE SHALL NOTIFY THE OWNER AND LANDSCAPE ARCHITECT BY THE TIME OF BID OF ALL SUCH ERRORS, DISCREPANCIES AND OMISSIONS. THE CONTRACTOR SHALL ASSUME ALL RESPONSIBILITY FOR WORK PERFORMED AND MATERIALS PURCHASED BASED ON ERRONEOUS, INCOMPLETE OR INACCURATE INFORMATION SHOWN ON THE DRAWINGS.

WILD LAND WORKSHOP
LANDSCAPE ARCHITECTURE
MONTEREY CA (831)238-8459

LICENSED LANDSCAPE ARCHITECT
MARIE S GOULET
6335
06/30/2026
01/31/2025
Date
STATE OF CALIFORNIA

seal

ARCHITECT
SIGNUM ARCHITECTURE, LLP
1050 ADAMS STREET, SUITE D
ST. HELENA, CA 94574
707.963.8831

CIVIL ENGINEER
L&S ENGINEERING AND SURVEYING
2460 GARDEN ROAD, SUITE G
MONTEREY, CA 93940
831.655.2723

team

LISA AND BRAD SERWIN

owner

HILLTOP RESIDENCE

24 TEHAMA,
CARMEL, CA 93923

project

no.	description	date
3	PERMIT SET	01.31.2025
2	COORDINATION SET	12.04.2024
1	STEP 3 REVISION	08.23.2024

date: 01.22.2025

COVER SHEET

sheet title

L0.00

sheet no.

-- of

2/4/2025 10:00 AM

"I, MARIE GOULET, CERTIFY THAT THIS LANDSCAPING AND IRRIGATION PLAN COMPLIES WITH ALL MONTEREY COUNTY LANDSCAPING REQUIREMENTS INCLUDING USE OF NATIVE DROUGHT TOLERANT, NON-INVASIVE SPECIES, LIMITED TURF AND LOW FLOW, WATER CONSERVING IRRIGATION FIXTURES."



OBSERVED SPECIES LIST

BOTANICAL NAME	COMMON NAME
ACMISPON GLABER	DEERWEED
AGROSTIS PALLENS	SEASHORE BENTGRASS
ARTEMISIA CALIFORNICA	CALIFORNIA SAGEBRUSH
CAREX PANSA	SAND DUNE SEDGE
CLINOPODIUM DOUGLASI	YERBA BUENA
DANTHONIA CALIFORNICA	OAT GRASS
FRAGARIA CHILOENSIS	BEACH STRAWBERRY
HETEROMELES ARBUTIFOLIA	TOYON
JUNCUS PATENS	COMMON RUSH
LEYMUS CONDENSATUS	GIANT WILD RYE
MIMULUS AURANTIACUS	BUSH MONKEY FLOWER
RIBES CALIFORNICA	HILLSIDE GOOSEBERRY
SISYRINCHIUM BELLUM	BLUE EYED GRASS
STACHYS BULLATA	CALIFORNIA HEDGE NETTLE
STIPA CERNUA	NODDING NEEDLE GRASS
STIPA PULCHRA	PURPLE NEEDLE GRASS
TOXICODENDRON DIVERSILOBIUM	POISON OAK



20' 0 20 40'

1" = 20'

NOT FOR CONSTRUCTION

ONLY THE ORIGINAL, SIGNED HARD COPY OF THIS DRAWING CONSTITUTES WILD LAND WORKSHOP'S PROFESSIONAL WORK PRODUCT. ELECTRONIC COPIES DO NOT. WILD LAND WORKSHOP WILL NOT BE RESPONSIBLE FOR ANY MODIFICATIONS MADE TO THIS DRAWING ELECTRONIC OR OTHERWISE THAT IS NOT SIGNED BY WILD LAND WORKSHOP

IF THE CONTRACTOR ENCOUNTERS ERRORS OR DISCREPANCIES ON THE DRAWINGS, OR SITE CONDITIONS WHICH PREVENT OR DELAY THE COMPLETION OF WORK AS INDICATED, THE CONTRACTOR SHALL NOTIFY THE OWNER AND LANDSCAPE ARCHITECT BY THE TIME OF BID OF ALL SUCH ERRORS, DISCREPANCIES AND OMISSIONS. THE CONTRACTOR SHALL INDEMNIFY AND HOLD THE LANDSCAPE ARCHITECT AND THE OWNER HARMLESS IF AFTER CONTRACTING FOR THE WORK HE HAS MONETARY DAMAGE BECAUSE OF SITE CONDITIONS, ERRORS, DISCREPANCIES OR OMISSIONS AT THE TIME OF BID.

WILD LAND WORKSHOP
LANDSCAPE ARCHITECTURE
MONTEREY CA (831)238-8459

LICENSED LANDSCAPE ARCHITECT
MARIE S GOULET
6335
06/30/2026
01/31/2025
STATE OF CALIFORNIA

seal

ARCHITECT
SIGNUM ARCHITECTURE, LLP
1050 ADAMS STREET, SUITE D
ST. HELENA, CA 94574
707.963.8831

CIVIL ENGINEER
L&S ENGINEERING AND SURVEYING
2460 GARDEN ROAD, SUITE G
MONTEREY, CA 93940
831.655.2723

team

LISA AND BRAD SERWIN

owner

HILLTOP RESIDENCE

24 TEHAMA,
CARMEL, CA 93923

project

no.	description	date
3	PERMIT SET	01.31.2025
2	COORDINATION SET	12.04.2024
1	STEP 3 REVISION	08.23.2024

date: 01.22.2025

SITE ANALYSIS

sheet title

L0.01

sheet no.

-- of

2/4/2025 10:01 AM

"I, MARIE GOULET, CERTIFY THAT THIS LANDSCAPING AND IRRIGATION PLAN COMPLIES WITH ALL MONTEREY COUNTY LANDSCAPING REQUIREMENTS INCLUDING USE OF NATIVE DROUGHT TOLERANT, NON-INVASIVE SPECIES, LIMITED TURF AND LOW FLOW, WATER CONSERVING IRRIGATION FIXTURES."

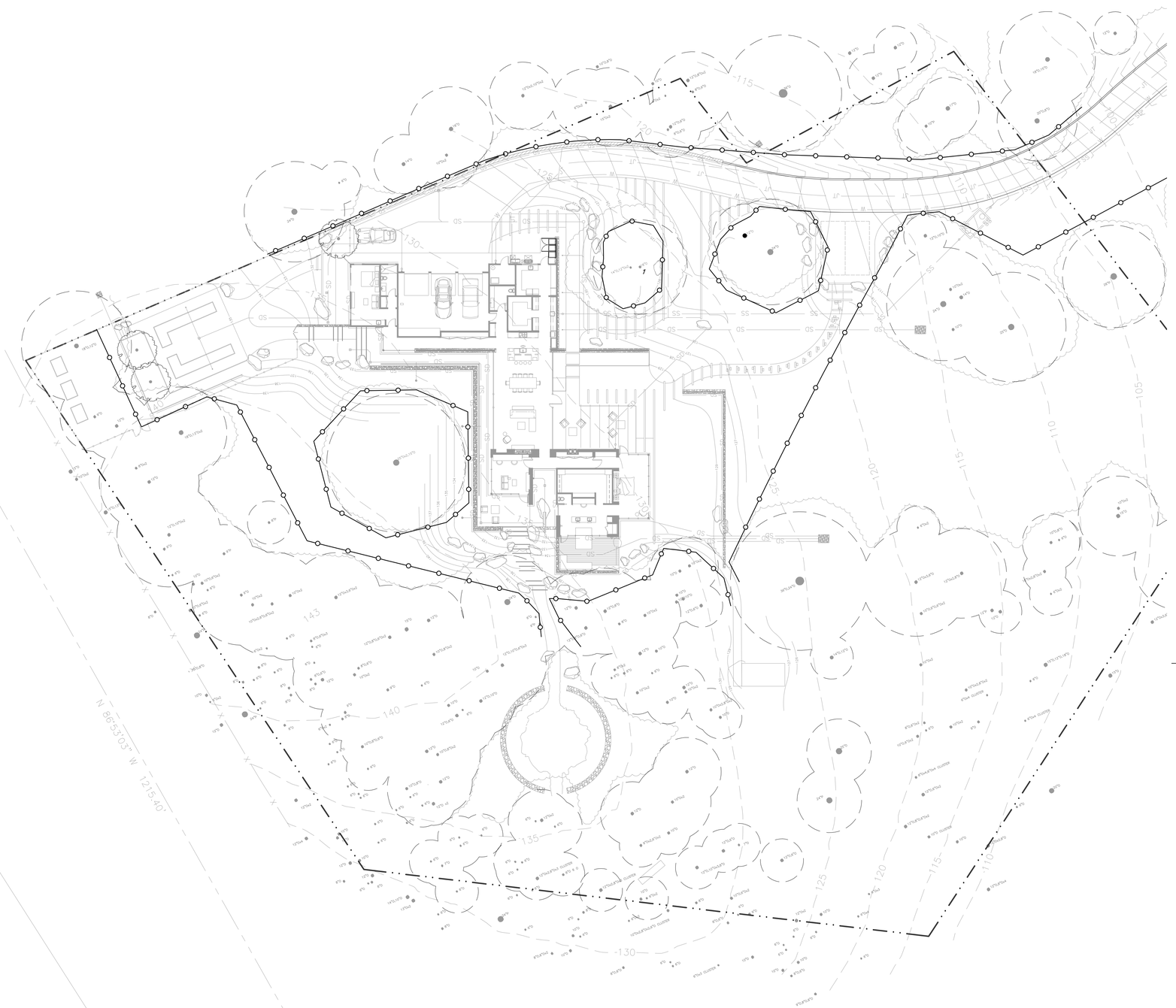

LEGEND

- EXISTING TREES TO REMAIN
- TREE PROTECTION ZONE
- TREE PROTECTION ZONE FENCING

NOTES:

1. A TREE PRESERVATION ZONE (TPZ) SHALL BE ESTABLISHED AS SHOWN ON PLAN AND AS VERIFIED IN THE FIELD WITH THE LANDSCAPE ARCHITECT.
2. PROTECTIVE FENCING - PER DETAIL THIS SHEET. FENCE SHALL BE INSTALLED PRIOR TO ANY CONSTRUCTION ACTIVITIES ON SITE. ONCE IN PLACE, FENCING SHALL NOT BE REMOVED WITHOUT THE CONSENT OF THE LANDSCAPE ARCHITECT.
3. NO STORAGE OF CONSTRUCTION EQUIPMENT, MATERIALS, TOOLS, DEBRIS OR EXCESS SOIL WILL BE ALLOWED WITHIN THE TPZ. SOLVENTS, LIQUIDS, CONCRETE WASH-OFF, OR ANY TYPE OF DEBRIS SHOULD BE DISPOSED OF PROPERLY, NEVER WITHIN THIS PROTECTED AREA.
4. ALL TRENCHING NEAR EXISTING TREES TO REMAIN. TREES SHALL BE HAND DUG AS REVIEWED WITH THE ARBORIST. WHEN LIVE ROOTS, 1 1/2-INCH DIAMETER OR LARGER ARE FOUND, THE WORK SHALL STOP. ROOTS SHALL BE COVERED WITH BURLAP OR MULCH, AND AN ARBORIST CONTACTED TO PROVIDE RECOMMENDATIONS ON ROOT CUTTING AND TREATMENT OF IMPACTED ROOTS PRIOR TO CONTINUING WORK.
5. NO SOIL COMPACTION SHALL OCCUR WITHIN THE TPZ. SOIL SURFACE WITHIN THE TPZ SHALL BE MULCHED WITH A 6-INCH LAYER OF AGED WOOD CHIPS. WOOD CHIPS FROM SITE TREE REMOVAL ARE ACCEPTABLE IF PROPERLY COMPOSTED. IMPORTED WOOD CHIP MULCH SHALL BE APPROVED BY THE LANDSCAPE ARCHITECT PRIOR TO ORDERING. THEN SUBMIT MULCH SAMPLES FOR APPROVAL PRIOR TO INSTALLATION. EXISTING PLANTS TO REMAIN.
6. NATURAL GRADE AROUND TPZ SHALL BE MAINTAINED. NO ADDITIONAL FILL OR EXCAVATION WILL BE PERMITTED WITHIN AREAS OF TREE ROOT DEVELOPMENT, UNLESS OTHERWISE SHOWN.
7. UNAUTHORIZED PRUNING OF ANY TREE SHALL NOT BE ALLOWED. IF ANY TREE CANOPY ENCROACHES ON THE PROJECT AREA, THE REQUIRED PRUNING WILL BE DONE WITH AUTHORITY OF OWNER/LANDSCAPE ARCHITECT AND TO INTERNATIONAL SOCIETY OF ARBORICULTURE GUIDELINES (ISA) AND AMERICAN NATIONAL STANDARDS INSTITUTE (ANSI) A-300 PRUNING STANDARDS.
8. CONTRACTOR TO SUBMIT SCHEDULE OF TREE PROTECTION FENCE INSTALLATION AND REMOVAL FOR REVIEW AND APPROVAL BY THE LANDSCAPE ARCHITECT PRIOR TO FENCE INSTALLATION OR REMOVAL.

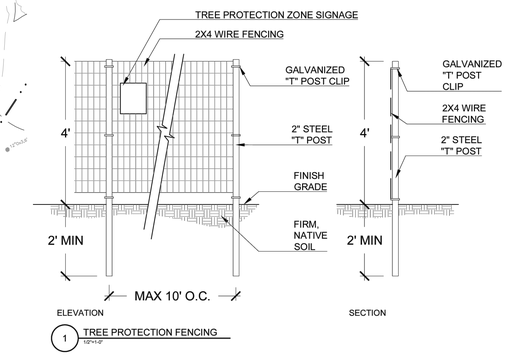

1 TREE PROTECTION FENCING
1/2"=1'-0"

20' 0 20 40'
1" = 20'

NOT FOR CONSTRUCTION

THE DRAWINGS, SPECIFICATIONS AND IDEAS, DESIGNS AND ARRANGEMENTS REPRESENTED THEREIN ARE AND SHALL REMAIN THE PROPERTY OF WILD LAND WORKSHOP AND WERE CREATED AND DEVELOPED FOR USE ON AND IN CONNECTION WITH THE SPECIFIED PROJECT. NONE OF SUCH IDEAS, DESIGNS, ARRANGEMENTS OR DRAWINGS MAY BE USED BY ANY PERSON OR ENTITY FOR ANY PURPOSE WHATSOEVER EXCEPT EXPRESSLY PURSUANT TO A WRITTEN AGREEMENT WITH WILD LAND WORKSHOP. ALL COMMON LAW, STATUTORY AND OTHER RESERVED RIGHTS, INCLUDING COPYRIGHT, TO THE DRAWINGS, IDEAS, DESIGNS AND ARRANGEMENTS REPRESENTED THEREIN ARE EXPRESSLY RESERVED BY WILD LAND WORKSHOP. IF THE CONTRACTOR ENCOUNTERS ERRORS OR DISCREPANCIES ON THE DRAWINGS, OR SITE CONDITIONS WHICH PREVENT OR DELAY THE COMPLETION OF WORK AS INDICATED, THE CONTRACTOR SHALL NOTIFY THE OWNER AND LANDSCAPE ARCHITECT BY THE TIME OF BID OF ALL SUCH ERRORS, DISCREPANCIES AND CONDITIONS. IF THE CONTRACTOR PROCEEDS WITH THE WORK WITHOUT MAKING SUCH NOTIFICATIONS, THE CONTRACTOR SHALL ASSUME ALL RESPONSIBILITY FOR ANY AND ALL RESULTING CONFLICTS OR DEFICIENCIES. ONLY THE ORIGINAL, SIGNED HARD COPY OF THIS DRAWING CONSTITUTES WILD LAND WORKSHOP'S PROFESSIONAL WORK PRODUCT. ELECTRONIC COPIES DO NOT. WILD LAND WORKSHOP WILL NOT BE RESPONSIBLE FOR ANY UNAUTHORIZED ALTERATIONS TO ANY DRAWING ELECTRONIC OR OTHERWISE THAT EXIST SIGNED BY WILD LAND WORKSHOP

WILD LAND WORKSHOP
LANDSCAPE ARCHITECTURE
MONTEREY CA (831)238-8459

REGISTERED LANDSCAPE ARCHITECT
MARIE S GOULET
6335
06/30/2026
01/31/2025
Date
STATE OF CALIFORNIA

seal

ARCHITECT
SIGNUM ARCHITECTURE, LLP
1050 ADAMS STREET, SUITE D
ST. HELENA, CA 94574
707.963.8831

CIVIL ENGINEER
L&S ENGINEERING AND SURVEYING
2460 GARDEN ROAD, SUITE G
MONTEREY, CA 93940
831.655.2723

team

LISA AND BRAD SERWIN
owner

HILLTOP RESIDENCE

24 TEHAMA,
CARMEL, CA 93923
project

no.	description	date
3	PERMIT SET	01.31.2025
2	COORDINATION SET	12.04.2024
1	STEP 3 REVISION	08.23.2024

date: 01.22.2025

TREE PROTECTION PLAN

sheet title

L0.02

sheet no.

-- of

2/4/2025 10:02 AM

"I, MARIE GOULET, CERTIFY THAT THIS LANDSCAPING AND IRRIGATION PLAN COMPLIES WITH ALL MONTEREY COUNTY LANDSCAPING REQUIREMENTS INCLUDING USE OF NATIVE DROUGHT TOLERANT, NON-INVASIVE SPECIES, LIMITED TURF AND LOW FLOW, WATER CONSERVING IRRIGATION FIXTURES."

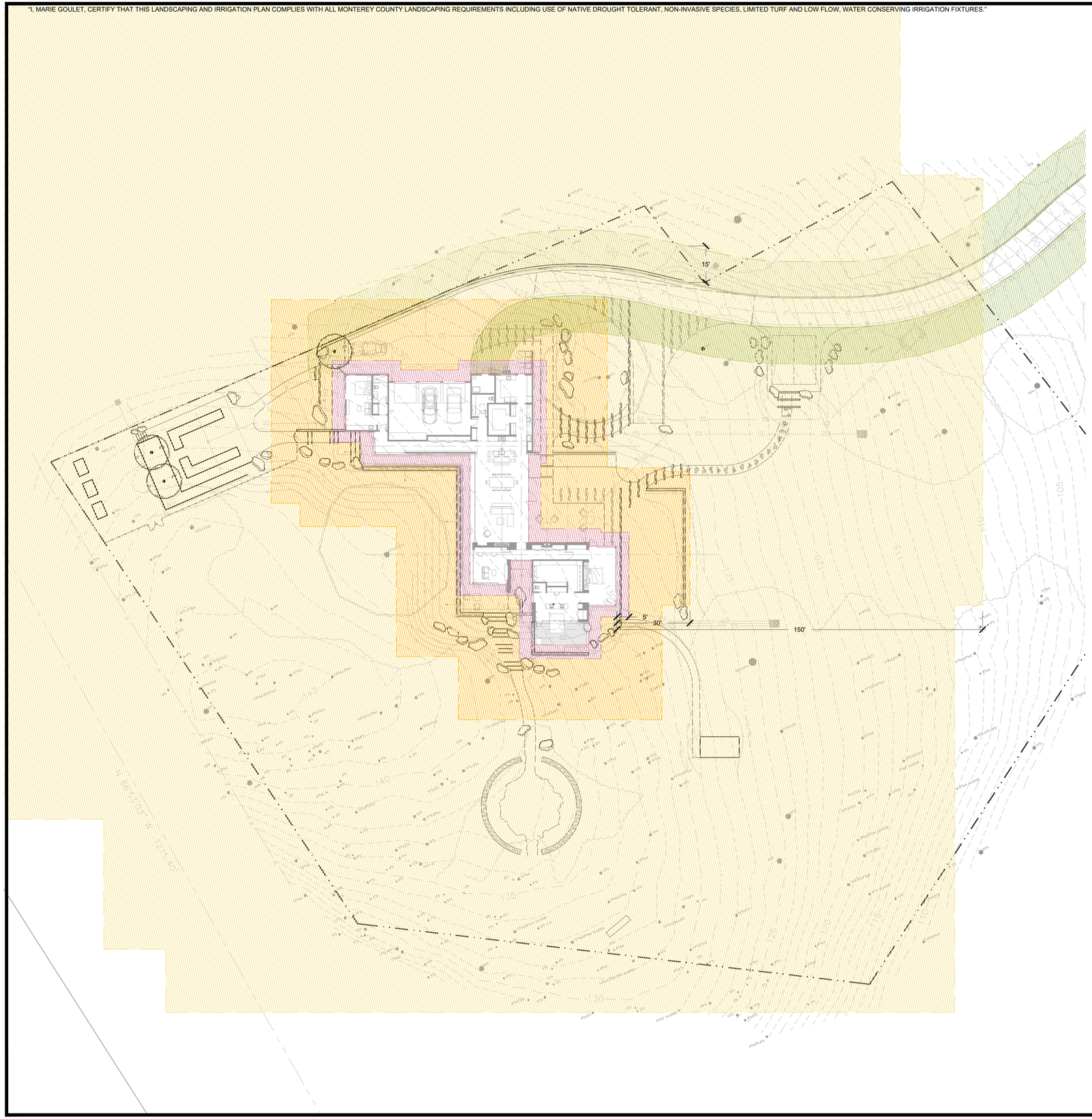

LEGEND

- NON-COMBUSTIBLE ZONE - WITHIN 5' OF STRUCTURES
- DRIVEWAY ZONE - WITHIN 15' OF PAVEMENT
- LANDSCAPE ZONE - WITHIN 30' OF STRUCTURES
- WOODLAND / CHAPARRAL / GRASSLAND ZONE - WITHIN 150' OF STRUCTURES

FUEL MANAGEMENT ZONE NOTES

1. NESTING SEASON - IF CLEARING IS TO BE DONE BETWEEN NOVEMBER 1ST AND AUGUST 1ST, A QUALIFIED ECOLOGIST/ORNITHOLOGIST SHALL CONDUCT A SITE WIDE SURVEY FOR NESTING BIRDS. IF ANY ARE FOUND A PROTECTION PLAN SHALL BE DEVELOPED AND FOLLOWED PRIOR TO PROCEEDING.
2. THE FOLLOWING FUEL MANAGEMENT ZONES (FMZ) SHALL BE ESTABLISHED AS SHOWN ON PLAN AND AS VERIFIED IN THE FIELD WITH LANDSCAPE ARCHITECT.
3. **NON-COMBUSTIBLE ZONE** - TO A DISTANCE OF 5 FEET, A NON-COMBUSTIBLE BUFFER OF 5 FEET AROUND STRUCTURES INCLUDING WOOD DECKS, CONSISTING OF HARDSCAPE SURFACES (SUCH AS PATIOS AND GRAVEL) OR BARE SOIL. WOOD CHIP MULCH AND IRRIGATED LAWNS ARE NOT CONSIDERED NON-COMBUSTIBLE.
4. **LANDSCAPE ZONE** - PER LANDSCAPING PLANS. ALL LANDSCAPING OCCURS WITHIN THE HOMELAND AREA. THE PLANTING OF FLAMMABLE SHRUBS AND ORNAMENTAL GRASSES IS DISCOURAGED IN THIS AREA. THE SPACING BETWEEN LANDSCAPING PLANTS AND VOLUME OF LANDSCAPING BIOMASS SHOULD MIMIC THE OAK WOODLAND / SAVANNAH ZONE. AVOID AND REGULARLY REMOVE THICK LAYERS OF MULCH AND LEAF LITTER. PRUNE SHRUBS REGULARLY TO MAINTAIN SPACE BETWEEN PLANTINGS.
5. **DRIVEWAY ZONE** - FOR A WIDTH OF 15 FEET FROM THE EDGE OF PAVEMENT. THIS AREA SHOULD BE TREATED TO REDUCE THE INTENSITY OF FIRE NEAR PAVEMENT TO ALLOW SAFE PASSAGE. ALL TREE BRANCHES EXTENDING OVER DRIVEWAY SURFACES MUST BE PRUNED TO ENSURE 15 FEET OF VERTICAL CLEARANCE, WHILE LEAVING HEALTHY BRANCHES HIGHER THAN 15 FEET TO PROVIDE SHADE. ALL GRASSLAND WITHIN 15 FEET OF THE PAVEMENT SHOULD BE MOWED ACCORDING TO THE GRASSLAND ZONE RECOMMENDATIONS. A MINIMUM OF 3 FEET RADIUS SHALL BE MOWED AROUND EACH FIRE HYDRANT. REMOVE UNDERSTORY BRUSH THAT CAN BECOME LADDER FUELS AND REMOVE ACCUMULATIONS OF LEAF LITTER FROM THE ROAD.
6. **WOODLAND / SAVANNAH / GRASSLAND ZONE** - FOR A WIDTH OF 150 FEET FROM THE STRUCTURE. REMOVE LOW HANGING TREE BRANCHES SMALLER THAN 3 INCHES IN DIAMETER UP TO A MINIMUM OF 8 FEET. AN INITIAL TREATMENT SHALL REQUIRE PRUNING OF SMALLER BRANCHES LESS THAN 3 INCHES IN DIAMETER TO KEEP THE TREE CANOPY 8 FEET ABOVE THE GROUND, AND A DENSITY REDUCTION OF UNDERSTORY SHRUBS. TREATMENT OF UNDERSTORY SHRUBS IS TO BE MAINTAINED ANNUALLY TO A MAXIMUM HEIGHT OF 2.5 FEET. WHEN THINNING, DO NOT CLEAR CUT BUT SELECTIVELY REMOVE MORE FLAMMABLE SPECIES (SUCH AS COYOTE BUSH) AND PRUNE MORE DESIRABLE SPECIES (SUCH AS CURRANT AND WILD ROSE). LEAF LITTER SHOULD BE KEPT TO A MAXIMUM DEPTH OF NO MORE THAN FOUR INCHES. HERBACEOUS GROUND COVER LAYER AND GRASSLAND SHOULD BE MOWED AND MAINTAINED ANNUALLY IN EARLY SUMMER TO A MINIMUM OF FOUR INCHES WITHIN 150 FEET OF STRUCTURES. ALL GRASSLAND WITHIN 150 FEET FROM STRUCTURES, THROUGHOUT ALL FUEL MANAGEMENT ZONES. ANNUAL GRASSLAND AREAS MUST BE MOWED AT LEAST ONCE ANNUALLY IN LATE SPRING OR EARLY SUMMER TO A MINIMUM HEIGHT OF 4 INCHES, IDEALLY AFTER NATIVE SPECIES HAVE SET SEED, AND NOT MORE FREQUENTLY THAN EVERY 60 DAYS. WOODY WEED SPECIES SUCH AS FRENCH BROOM, POISON HEMLOCK, AND THISTLES SHOULD BE COMPLETELY REMOVED ANNUALLY. THROUGHOUT ALL FUEL MANAGEMENT ZONES, REMOVE ALL DEAD BRANCHES ON THE GROUND SMALLER THAN 6 INCHES OF DIAMETER. RETAIN WOODY MATERIAL LARGER THAN 8 INCHES OF DIAMETER FOR WILDLIFE HABITAT IF NOT UNDER TREE CANOPY AND NOT WITHIN 150 FEET OF STRUCTURES.
7. **PRESCRIPTIONS FOR TREE PRUNING** - MAINTAIN VERTICAL CLEARANCE UNDER TREE CANOPY OF 8' FROM THE GROUND OR ⅓ THE HEIGHT OF THE TREE. WITHIN THIS VERTICAL CLEARANCE, REMOVE ALL DEAD BRANCHES AND LIMBS AND REMOVE ALL BRANCHES DEAD OR LIVING UNDER 3 INCHES IN DIAMETER. IN LANDSCAPED AREAS REMOVE ALL SPLIT AND DISEASED BRANCHES LARGER THAN 8 INCHES IN DIAMETER. OAKS WITH LIVE LIMBS RESTING ON THE GROUND NEED NOT BE REMOVED, BUT ALL GROUND DEBRIS BENEATH AND AROUND THE LIMBS SHOULD BE REMOVED. DO NOT THIN OR PRUNE THE TREE CANOPY ABOVE THE VERTICAL CLEARANCE ZONE OF 8' FROM GROUND OR ⅓ HEIGHT OF THE TREE, AS THIS WILL INCREASE UNDERSTORY GROWTH AND FIRE RISK. AFTER INITIAL PRUNING, TREE PRUNING SHOULD BE NEEDED INFREQUENTLY, EVERY 3-5 YEARS. IF NECESSARY TO REMOVE YOUNG TREES, THE REMOVAL OF ALL SEEDLINGS AND SAPLINGS OF BLACK OAK, VALLEY OAK, OR BLUE OAK IN THE OPENLANDS REQUIRES PRIOR APPROVAL FROM TEHAMA.

20' 0 20 40'

1" = 20'

NOT FOR CONSTRUCTION

ONLY THE ORIGINAL, SIGNED HARD COPY OF THIS DRAWING CONSTITUTES WILD LAND WORKSHOP'S PROFESSIONAL WORK PRODUCT. ELECTRONIC COPIES DO NOT. WILD LAND WORKSHOP WILL NOT BE RESPONSIBLE FOR ANY MODIFICATIONS MADE TO THIS DRAWING ELECTRONICALLY OR OTHERWISE THAT ARE NOT MADE BY WILD LAND WORKSHOP.

IF THE CONTRACTOR ENCOUNTERS ERRORS OR DISCREPANCIES ON THE DRAWINGS, OR SITE CONDITIONS WHICH PREVENT OR DELAY THE COMPLETION OF WORK AS INDICATED, THE CONTRACTOR SHALL NOTIFY THE OWNER AND LANDSCAPE ARCHITECT BY THE TIME OF BID OF ALL SUCH ERRORS, DISCREPANCIES, OR SITE CONDITIONS. FAILURE TO NOTIFY THE OWNER AND LANDSCAPE ARCHITECT BY THE TIME OF BID SHALL BE INTERPRETED AS ACCEPTANCE OF THE DRAWINGS AS WRITTEN AND SITE CONDITIONS AS FOUND.

WILD LAND
WORKSHOP
LANDSCAPE ARCHITECTURE
MONTEREY CA (831)238-8459

CALIFORNIA LICENSED LANDSCAPE ARCHITECT
MARIE S GOULET
6335
Renewal
06/30/2026
01/31/2025
Date
STATE OF CALIFORNIA

seal

ARCHITECT
SIGNUM ARCHITECTURE, LLP
1050 ADAMS STREET, SUITE D
ST. HELENA, CA 94574
707.963.8831

CIVIL ENGINEER
L&S ENGINEERING AND SURVEYING
2460 GARDEN ROAD, SUITE G
MONTEREY, CA 93940
831.655.2723

team

LISA AND BRAD SERWIN

owner

HILLTOP RESIDENCE

24 TEHAMA,
CARMEL, CA 93923

project

no.	description	date:
3	PERMIT SET	01.31.2025
2	COORDINATION SET	12.04.2024
1	STEP 3 REVISION	08.23.2024

date: 01.22.2025

FUEL MANAGEMENT PLAN

sheet title

L0.03

sheet no.

-- of

2/4/2025 10:01 AM

"I, MARIE GOULET, CERTIFY THAT THIS LANDSCAPING AND IRRIGATION PLAN COMPLIES WITH ALL MONTEREY COUNTY LANDSCAPING REQUIREMENTS INCLUDING USE OF NATIVE DROUGHT TOLERANT, NON-INVASIVE SPECIES, LIMITED TURF AND LOW FLOW, WATER CONSERVING IRRIGATION FIXTURES."

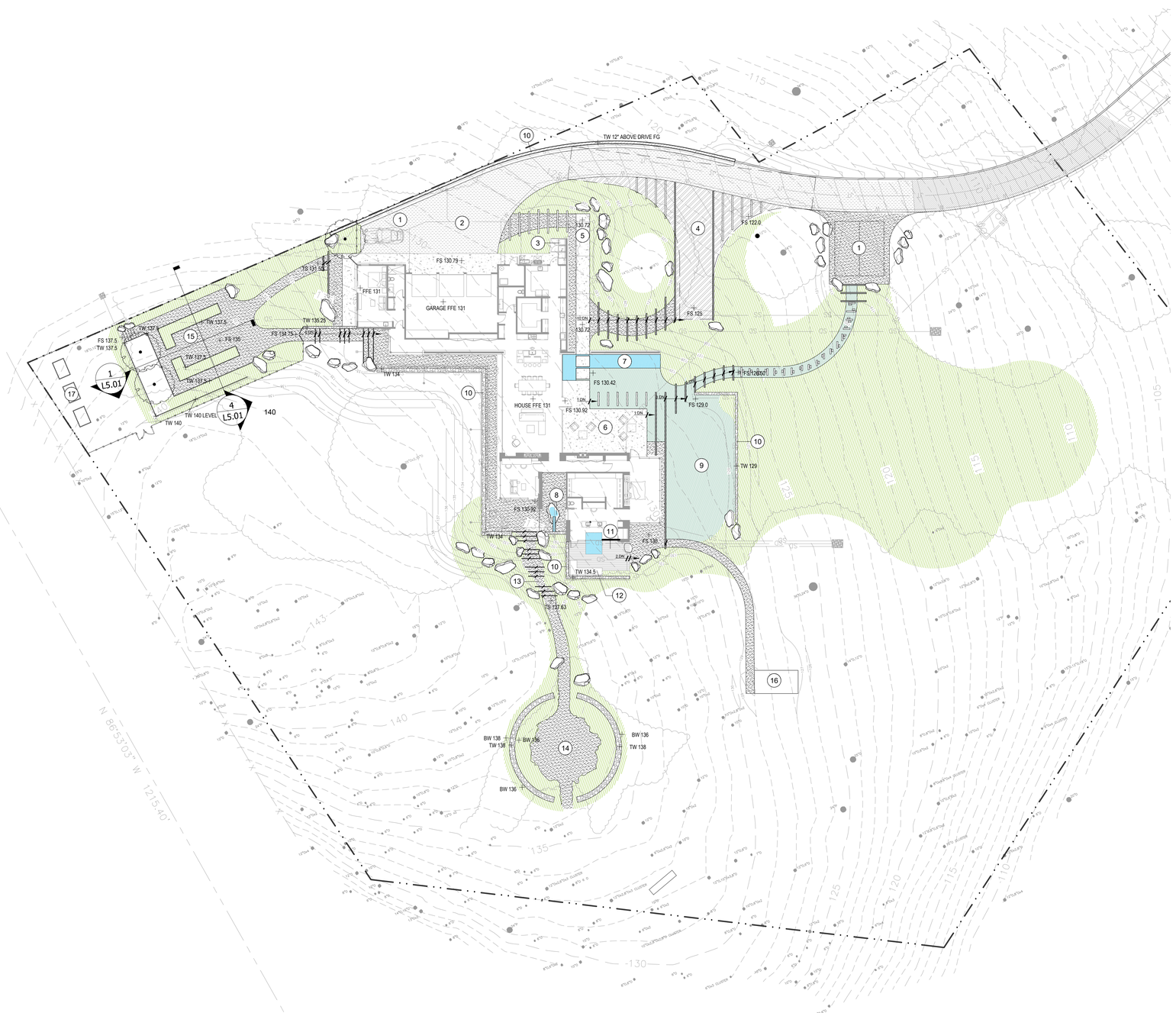

LANDSCAPE LEGEND

- PROPOSED TREES, SEE PLANTING PLAN
- PROPOSED LANDSCAPE BOULDERS, HOLLISTER GRANITE OR EQUAL, PLACE IN FIELD WITH LANDSCAPE ARCHITECT (1 / L5.00)
- DRY STACK STONE WALL (3 / L5.00)
- CONCRETE RETAINING WALL (9 / L5.00)
- STEEL STAIR TREADS: 10', 8' AND 6' LENGTHS (5 / L5.00)
- STAIR TREADS: MONOLITHIC SONOMA BUFF STONE STEPS (8 / L5.00)
- CUSTOM CUT STONE PAVERS: SONOMA BUFF (8 / L5.00)
- CONCRETE PAVING: INTEGRAL COLOR CARAMEL (6 / L5.00)
- GRAVEL PAVING WITH STEEL EDGING, ½" GOLDEN GRANITE GRAVEL AVAILABLE FROM TRI-COUNTY LANDSCAPE SUPPLY (2 / L5.00)
- STABILIZED DECOMPOSED GRANITE PAVING (4 / L5.00)
- GEOGRID WITH GRAVEL @ FIRE TRUCK TURN AROUND (7 / L5.00)
- NEW ASPHALT PAVING
- PROPOSED PLANTING AREAS, SEE PLANTING PLAN
- PROPOSED NO-MOW LAWN, SEE PLANTING PLAN
- WATER FEATURE (3 / L5.01) (5 / L5.01)

REFERENCE NOTES:

1. GUEST PARKING
2. DRIVEWAY
3. TRASH ENCLOSURE WITH 6' FENCE: SEE ARCH. DWGS
4. FIRE TRUCK TURNAROUND
5. ENTRY PATH
6. PATIO
7. REFLECTION POOL
8. FOUNTAIN
9. NO-MOW LAWN
10. RETAINING WALLS
11. CLASS A FIRE RATED DECKING
12. STONE BENCH
13. STEPS TO CLEARING
14. CIRCLE GATHERING
15. KITCHEN GARDEN
16. RELOCATED YOGA STUDIO
17. COMPOST AREA

20' 0 20 40'

1" = 20'

NOT FOR CONSTRUCTION

ONLY THE ORIGINAL, SIGNED HARD COPY OF THIS DRAWING CONSTITUTES WILD LAND WORKSHOP'S PROFESSIONAL WORK PRODUCT. ELECTRONIC COPIES DO NOT. WILD LAND WORKSHOP WILL NOT BE RESPONSIBLE FOR ANY MODIFICATIONS MADE TO THIS DRAWING ELECTRONIC OR OTHERWISE THAT IS NOT SIGNED BY WILD LAND WORKSHOP IF THE CONTRACTOR ENCOUNTERS ERRORS OR DISCREPANCIES ON THE DRAWINGS, OR SITE CONDITIONS WHICH PREVENT OR DELAY THE COMPLETION OF WORK AS INDICATED, THE CONTRACTOR SHALL NOTIFY THE OWNER AND LANDSCAPE ARCHITECT BY THE TIME OF BID OF ALL SUCH ERRORS, DISCREPANCIES AND OMISSIONS. THE CONTRACTOR SHALL INDEMNIFY AND HOLD THE LANDSCAPE ARCHITECT AND THE OWNER HARMLESS IF AFTER CONTRACTING FOR THE WORK HE HAS MONETARY DAMAGE BECAUSE OF SITE CONDITIONS, ERRORS, DISCREPANCIES OR OMISSIONS AT THE TIME OF BID.

WILD LAND WORKSHOP
LANDSCAPE ARCHITECTURE
MONTEREY CA (831)238-8459

LICENSED LANDSCAPE ARCHITECT
MARIE S GOULET
6335
06/30/2026
Renewal Date
01/31/2025
Date
STATE OF CALIFORNIA

seal

ARCHITECT
SIGNUM ARCHITECTURE, LLP
1050 ADAMS STREET, SUITE D
ST. HELENA, CA 94574
707.963.8831

CIVIL ENGINEER
L&S ENGINEERING AND SURVEYING
2460 GARDEN ROAD, SUITE G
MONTEREY, CA 93940
831.655.2723

team

LISA AND BRAD SERWIN

owner

HILLTOP RESIDENCE

24 TEHAMA,
CARMEL, CA 93923

project

no.	description	date
3	PERMIT SET	01.31.2025
2	COORDINATION SET	12.04.2024
1	STEP 3 REVISION	08.23.2024

date: 01.22.2025

LANDSCAPE SITE PLAN

sheet title

L1.00

sheet no.

-- of

2/4/2025 10:03 AM

"I, MARIE GOULET, CERTIFY THAT THIS LANDSCAPING AND IRRIGATION PLAN COMPLIES WITH ALL MONTEREY COUNTY LANDSCAPING REQUIREMENTS INCLUDING USE OF NATIVE DROUGHT TOLERANT, NON-INVASIVE SPECIES, LIMITED TURF AND LOW FLOW, WATER CONSERVING IRRIGATION FIXTURES."



PLANTING LEGEND

TREES

FRUIT TREE, SPECIES TBD

SHRUB LEGEND

KEY	BOTANICALNAME	COMMONNAME	SIZE	SPACING	WUCOLS
AO	ACHILLEA MILLEFOLIUM 'SONOMA COAST'	SONOMA WHITE YARROW	1 GAL	2' OC	L
A	AGASTACHE 'APACHE SUNSET'	GIANT HYSSOP	1 GAL	1'-6" OC	L
AL	ARCTOSTAPHYLOS BAKERI 'LOUIS EDMUNDS'	LOUIS EDMUNDS MANZINITA	1 GAL	4' OC	L
CP	CAREX PANSA	DUNE SEDGE	1 GAL	1'-6" OC	L
C	CLINOPODIUM DOUGLASII	YERBA BUENA	1 GAL	1'-0"	L
CC	CYNARA CARDUNCULUS	CARDOON	1 GAL	5' OC	
DC	DESCHAMPSIA CESPITOSA	TUFTED HAIR GRASS	1 GAL	1'-6" OC	L
HM	HEUCHERA MAXIMA	ISLAND ALUM ROOT	1 GAL	3' OC	M
I	IRIS DOUGLASIANA 'CANYON SNOW'	CANYON SNOW DOUGLAS IRIS	1 GAL	2' OC	L
L	LAVANDULA INTERMEDIA 'GROSSO'	LAVENDER	1 OR 2 GAL	3' OC	L
MR	MUHLENBERGIA RIGENS	DEER GRASS	5 GAL	2'-6" OC	L
N	NEPETA FAASSENII 'WHITE CLOUD'	CAT MINT	4" POT	2'-0"	VL
O	ORIGANUM VULGARE	CULINARY OREGANO	1 GAL	2' OC	M
PM	POLYSTICHUM MUNITUM	SWORD FERN	5 GAL	3' OC	M
R	ROSMARINUS OFFICINALIS 'BOULE'	BOULE ROSEMARY	5 GAL	2' OC	L
S	SALVIA OFFICINALIS	COMMON SAGE	1 GAL	2' OC	L
SA	SESLERIA AUTUMNALIS	AUTUMN MOOR GRASS	1 GAL	2' OC	M
S	STACHYS BYZANTINA	LAMB'S EARS	1 GAL	2' OC	L
T	THYMUS VULGARIS	COMMON THYME	4" POT	2' OC	L

MEADOW EDGE LEGEND

KEY	BOTANICALNAME	COMMONNAME	SIZE	SPACING	WUCOLS
DC	DESCHAMPSIA CESPITOSA	TUFTED HAIR GRASS	1 GAL	1'-6" OC	L
EA	ESCHSCHOLZIA CALIFORNICA 'ALBA'	'ALBA' CALIFORNIA POPPY	1 GAL	1'-6" OC	VL
MR	MUHLENBERGIA RIGENS	DEER GRASS	5 GAL	2'-6" OC	L
P	PHACELIA CALIFORNICA	SCORPION FLOWER	1 GAL	1' OC	L
SA	SESLERIA AUTUMNALIS	AUTUMN MOOR GRASS	1 GAL	2' OC	M
SV	SOLIDAGO VELUTINA SSP CALIFORNICA	CALIFORNIA GOLDENROD	1 GAL	1'-6" OC	M
V	VERBENA LASIOSTACHYS	WESTERN VERVAIN	1 GAL	2' OC	VL

GROUNDCOVERS

KEY	BOTANICALNAME	COMMONNAME	SIZE	SPACING	WUCOLS
	UC VERDE BUFFALO GRASS	UC VERDE	PLUGS	1' OC	L

MEADOW MIX (TEMP. IRRIGATION)

BOTANICAL NAME	COMMON NAME	SIZE
ASCLEPIA CALIFORNICA	CALIFORNIA MILKWEED	PLUG
CAREX PANSA	SAND DUNE SEDGE	PLUG
COLLINSIA HETEROPHYLLA	PURPLE CHINESE HOUSES	SEED
ESCHSCHOLZIA CALIFORNICA	CALIFORNIA POPPY	SEED
LUPINUS NANUS	SKY LUPINE	SEED
JUNCUS PATENS	COMMON RUSH	SEED
MUHLENBERGIA RIGENS	DEERGRASS	PLUG
PHACELIA CALIFORNICA	ROCK PHACELIA	SEED
SOLIDAGO CALIFORNICA	CALIFORNIA GOLDENROD	SEED
STIPA PULCHRA	PURPLE NEEDLE GRASS	SEED & PLUG

WOODLAND EDGE PLUG MIX (TEMP. IRRIGATION)

BOTANICAL NAME	COMMON NAME
CAREX PRAEGRACILIS	CLUSTERED FIELD SEDGE
FESTUCA CALIFORNICA	CALIFORNIA FESCUE
IRIS DOUGLASIANA 'CANYON SNOW'	'CANYON SNOW' DOUGLAS IRIS

EDIBLE PLANTS BY OWNER MIX:

BOTANICAL NAME	COMMON NAME
ALLIUM SSP.	ONION / GARLIC
ALYOSIA CITROYDA	LEMON VERBENA
ASPARAGUS OFFICIANALIS	ASPARAGUS
CALENDULA OFFICINALIS	CALENDULA
HYSSOP OFFICINALIS	HYSSOP
LEONURUS CARDIACA	MOTHERWORT
MATRICARIA RECUTITA	GERMAN CHAMOMILE
MELISSA OFFICINALIS	LEMON BALM
TANACETUM PARTHENIUM	FEVERFEW

WOODLAND GROUND COVER (TEMP IRRIGATION)

AGROSTIS PALLENS SEED, APPLY 1 OZ / 1000 SQ FT

PLANTING NOTES:

PLANTING DESIGN AND FUEL MANAGEMENT DESCRIPTION:
THE INTENT OF THIS DESIGN IS TO BLEND THE ARCHITECTURE INTO THE SURROUNDING LANDSCAPE WITH NATIVE, SITE SPECIFIC GRASSLAND AND OAK WOODLAND SPECIES APPROPRIATE FOR THE AREA. THE PLANTING AREAS ADJACENT TO THE BUILDINGS ARE INTENDED TO BE MOWED IN EARLY SUMMER FOR FUEL MANAGEMENT AND WEED MANAGEMENT. THOSE CLOSEST TO THE BUILDINGS ARE SELECTED BASED ON THEIR FLAME RESISTANCE AS WELL AS AESTHETICS.

SOIL AMENDMENT

1. ALL SHRUB PLANTING AREAS TO RECEIVE 3" DEEP MULCH, VERIFY SPEC WITH LANDSCAPE ARCHITECT.
2. AMEND SOIL BASED ON SITE SPECIFIC SOIL TESTING RECOMMENDATIONS, CONTRACTOR TO SEND SOIL SAMPLES OUT FOR TESTING AND PROVIDE RESULTS TO OWNER AND LANDSCAPE ARCHITECT.

20' 0 20 40'

1" = 20'

NOT FOR CONSTRUCTION

ONLY THE ORIGINAL, SIGNED HARD COPY OF THIS DRAWING CONSTITUTES WILD LAND WORKSHOP'S PROFESSIONAL WORK PRODUCT. ELECTRONIC COPIES DO NOT. WILD LAND WORKSHOP AND NOT BE RESPONSIBLE FOR ANY MODIFICATIONS MADE TO THIS DRAWING ELECTRONICALLY OTHERWISE. DWG CAD FILES ARE NOT WILD LAND WORKSHOP'S WORK PRODUCT. IF THE CONTRACTOR ENCOUNTERS ERRORS OR DISCREPANCIES ON THE DRAWINGS, OR SITE CONDITIONS WHICH PREVENT OR STOP THE COMPLETION OF WORK AS INDICATED, THE CONTRACTOR SHALL NOTIFY THE OWNER AND LANDSCAPE ARCHITECT BY THE TIME OF BID OF ALL SUCH ERRORS, DISCREPANCIES AND CONDITIONS. IF CONTRACTOR PROCEEDS WITH WORK IN KNOWN ERROR, DISCREPANCY OR UNFAVORABLE CONDITIONS, HE DOES SO AT HIS OWN RISK AND EXPENSE.

2/4/2025 10:03 AM

WILD LAND WORKSHOP
LANDSCAPE ARCHITECTURE
MONTEREY CA (831)238-8459

seal

ARCHITECT
SIGNUM ARCHITECTURE, LLP
1050 ADAMS STREET, SUITE D
ST. HELENA, CA 94574
707.963.8831

CIVIL ENGINEER
L&S ENGINEERING AND SURVEYING
2460 GARDEN ROAD, SUITE G
MONTEREY, CA 93940
831.655.2723

team

LISA AND BRAD SERWIN

owner

HILLTOP RESIDENCE

24 TEHAMA,
CARMEL, CA 93923

project

no.	description	date
3	PERMIT SET	01.31.2025
2	COORDINATION SET	12.04.2024
1	STEP 3 REVISION	08.23.2024

date: 01.22.2025

PLANTING PLAN

sheet title

L2.00

sheet no.

-- of

"I, MARIE GOULET, CERTIFY THAT THIS LANDSCAPING AND IRRIGATION PLAN COMPLIES WITH ALL MONTEREY COUNTY LANDSCAPING REQUIREMENTS INCLUDING USE OF NATIVE DROUGHT TOLERANT, NON-INVASIVE SPECIES, LIMITED TURF AND LOW FLOW, WATER CONSERVING IRRIGATION FIXTURES."

PROJECT IRRIGATION NOTES:

1. LANDSCAPE CONTRACTOR WILL FOLLOW INDUSTRY STANDARDS FOR THE INSTALLATION OF THE IRRIGATION SYSTEM. ANY PROPOSED CHANGES TO THE IRRIGATION SYSTEM WILL BE SUBMITTED TO THE LANDSCAPE ARCHITECT FOR REVIEW PRIOR TO THE CHANGES BEING MADE. CONTRACTOR TO VERIFY IN FIELD THE CONDITIONS OF THE LANDSCAPE AREAS PRIOR TO INSTALLATION OF THE IRRIGATION SYSTEM .

2. MAINLINE PIPE SHALL BE NO LESS THAN CLASS 315 FOR PIPE SIZED 3" AND GREATER, AND SCHEDULE 40 FOR PIPE SIZED 2-1/2" AND SMALLER. MAINLINE PIPING SHALL BE INSTALLED AT A MINIMUM DEPTH TO ENSURE 18" OF COVER AND SHALL BE INSTALLED IN SUCH A MANNER AS TO NOT INTERFER WITH THE STORMWATER AND OTHER UTILITIES' SYSTEMS.

3. LATERAL PIPING SHALL BE CLASS 200 PIPE AND INSTALLED TO A MINIMUM DEPTH TO ENSURE 12" OF COVER.

4. THIS DESIGN IS DIAGRAMMATIC. ALL PIPING, VALVES, ETC. SHOWN WITHIN PAVED AREAS IS FOR DESIGN CLARIFICATION ONLY AND SHALL BE INSTALLED IN PLANTING AREAS WHERE POSSIBLE. AVOID ANY CONFLICTS BETWEEN THE SPRINKLER SYSTEM, PLANTING, TREE ROOT ZONES AND ARCHITECTURAL FEATURES.

5. SYSTEM SHALL RECEIVE AN INTERIOR MOUNTED IRRIGATION CONTROLLER. CONTRACTOR TO VERIFY IN FIELD LOCATION PRIOR TO INSTALLATION. ELECTRICAL CONNECTION BY OTHERS.

6. LANDSCAPE IRRIGATION SYSTEMS SHALL BE INSTALLED TO PREVENT OVER-SPRAY ON STRUCTURES.

7. IRRIGATION DEMAND: 20 GPM AT 80 PSI. FIELD VERIFY EXACT PRESSURE PRIOR TO START OF WORK. IF PRESSURE VARIES FROM REQUIRED PRESSURE, NOTIFY LANDSCAPE ARCHITECT FOR FURTHER INSTRUCTION.

8. ALL SPRAY VALVES AND SPRINKLER OUTLETS SHOWN ARE FOR THE ESTABLISHMENT PERIOD AND SHALL BE RARELY USED POST ESTABLISHMENT.

9. REFER TO PLANTING PLAN FOR FULL EXTENT OF SEEDED AREAS. CONTRACTOR TO ADD ALTERNATE ALLOWANCE FOR OVER-HEAD SPRAYS AT ALL DISTURBED AREAS THAT SHALL RECEIVE SEED MIX. SPRAYS SHALL BE MATCH PRECIPITATION ROTATOR NOZZLES AND THE PVC LATERAL LINES SHALL BE PLACED ON THE SURFACE WITH NO TRENCHING REQUIRED.

10. ALL IRRIGATION OUTLETS AND PIPING FOR TEMPORARY ZONES SHALL BE INSTALLED ABOVE GROUND AND REMOVED AFTER THE ESTABLISHMENT PERIOD OF NO MORE THAN THREE (3) YEARS FROM DATE OF PLANTING.

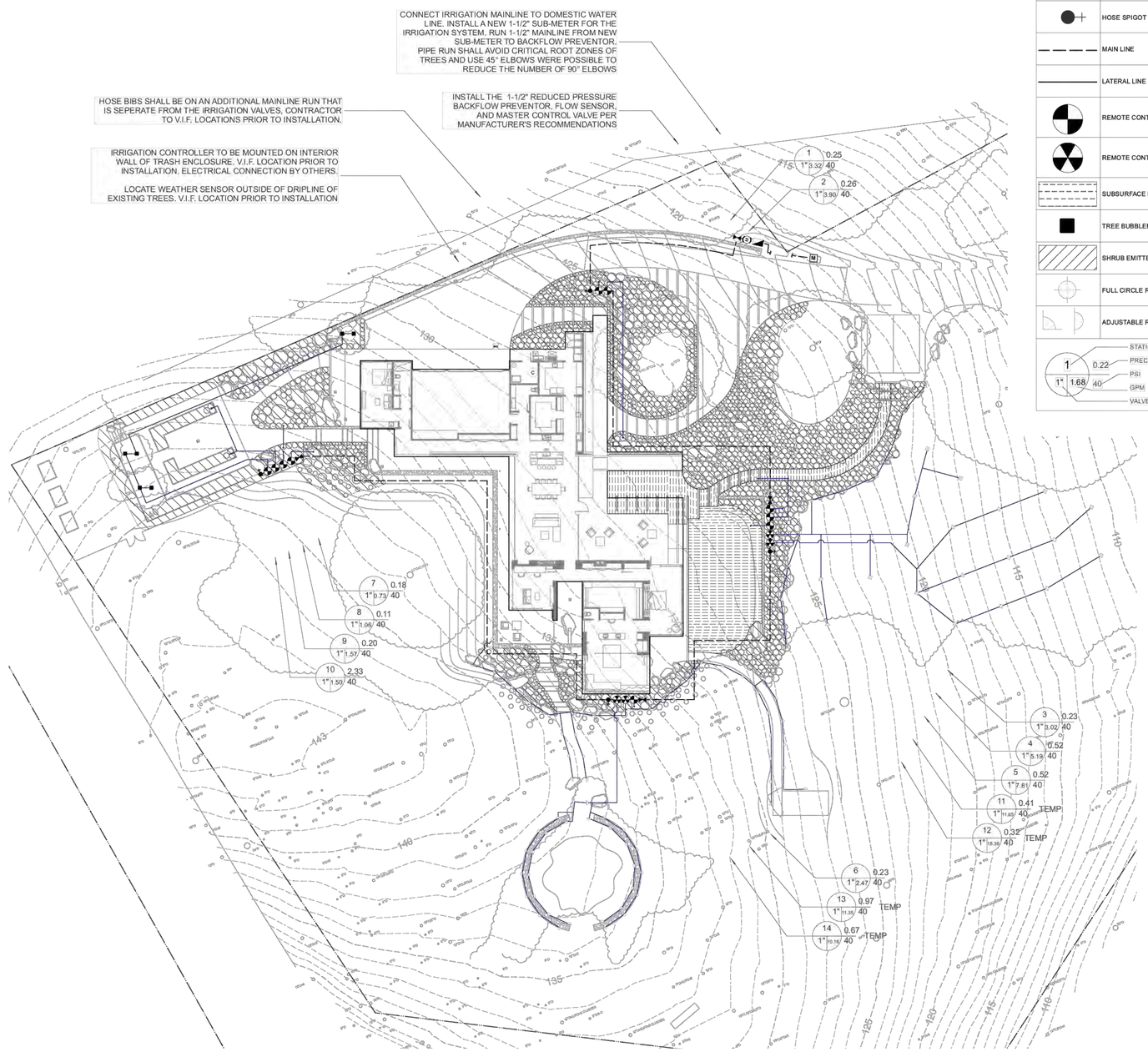

IRRIGATION LEGEND

SYMBOL	DESCRIPTION	MANUFACTURER	PRODUCT	MODEL NUMBER	NOTES
M	POINT OF CONNECTION	ASSURED AUTOMATION	1-1/2" SUB-METER	WM150	PER MANUFACTURER'S RECOMMENDATIONS
	BACKFLOW PREVENTOR	FEBCO	1-1/2" BACKFLOW PREVENTOR W/ PRESSURE REGULATOR, IN ENCLOSURE	825Y	PER MANUFACTURER'S RECOMMENDATIONS, SEE DETAIL 1/L3.02
C	CONTROLLER	HUNTER	PRO-HC W/ RAIN CLIK AND HC-150-FLOW SENSOR	PHC-1200	12 STATION HYDRAWISE COMPATIBLE CONTROLLER, SEE DETAIL 9/L3.02
WS	WEATHER SENSOR	HUNTER	SOLAR-SYNC ETO-RAIN-FREEZE SENSOR	WSS-SEN	WIRELESS SENSOR, LOCATE NO MORE THAN 800' FROM CONTROLLER
F	FLOW SENSOR	HUNTER	1-1/2" FLOW-SYNC SENSOR	HC-150-FLOW	PER MANUFACTURER'S RECOMMENDATIONS, SEE DETAIL 2/L3.02
M	MASTER VALVE	HUNTER	1-1/2" REMOTE CONTROL VALVE WITH FILTER SCREEN, NORMALLY CLOSED	ICV-151G-FS	PER MANUFACTURER'S RECOMMENDATIONS, SEE DETAIL 3/L3.02
	BRASS SHUT-OFF VALVE	NIBCO	LINE-SIZE BRASS GATE VALVE	TI-8	PER MANUFACTURER'S RECOMMENDATIONS, SEE DETAIL 5/L3.02
	HOSE SPIGOT	LASCO	3/4" INVERTED GARDEN VALVE	MODEL 06-1342	PER MANUFACTURER'S RECOMMENDATIONS, SEE DETAIL 4/L3.02
	MAIN LINE	-	PVC SCH 40 W/ SOLVENT WELD FITTINGS	-	SIZE: 1-1/2", SEE DETAIL 8/L3.02
	LATERAL LINE	-	PVC CLASS 200 W/SOLVENT WELD FITTINGS	-	SIZE: 0 - 6 GPM = 3/4", 7 - 18 GPM = 1", SEE DETAIL 8/L3.02
	REMOTE CONTROL VALVE	HUNTER	DRIP ZONE CONTROL KITS	PCZ-101-LF-40	USE DRIP ZONE KITS AT ALL SUBSURFACE DRIP, BUBBLERS, AND EMITTERS. SEE DETAIL 6/L3.02
	REMOTE CONTROL VALVE	HUNTER	GLOBE VALVES	ICV-101G	ICV TO BE USED AT POP-UP SPRAYS, SEE DETAIL 7/L3.02
	SUBSURFACE DRIP ZONE	HUNTER	0.4 GPM DRIP LINE W/ CHECK VALVES	HDL-04-18-CV	12" ROW AND 12" EMITTER SPACING UNLESS OTHERWISE NOTED, SEE DETAILS 1-4/L3.03
	TREE BUBBLERS	HUNTER	18" ROOT ZONE WATERING SYSTEM	RZWS-18-25-CV	0.25 GPM BUBBLER, SEE DETAIL 5/L3.02
	SHRUB EMITTERS	HUNTER	0.50 GPH EMITTERS W/BARBED END	HE-050-B	PLACE TWO (2) PER 15 GAL. SHRUBS, SEE DETAIL 7/L3.03
	FULL CIRCLE ROTATOR	HUNTER	MP ROTATOR NOZZLE ON 12" POP-UP	MP1000-360 OR MP2000-360	PER MANUFACTURER'S RECOMMENDATIONS, SEE DETAIL 6/L3.03
	ADJUSTABLE ROTATOR	HUNTER	MP ROTATOR NOZZLE ON 12" PO-UP	MP1000-90 OR MP2000-90	V.I.F. USE MP-800 SERIES WHERE NECESSARY, SEE DETAIL 6/L3.03

1 — STATION NUMBER
1" 1.68 40 — 1" = PRECIPITATION RATE; 1.68 = PSI; 40 = GPM
0.22 — VALVE SIZE

24 Tehema, Carmel CA 93923

Regular Landscape Area	7,447	SF
Special Landscape Area	1,739	SF
Total Landscape Area	9186	SF
Eto (CIMIS)	49.7	
Eppt (@ 25% Annual Rainfall)	5.275	

Maximum Applied Water Allowance

(Eto - Eppt)	X	Gal./SF	X	[(0.55 x LA)	+	(0.45 x SLA)]	MAWA	ACRE-FT.
44.43		0.62		5,052		782.55	**160,712**	**0.49**

Estimated Total Water Use (Post Establishment)

Plant Water Use	(ETo)(0.62)	X	(PF x HA) IE		ETWU	ACRE-FT.
Low	30.8		2,268		69,891	
Med.	30.8		0		0	
High	30.8		0		0	
				ETWU	**69,891**	**0.21**

ETWU complies with MAWA

Estimated Total Water Use (Establishment Period @ 9,857 SF Grassland Restoration Areas)

Plant Water Use	(ETo)(0.62)	X	(PF x HA) IE		ETWU	ACRE-FT.
Low	30.8		2,629		80,996	
Med.	30.8		0		0	
High	30.8		0		0	
				ETWU	**80,996**	**0.25**
				Total Establishment ETWU	**150,886**	**0.46**

2/4/2025 10:02 AM

NOT FOR CONSTRUCTION

ANY CONTRACTOR SHALL NOTIFY THE OWNER AND LANDSCAPE ARCHITECT BY THE TIME OF BID OF ALL SUCH ERRORS, IF THE CONTRACTOR ENCOUNTERS ERRORS OR DISCREPANCIES ON THE DRAWINGS, OR SITE CONDITIONS WHICH PREVENT OR DELAY THE COMPLETION OF WORK AS INDICATED, THE CONTRACTOR SHALL NOTIFY THE OWNER AND LANDSCAPE ARCHITECT BY THE TIME OF BID OF ALL SUCH ERRORS, DISCREPANCIES AND CONDITIONS. THE OWNER SHALL CONFIRM IN WRITING HOW THE WORK IS TO PROCEED. FAILURE TO NOTIFY THE OWNER AND LANDSCAPE ARCHITECT OF ERRORS, DISCREPANCIES AND CONDITIONS WHICH PREVENT OR DELAY THE COMPLETION OF WORK AS INDICATED, THE CONTRACTOR ASSUMES FULL RESPONSIBILITY FOR ANY AND ALL RESULTING LOSSES.

COPYRIGHT © 2025 WILD LAND WORKSHOP

THESE DRAWINGS, AS AN INSTRUMENT OF SERVICE, ARE AND SHALL REMAIN THE PROPERTY OF WILD LAND WORKSHOP. THEY ARE NOT TO BE CHANGED OR COPIED IN ANY FORM OR MANNER WHATSOEVER, NOR ARE THEY TO BE ASSIGNED TO ANY THIRD PARTY, WITHOUT FIRST OBTAINING THE EXPRESS WRITTEN PERMISSION AND CONSENT OF WILD LAND WORKSHOP.

ANY UNAUTHORIZED USE OF THESE DRAWINGS WILL BE AT THE SOLE RISK OF THE UNAUTHORIZED USER AND WITHOUT LIABILITY TO WILD LAND WORKSHOP.

ONLY THE ORIGINAL SIGNED HARD COPY OF THIS DRAWING CONSTITUTES WILD LAND WORKSHOP'S PROFESSIONAL WORK PRODUCT. ELECTRONIC COPIES DO NOT. WILD LAND WORKSHOP WILL NOT BE RESPONSIBLE FOR ANY UNAUTHORIZED ALTERATIONS TO THE DRAWING CONTENT OR FORMAT THAT OCCUR DURING ELECTRONIC TRANSMISSION OR STORAGE.

WILD LAND WORKSHOP
LANDSCAPE ARCHITECTURE
MONTEREY CA (831)238-8459

LICENSED LANDSCAPE ARCHITECT — MARIE S GOULET — 6335 — 06/30/2026 — 01/31/2025 — STATE OF CALIFORNIA

seal

ARCHITECT
SIGNUM ARCHITECTURE, LLP
1050 ADAMS STREET, SUITE D
ST. HELENA, CA 94574
707.963.8831

CIVIL ENGINEER
L&S ENGINEERING AND SURVEYING
2460 GARDEN ROAD, SUITE G
MONTEREY, CA 93940
831.655.2723

team

LISA AND BRAD SERWIN

owner

HILLTOP RESIDENCE

24 TEHAMA,
CARMEL, CA 93923

project

no.	description	date
3	PERMIT SET	01.31.2025
2	COORDINATION SET	12.04.2024
1	STEP 3 REVISION	08.23.2024

date: 01.22.2025

IRRIGATION DIAGRAM

sheet title

L3.00

sheet no.

of

"I, MARIE GOULET, CERTIFY THAT THIS LANDSCAPING AND IRRIGATION PLAN COMPLIES WITH ALL MONTEREY COUNTY LANDSCAPING REQUIREMENTS INCLUDING USE OF NATIVE DROUGHT TOLERANT, NON-INVASIVE SPECIES, LIMITED TURF AND LOW FLOW, WATER CONSERVING IRRIGATION FIXTURES."

GENERAL IRRIGATION NOTES

1. THE CONTRACTOR SHALL REVIEW RELATED DRAWINGS AND SHALL ENSURE COORDINATION WITH ALL APPLICABLE TRADES PRIOR TO SUBMITTING BID.

2. THE IRRIGATION SYSTEM SHALL BE INSTALLED IN CONFORMANCE WITH ALL APPLICABLE STATE AND LOCAL CODES AND ORDINANCES BY LICENSED CONTRACTORS AND EXPERIENCED WORKERS. CONTRACTOR SHALL OBTAIN AND PAY FOR ALL REQUIRED PERMITS AND FEES RELATING TO THEIR WORK.

3. THIS DESIGN IS DIAGRAMMATIC. ALL PIPING, VALVES, ETC. SHOWN WITHIN PAVED AREAS IS FOR DESIGN CLARIFICATION ONLY AND SHALL BE INSTALLED IN PLANTING AREAS WHERE POSSIBLE. AVOID ANY CONFLICTS BETWEEN THE SPRINKLER SYSTEM, PLANTING, TREE ROOT ZONES AND ARCHITECTURAL FEATURES.

4. PARALLEL PIPES MAY BE INSTALLED IN COMMON TRENCH. PIPES ARE NOT TO BE INSTALLED DIRECTLY ABOVE ONE ANOTHER. TRENCHES SHALL BE AMPLE SIZE TO PERMIT THE PIPES TO BE LAID AT THE ELEVATIONS INTENDED AND TO PERMIT SPACE FOR JOINING.

5. CONTRACTOR SHALL RESTORE SURFACES, EXISTING UNDERGROUND INSTALLATIONS, ETC., DAMAGED OR CUT AS A RESULT OF EXCAVATIONS, TO ORIGINAL CONDITIONS IN A MANNER APPROVED BY THE OWNER'S REPRESENTATIVE.

6. DO NOT WILLFULLY INSTALL THE SPRINKLER SYSTEM AS SHOWN ON THE DRAWINGS WHEN IT IS OBVIOUS IN THE FIELD THAT OBSTRUCTIONS, GRADE DIFFERENCES OR DIFFERENCES IN THE AREA DIMENSIONS EXIST THAT MIGHT NOT HAVE BEEN CONSIDERED IN THE ENGINEERING. SUCH OBSTRUCTIONS OR DIFFERENCES SHOULD BE BROUGHT TO THE ATTENTION OF THE OWNER'S AUTHORIZED REPRESENTATIVE. IN THE EVENT THAT THIS NOTIFICATION IS NOT PERFORMED, THE CONTRACTOR SHALL ASSUME FULL RESPONSIBILITY FOR ANY REVISIONS NECESSARY.

7. IT IS THE RESPONSIBILITY OF THE CONTRACTOR TO BECOME FAMILIAR WITH ALL GRADE DIFFERENCES, LOCATION OF WALLS, RETAINING WALLS, ETC. COORDINATE WORK WITH THE GENERAL CONTRACTOR AND OTHER SUBCONTRACTORS FOR THE LOCATION AND THE INSTALLATION OF PIPE SLEEVES THROUGH WALLS, UNDER ROADWAYS, PAVING, STRUCTURES, ETC. CONTRACTOR TO VERIFY THE LOCATION OF EXISTING UNDERGROUND UTILITIES AND STRUCTURES PRIOR TO THE EXCAVATION OF TRENCHES. CONTRACTOR IS TO REPAIR ANY DAMAGE CAUSED BY THEIR WORK AT NO ADDITIONAL COST TO THE OWNER.

8. DUE TO THE SCALE OF THE DRAWINGS, IT IS NOT POSSIBLE TO INDICATE ALL OFFSETS, FITTINGS, SLEEVES, ETC., WHICH MAY BE REQUIRED. CAREFULLY INVESTIGATE THE STRUCTURAL AND FINISHED CONDITIONS AFFECTING ALL WORK AND PLAN WORK ACCORDINGLY, FURNISHING SUCH FITTINGS, ETC., AS MAY BE REQUIRED TO MEET SUCH CONDITIONS. DRAWINGS ARE GENERALLY DIAGRAMMATIC AND INDICATIVE OF THE WORK TO BE INSTALLED. THE WORK SHALL BE INSTALLED IN SUCH A MANNER AS TO AVOID CONFLICTS BETWEEN IRRIGATION SYSTEMS, PLANTING, AND ARCHITECTURAL FEATURES.

9. ELECTRICAL CONTRACTOR TO SUPPLY 120 VAC (2.5 AMP) SERVICE TO CONTROLLER LOCATION. IRRIGATION CONTRACTOR TO MAKE FINAL CONNECTION FROM ELECTRICAL STUB-OUT TO CONTROLLER. IRRIGATION CONTROL WIRE SHALL BE #14, U.L. APPROVED FOR DIRECT BURIAL. COMMON WIRE SHALL BE #12 U.L. APPROVED AND SHALL BE WHITE IN COLOR. WIRING TO INDIVIDUAL REMOTE CONTROL VALVES SHALL BE COLOR OTHER THAN WHITE.

10. EACH CONTROLLER SHALL HAVE ITS OWN INDEPENDENT GROUND WIRE.

11. REMOTE CONTROL VALVES SHALL BE WIRED TO CONTROLLER IN SEQUENCE AS SHOWN ON PLANS. RUN WIRE FROM EACH RCV TO THE CONTROLLER. SPLICING WIRES TOGETHER OUTSIDE OF VALVE BOXES WILL NOT BE PERMITTED. ATTACH A LABEL TO CONTROL WIRE AT THE CONTROLLER AND ATTACH AN ID TAG AT EACH REMOTE CONTROL VALVE INDICATING CONTROLLER AND STATION NUMBER.

12. SPLICING OF 24-VOLT WIRES WILL NOT BE PERMITTED EXCEPT IN VALVE BOXES. LEAVE A 36" COIL OF EXCESS WIRE AT EACH SPLICE AND 100 FEET ON CENTER ALONG WIRE RUN. TAPE WIRE IN BUNDLES 10 FEET ON CENTER. NO TAPING PERMITTED INSIDE SLEEVES.

13. WIRE CONNECTORS SHALL BE 3M-DBR/Y-6 DIRECT BURY UNLESS OTHERWISE NOTED.

14. INSTALL TWO (2) SPARE CONTROL WIRES ALONG THE ENTIRE MAIN LINE. SPARE WIRES SHALL BE THE SAME COLOR (ONE WITH A WHITE STRIPE) AND OF A DIFFERENT COLOR THAN OTHER CONTROL WIRES. LOOP 36" EXCESS WIRE INTO EACH SINGLE VALVE BOX AND INTO ONE VALVE BOX IN EACH GROUP OF VALVES.

15. VALVE LOCATIONS SHOWN ARE DIAGRAMMATIC. INSTALL IN GROUND COVER/SHRUB AREAS WHERE POSSIBLE.

16. INSTALL VALVE BOXES MINIMUM 12" FROM AND PERPENDICULAR TO WALK, CURB, BUILDING OR LANDSCAPE FEATURE. AT MULTIPLE VALVE BOX GROUPS, EACH BOX SHALL BE AN EQUAL DISTANCE FROM THE WALK, CURB, ETC. AND EACH BOX SHALL BE MINIMUM 12" APART. SHORT SIDE OF VALVE BOXES SHALL BE PARALLEL TO WALK, CURB, ETC.

17. THOROUGHLY FLUSH MAIN LINE BEFORE INSTALLING VALVES.

18. ALL MAIN LINES SHALL BE FLUSHED PRIOR TO THE INSTALLATION OF IRRIGATION HEADS, BUBBLERS AND DRIP TUBING. AT 30 DAYS AFTER INSTALLATION EACH SYSTEM SHALL BE FLUSHED TO ELIMINATE GLUE AND DIRT PARTICLES FROM THE LINES.

19. LOCATE BUBBLERS ON UPHILL SIDE OF TREES. TREE BUBBLERS ARE FOR ESTABLISHMENT AND DROUGHT CONDITIONS. THEY ARE TO BE TURNED OFF AFTER TREES ARE ESTABLISHED AND TURNED ON DURING DROUGHT CONDITIONS.

20. IN ADDITION TO THE SLEEVES AND CONDUITS SHOWN ON THE DRAWINGS, THE IRRIGATION CONTRACTOR SHALL BE RESPONSIBLE FOR COORDINATING THE INSTALLATION OF SLEEVES AND CONDUITS OF SUFFICIENT SIZE UNDER ALL PAVED AREAS.

21. ALL EXCAVATIONS ARE TO BE FILLED WITH COMPACTED BACKFILL. BACKFILL MATERIAL SHALL BE THE EARTH EXCAVATED FROM THE TRENCH AND FREE OF ROCKS AND OTHER FOREIGN COURSE MATERIAL. COMPACT BACKFULL TO A MINIMUM OF 90 PERCENT OF ORIGINAL SOIL DENSITY. REPAIR ALL SETTLED TRENCHES PROMPTLY, FOR A PERIOD OF 1 YEAR AFTER COMPLETION OF WORK.

22. CONTRACTOR SHALL WARRANT THAT THE IRRIGATION SYSTEM WILL BE FREE FROM DEFECTS IN MATERIALS AND WORKMANSHIP FOR A PERIOD OF 1 YEAR AFTER FINAL ACCEPTANCE OF WORK.

23. ALL CONSTANT PRESSURE PIPES SHALL BE TESTED AT A MINIMUM OF 125 PSI FOR TWO HOURS. CENTER LOAD PIPING WITH A SMALL AMOUNT OF BACKFILL TO PREVENT ARCHING OR SLIPPING UNDER PRESSURE. NO FITTINGS SHALL BE COVERED. REPAIR FAULTY JOINTS WITH NEW MATERIALS. DO NOT USE CEMENT OR CAULKING TO REPAIR LEAKS.

24. WHERE IT IS NECESSARY TO EXCAVATE ADJACENT TO EXISTING TREES, USE ALL POSSIBLE CARE TO AVOID INJURY TO TREES, AND TREE ROOTS. EXCAVATION IN AREAS WHERE 2 INCH AND LARGER ROOTS OCCUR SHALL BE DONE BY HAND. ROOTS 2 INCHES AND LARGER IN DIAMETER SHALL BE WRAPPED IN A PLASTIC BAG AND SECURED WITH A RUBBER BAND. TRENCHES ADJACENT TO TREE SHOULD BE CLOSED WITHIN 24 HOURS; WHERE THIS IS NOT POSSIBLE, THE SIDE OF THE TRENCH ADJACENT TO THE TREE SHALL BE KEPT SHADED WITH BURLAP OR CANVAS.

25. THE SPRINKLER SYSTEM DESIGN IS BASED ON THE MINIMUM OPERATING PRESSURE SHOWN ON THE IRRIGATION DRAWINGS. VERIFY WATER PRESSURE PRIOR TO CONSTRUCTION. REPORT ANY DIFFERENCE BETWEEN THE WATER PRESSURE INDICATED ON THE DRAWINGS AND THE ACTUAL PRESSURE READING AT THE IRRIGATION POINT OF CONNECTION TO THE OWNER'S AUTHORIZED REPRESENTATIVE.

26. NOTIFY UNDERGROUND SERVICE ALERT AT 811 AT LEAST 48 HOURS PRIOR TO ANY EXCAVATION.

27. AT LEAST 10 DAYS PRIOR TO COMPLETION OF CONSTRUCTION, PROVIDE THE OWNER WITH A MAINTENANCE MANUAL. DATA SHALL BE ON 8 1/2" X 11" SHEETS, IN A 3-RING BINDER AND SHALL INCLUDE:
- INDEX SHEET WITH CONTRACTOR'S CONTACT INFORMATION AND LIST OF EQUIPMENT WITH LOCAL MANUFACTURER'S REPRESENTATIVES.
- CATALOG AND PARTS SHEET OF ALL MATERIAL AND EQUIPMENT.
- COMPLETE OPERATING AND MAINTENANCE INSTRUCTIONS FOR ALL EQUIPMENT.
- COMPLETE AND DATED MANUFACTURER'S WARRANTIES.

DRIPLINE NOTES

1. PLANS ARE DIAGRAMMATIC. INSTALL DRIPLINE AND COMPONENTS PER MANUFACTURERS INSTRUCTIONS AND INSTALLATION DETAILS.

2. INSTALL DRIPLINE A MAXIMUM OF 24" APART WITH EMITTERS TRIANGULARLY SPACED. INSTALL 2" FROM PERIMETER OF PLANTED AREA. THERE SHOULD BE A MINIMUM OF TWO DRIPLINE LATERALS IN EACH PLANTED AREA. DRIPLINE SHALL BE INSTALLED AT A CONSISTANT DEPTH THROUGHOUT THE CIRCUIT.

3. PLACE AIR/VACUUM RELIEF VALVES AT THE HIGHEST POINTS OF EACH ZONE AND JUST BELOW CHECK VALVES ON SLOPES. INSTALL ONE AIR/VACUUM RELIEF VALVE FOR EVERY 1125' OF TOTAL DRIPLINE PER ZONE.

4. PLACE FLUSH VALVES AT THE HYDRAULIC CENTER OF THE EXHAUST HEADER OR AT LOW POINT ON SLOPES.

5. INSTALL IN-LINE CHECK VALVES ON SLOPES GREATER THAN 3% AND WHERE LOW-LINE DRAINAGE COULD CAUSE WET AREAS IN THE LOWEST AREAS OF AN IRRIGATION ZONE. CHECK VALVES SHALL BE PLACED EVERY 4-5 FEET BETWEEN DRIPLINE LATERALS AND BEFORE THE FLUSH VALVE.

6. ON ALL SLOPES AND MOUNDS, PLACE THE DRIPLINE LATERALS PARALLEL TO THE SLOPE CONTOUR WHERE POSSIBLE. INCREASE THE LATERAL SPACING BY 25% ON THE LOWER ONE-THIRD OF THE SLOPE TO AVOID EXCESS DRAINAGE.

7. PVC SUPPLY AND FLUSH LINE SIZING GUIDE (ALL SUPPLY AND FLUSH LINES SHALL BE THE SAME SIZE FOR THE ENTIRE ZONE):
- 0-6 GPM – 3/4"
- 6.1-15 GPM – 1"

8. FITTINGS SHALL BE OF THE SAME MANUFACTURER AS DRIPLINE.

9. STAPLE DRIPLINE TO GROUND EVERY 2 FEET. USE ADDITIONAL STAPLES OVER EACH TEE, ELBOW OR CROSS. USE U-SHAPED STAPLES TO AVOID PINCHING THE DRIPLINE.

10. THOROUGHLY FLUSH EACH INSTALLATION SEGMENT TO ENSURE NO DEBRIS CONTAMINATION OCCURS.

11. RUN THE DRIPLINE SYSTEM EVERY DAY OR EVERY OTHER DAY TO ESTABLISH PLANT MATERIAL. MAINTAIN A CONSISTENT MOISTURE BALANCE IN THE SOIL. IT IS IMPORTANT TO KEEP THE SOIL MOIST WITHOUT SATURATION.

ADDITIONAL DRIPLINE NOTES

1. ALL SUBSURFACE DRIP AREAS ARE DESIGNED TO BE 12" ROW SPACING WITH 12" EMITTER SPACING EXCEPT AS FOLLOWS:

NONE

IRRIGATION LEGEND

SYMBOL	DESCRIPTION	MANUFACTURER	PRODUCT	MODEL NUMBER	NOTES
M	POINT OF CONNECTION	ASSURED AUTOMATION	1-1/2" SUB-METER	WM150	PER MANUFACTURER'S RECOMMENDATIONS
	BACKFLOW PREVENTOR	FEBCO	1-1/2" BACKFLOW PREVENTOR W/ PRESSURE REGULATOR, IN ENCLOSURE	825Y	PER MANUFACTURER'S RECOMMENDATIONS, SEE DETAIL 1/L3.02
C	CONTROLLER	HUNTER	PRO-HC W/ RAIN CLIK AND HC-150-FLOW SENSOR	PHC-1200	12 STATION HYDRAWISE COMPATIBLE CONTROLLER, SEE DETAIL 9/L3.02
WS	WEATHER SENSOR	HUNTER	SOLAR-SYNC ETO-RAIN-FREEZE SENSOR	WSS-SEN	WIRELESS SENSOR, LOCATE NO MORE THAN 800' FROM CONTROLLER
F	FLOW SENSOR	HUNTER	1-1/2" FLOW-SYNC SENSOR	HC-150-FLOW	PER MANUFACTURER'S RECOMMENDATIONS, SEE DETAIL 2/L3.02
M	MASTER VALVE	HUNTER	1-1/2" REMOTE CONTROL VALVE WITH FILTER SCREEN, NORMALLY CLOSED	ICV-151G-FS	PER MANUFACTURER'S RECOMMENDATIONS, SEE DETAIL 3/L3.02
	BRASS SHUT-OFF VALVE	NIBCO	LINE-SIZE BRASS GATE VALVE	TI-8	PER MANUFACTURER'S RECOMMENDATIONS, SEE DETAIL 5/L3.02
	HOSE SPIGOT	LASCO	3/4" INVERTED GARDEN VALVE	MODEL 06-1342	PER MANUFACTURER'S RECOMMENDATIONS, SEE DETAIL 4/L3.02
	MAIN LINE	-	PVC SCH 40 W/ SOLVENT WELD FITTINGS	-	SIZE: 1-1/2", SEE DETAIL 8/L3.02
	LATERAL LINE	-	PVC CLASS 200 W/SOLVENT WELD FITTINGS	-	SIZE: 0 - 6 GPM = 3/4", 7 - 18 GPM = 1", SEE DETAIL 8/L3.02
	REMOTE CONTROL VALVE	HUNTER	DRIP ZONE CONTROL KITS	PCZ-101-LF-40	USE DRIP ZONE KITS AT ALL SUBSURFACE DRIP, BUBBLERS, AND EMITTERS. SEE DETAIL 6/L3.02
	REMOTE CONTROL VALVE	HUNTER	GLOBE VALVES	ICV-101G	ICV TO BE USED AT POP-UP SPRAYS, SEE DETAIL 7/L3.02
	SUBSURFACE DRIP ZONE	HUNTER	0.4 GPM DRIP LINE W/ CHECK VALVES	HDL-04-18-CV	12" ROW AND 12" EMITTER SPACING UNLESS OTHERWISE NOTED, SEE DETAILS 1-4/L3.03
	TREE BUBBLERS	HUNTER	18" ROOT ZONE WATERING SYSTEM	RZWS-18-25-CV	0.25 GPM BUBBLER, SEE DETAIL 5/L3.02
	SHRUB EMITTERS	HUNTER	0.50 GPH EMITTERS W/BARBED END	HE-050-B	PLACE TWO (2) PER 15 GAL. SHRUBS, SEE DETAIL 7/L3.03
	FULL CIRCLE ROTATOR	HUNTER	MP ROTATOR NOZZLE ON 12" POP-UP	MP1000-360 OR MP2000-360	PER MANUFACTURER'S RECOMMENDATIONS, SEE DETAIL 6/L3.03
	ADJUSTABLE ROTATOR	HUNTER	MP ROTATOR NOZZLE ON 12" PO-UP	MP1000-90 OR MP2000-90	V.I.F., USE MP-800 SERIES WHERE NECESSARY, SEE DETAIL 6/L3.03

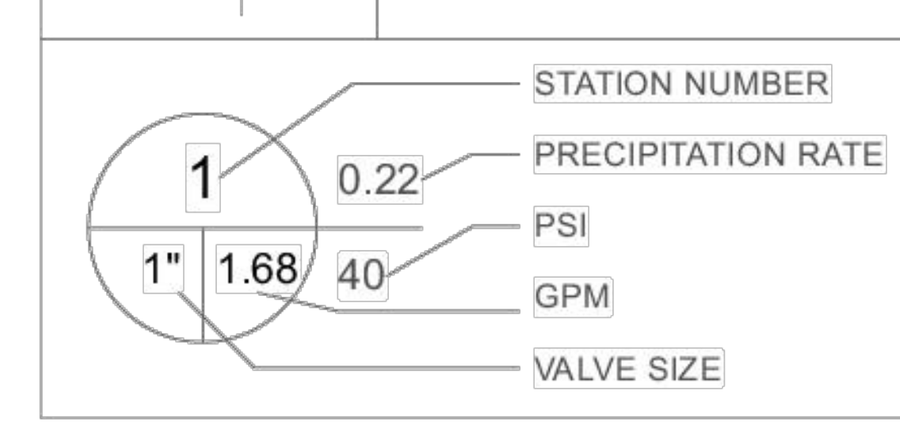

24 Tehema, Carmel CA 93923

HYDROZONE TABLE COMPLETE FOR ALL VALVES

Valve Number	Irrigation Method	Plant type (High, Med, Low)	GPM	Precipitation Rate (in/hr)	Area (sq.ft.)	% of Landscape
1	Emitters	Low	3.32	0.25	1288	14.0%
2	Emitters	Low	3.90	0.26	1466	16.0%
3	Emitters	Low	3.02	0.23	1274	13.9%
4	Sub-surface Drip	Low	5.19	0.52	790	8.6%
5	Sub-surface Drip	Low	7.81	0.52	1173	12.8%
6	Emitters	Low	2.47	0.23	1056	11.5%
7	Emitters	Low	0.73	0.18	400	4.4%
8	Emitters	Low	1.06	0.11	913	9.9%
9	Emitters	Low	1.57	0.20	764	8.3%
10	Bubblers	Low	1.50	2.33	62	0.7%
TEMP.						
11	MP Rotators	Low	11.65	0.41	2702	27.4%
12	MP Rotators	Low	15.36	0.32	4560	46.3%
13	MP Rotators	Low	11.35	0.97	1130	11.5%
14	MP Rotators	Low	10.16	0.67	1465	14.9%
				TOTAL SF (PERM)	**9186**	100%
				TOTAL SF (TEMP)	**9857**	100%

NOT FOR CONSTRUCTION

ONLY THE ORIGINAL, SIGNED HARD COPY OF THIS DRAWING CONSTITUTES WILD LAND WORKSHOP'S PROFESSIONAL WORK PRODUCT, ELECTRONIC COPIES DO NOT. WILD LAND WORKSHOP WILL NOT BE RESPONSIBLE FOR ANY MODIFICATIONS MADE TO THIS DRAWING ELECTRONIC OR OTHERWISE THAT IS NOT SIGNED BY WILD LAND WORKSHOP. IF THE CONTRACTOR ENCOUNTERS ERRORS OR DISCREPANCIES ON THE DRAWINGS, OR SITE CONDITIONS WHICH PREVENT OR DELAY THE COMPLETION OF WORK AS INDICATED, THE CONTRACTOR SHALL NOTIFY THE OWNER AND LANDSCAPE ARCHITECT BY THE TIME OF BID OF ALL SUCH ERRORS, DISCREPANCIES AND OMISSIONS. THE CONTRACTOR SHALL INDEMNIFY AND HOLD THE LANDSCAPE ARCHITECT AND THE OWNER HARMLESS IF AFTER CONTRACTING FOR THE WORK HE HAS MONETARY DAMAGE BECAUSE OF SITE CONDITIONS, ERRORS, DISCREPANCIES OR OMISSIONS AT THE TIME OF BID.

WILD LAND WORKSHOP
LANDSCAPE ARCHITECTURE
MONTEREY CA (831)238-8459

LICENSED LANDSCAPE ARCHITECT
MARIE S GOULET
6335
Signature
06/30/2026
Renewal Date
01/31/2025
Date
STATE OF CALIFORNIA

seal

ARCHITECT
SIGNUM ARCHITECTURE, LLP
1050 ADAMS STREET, SUITE D
ST. HELENA, CA 94574
707.963.8831

CIVIL ENGINEER
L&S ENGINEERING AND SURVEYING
2460 GARDEN ROAD, SUITE G
MONTEREY, CA 93940
831.655.2723

team

LISA AND BRAD SERWIN

owner

HILLTOP RESIDENCE

24 TEHAMA,
CARMEL, CA 93923

project

no.	description	
3	PERMIT SET	01.31.2025
2	COORDINATION SET	12.04.2024
1	STEP 3 REVISION	08.23.2024

date: 01.22.2025

IRRIGATION LEGEND

sheet title

L3.01

sheet no.

of

2/4/2025 10:01 AM

"I, MARIE GOULET, CERTIFY THAT THIS LANDSCAPING AND IRRIGATION PLAN COMPLIES WITH ALL MONTEREY COUNTY LANDSCAPING REQUIREMENTS INCLUDING USE OF NATIVE DROUGHT TOLERANT, NON-INVASIVE SPECIES, LIMITED TURF AND LOW FLOW, WATER CONSERVING IRRIGATION FIXTURES."

CONTROLLER AND SENSOR NOTES:

1. MOUNT CONTROLLER LCD SCREEN AT EYE LEVEL. CONTROLLER SHALL BE HARD-WIRED TO GROUNDED 110 VAC POWER SOURCE. PRIOR TO INSTALLATION, CONFIRM LOCATION OF CONTROLLER WITH OWNER

2. ALL SENSORS SHALL BE INSTALLED PER MANUFACTURER'S INSTALLATION INSTRUCTIONS

3. ALL ELECTRICAL WORK TO CONFORM WITH LOCAL CODES

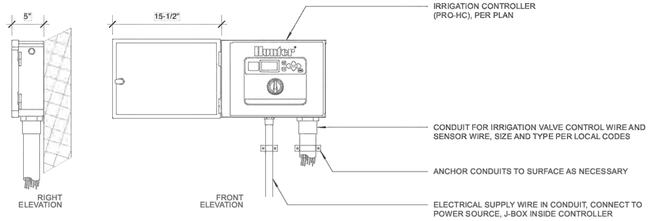

9 CONTROLLER W/ FLOW & SOLAR SENSOR - INTERIOR
N.T.S.

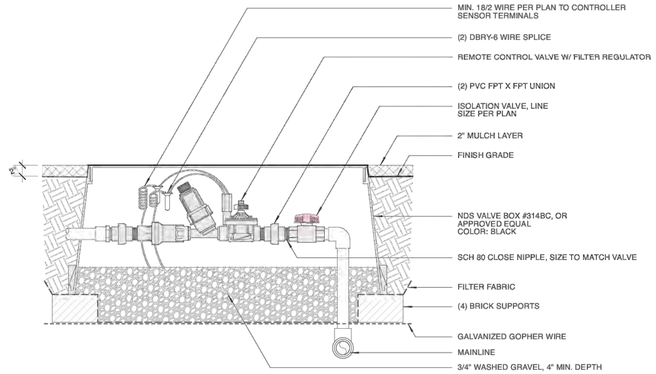

6 DRIP CONTROL ZONE KIT W/ UNIONS AND SHUT-OFF
N.T.S.

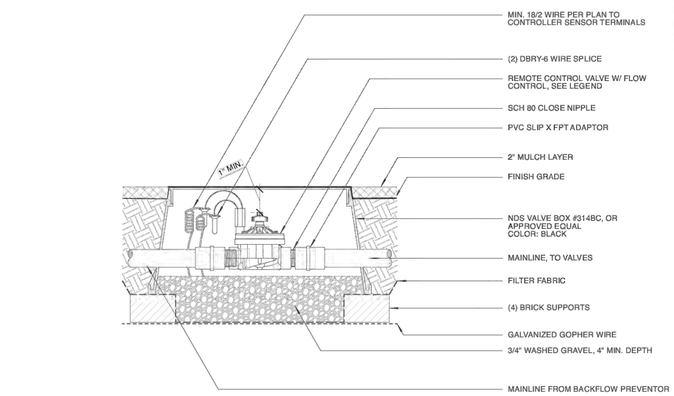

3 MASTER VALVE: IN-LINE
N.T.S.

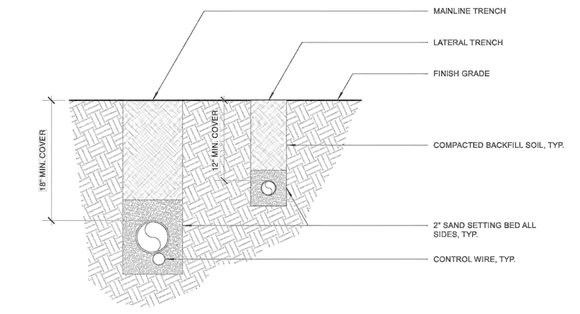

8 MAINLINE AND LATERAL PIPE TRENCHING AND COVER
N.T.S.

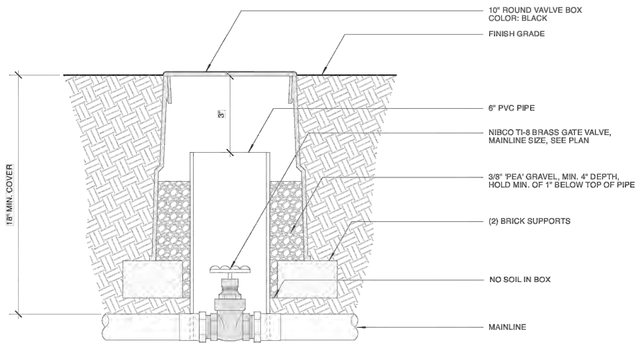

5 GATE VALVE IN 10" ROUND BOX
N.T.S.

NOTES:

1. DISTANCE 'A' TO BE 10 X DIA. OF STRAIGHT PIPE FREE OF FITTINGS OR ELBOWS (EXAMPLE: 1-1/2" PIPE DIA X 10 = 15")

2. DISTANCE 'B' TO BE 5 X DIA. OF STRAIGHT PIPE FREE OF FITTINGS OR ELBOWS (EXAMPLE: 1-1/2" PIPE DIA X 5 = 7-1/2")

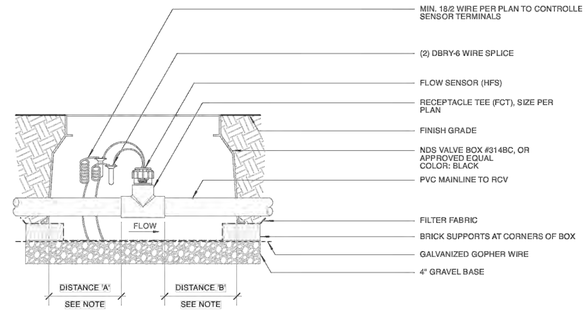

2 FLOW SENSOR
N.T.S.

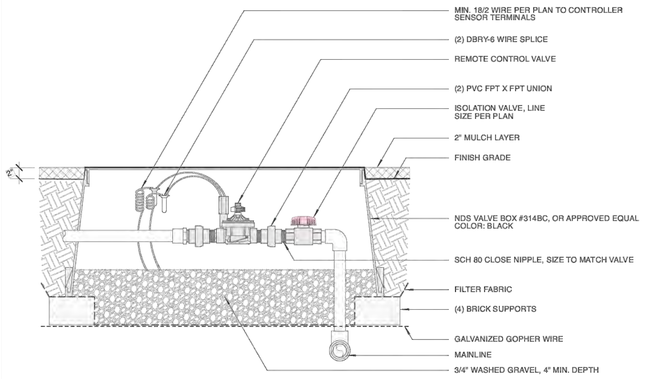

7 REMOTE CONTROL VALVE W/ UNIONS AND SHUT-OFF
N.T.S.

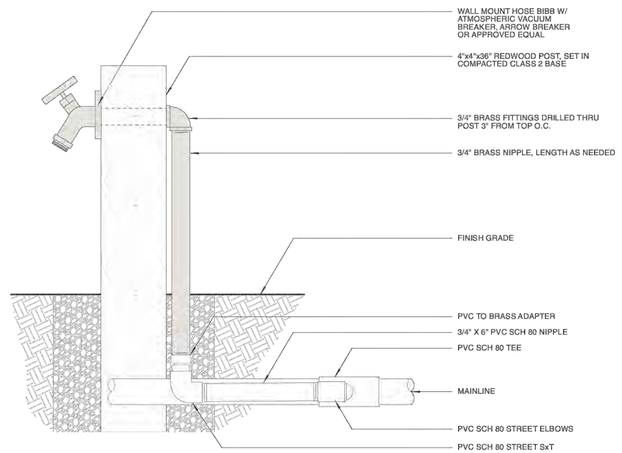

4 BRASS HOSE BIB MOUNTED ON POST
N.T.S.

BACKFLOW PREVENTOR NOTES:

1. CONTRACTOR TO VERIFY PRESSURE AT THE POINT OF CONNECTION PRIOR TO INSTALLATION OF THE BACKFLOW PREVENTER AND PRESSURE REGULATOR

2. GALV. FITTINGS AND PIPE THAT ARE IN CONTACT WITH CONC. OR SOIL SHALL BE WRAPPED IN 3M™ SCOTCHRAP™ ALL-WEATHER CORROSION PROTECTION TAPE (1/2" OVERLAP MIN.)

3. DIELECTRIC FITTINGS SHALL BE USED WHERE DISSIMILAR METALS COME INTO CONTACT.

4. CONTRACTOR SHALL INSTALL ALL BACKFLOW, PREVENTOR, ENCLOSURE, AND ALL COMPONENTS IN ACCORDANCE WITH MANUFACTURER'S RECOMMENDATIONS AND INSTRUCTIONS.

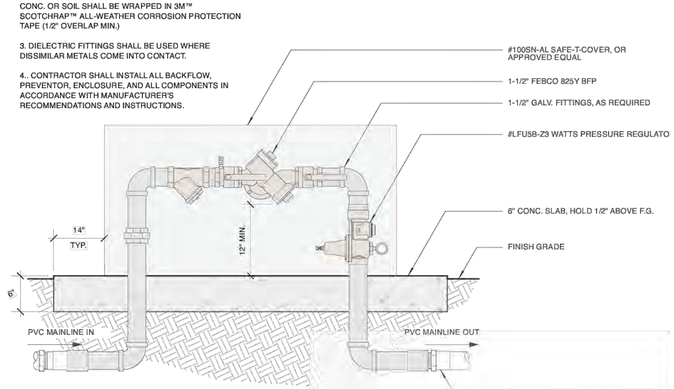

1 BACK FLOW PREVENTOR W/ ENCLOSURE
N.T.S.

NOT FOR CONSTRUCTION

ONLY THE ORIGINAL, SIGNED HARD COPY OF THIS DRAWING CONSTITUTES WILD LAND WORKSHOP'S PROFESSIONAL WORK PRODUCT. ELECTRONIC COPIES DO NOT. WILD LAND WORKSHOP RETAINS ALL COPYRIGHTS AND OTHER PROPRIETARY RIGHTS TO ITS CONTENT. IF THE CONTRACTOR ENCOUNTERS ERRORS OR DISCREPANCIES ON THE DRAWINGS, OR SITE CONDITIONS WHICH PREVENT OR DELAY THE COMPLETION OF WORK AS INDICATED, THE CONTRACTOR SHALL NOTIFY THE OWNER AND LANDSCAPE ARCHITECT BY THE TIME OF BID OF ALL SUCH ERRORS, DISCREPANCIES, AND CONDITIONS. IN THE ABSENCE OF SUCH NOTIFICATION, THE CONTRACTOR SHALL BE RESPONSIBLE FOR ANY CORRECTIVE WORK.

WILD LAND
WORKSHOP
LANDSCAPE ARCHITECTURE
MONTEREY CA (831)238-8459

LICENSED LANDSCAPE ARCHITECT
MARIE S GOULET
6335
06/30/2026
01/31/2025
Date
STATE OF CALIFORNIA

seal

ARCHITECT
SIGNUM ARCHITECTURE, LLP
1050 ADAMS STREET, SUITE D
ST. HELENA, CA 94574
707.963.8831

CIVIL ENGINEER
L&S ENGINEERING AND SURVEYING
2460 GARDEN ROAD, SUITE G
MONTEREY, CA 93940
831.655.2723

team

LISA AND BRAD SERWIN
owner

HILLTOP RESIDENCE

24 TEHAMA,
CARMEL, CA 93923
project

no.	description	date:
3	PERMIT SET	01.31.2025
2	COORDINATION SET	12.04.2024
1	STEP 3 REVISION	08.23.2024

date: 01.22.2025

IRRIGATION DETAILS
sheet title

L3.02
sheet no.
of

2/4/2025 10:02 AM

"I, MARIE GOULET, CERTIFY THAT THIS LANDSCAPING AND IRRIGATION PLAN COMPLIES WITH ALL MONTEREY COUNTY LANDSCAPING REQUIREMENTS INCLUDING USE OF NATIVE DROUGHT TOLERANT, NON-INVASIVE SPECIES, LIMITED TURF AND LOW FLOW, WATER CONSERVING IRRIGATION FIXTURES."

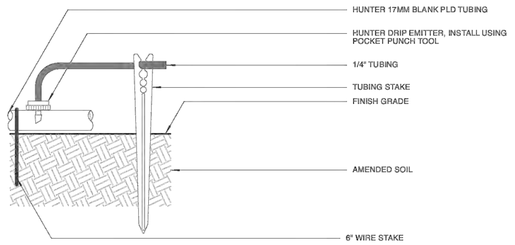

7 EMITTER W/ 1/4" TUBING AND STAKE
N.T.S.

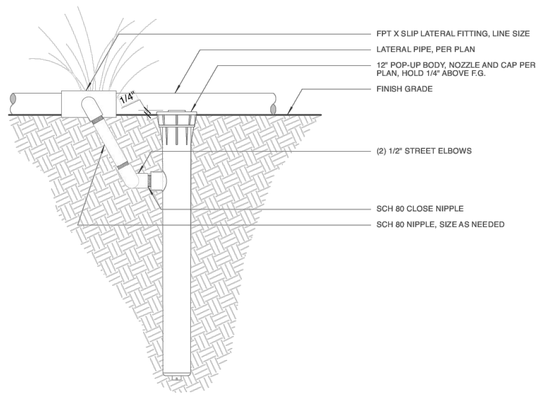

6 12" POP-UP BODY W/ FIELD BUILT SWING ARM AND AT-GRADE LATERAL PIPE
N.T.S.

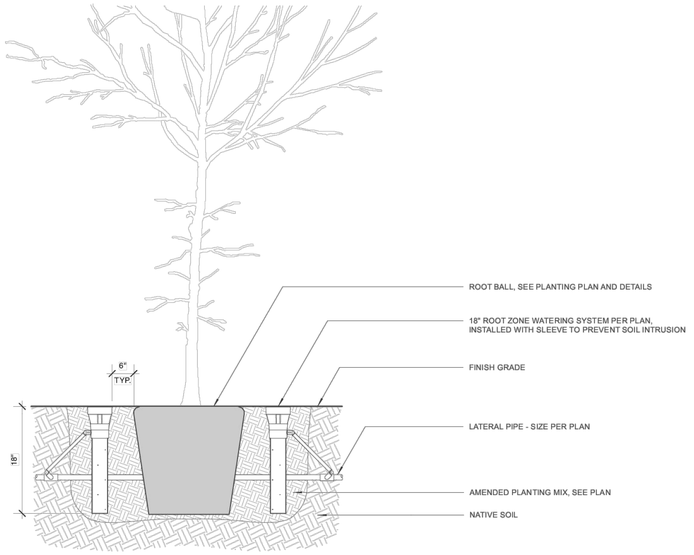

5 ROOT ZONE WATERING SYSTEM - 18"
N.T.S.

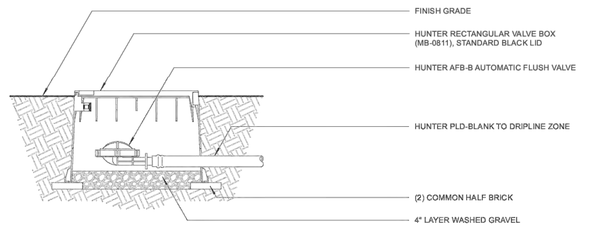

4 AUTOMATIC FLUSH VALVE
N.T.S.

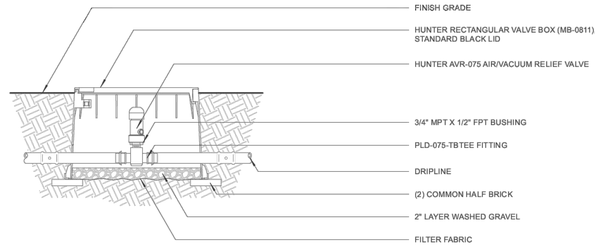

3 AIR RELIEF VALVE - DRIPLINE
N.T.S.

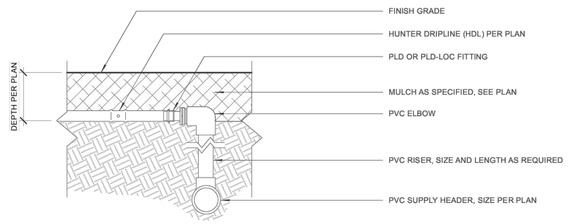

2 DRIPLINE CONNECTION W/ PVC RISER AND ELBOW
N.T.S.

DRIPLINE NOTES:

1. AIR RELIEF/VACUUM VALVE INSTALLED IN BOX AT OPTIMAL HIGHEST POINT FROM CONTROL ZONE KIT. MULTIPLE AIR RELIEF VALVES MAY BE NEEDED TO ACCOMODATE DIFFERENCES IN GRADE.

2. OPTIONAL ECO-INDICATOR TO BE INSTALLED AT OPTIMAL FURTHEST POINT FROM CONTROL ZONE KIT IN CLEAR VIEW WHEN ACTIVATED.

3. FLUSH VALVE TO BE INSTALLED AT OPTIMAL FURTHEST POINT FROM CONTROL ZONE KIT TO ALLOW FOR MAXIMUM DEBRIS FLUSH IN SYSTEM.

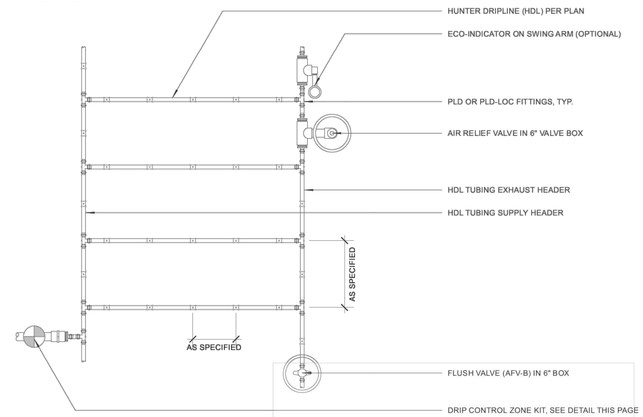

1 PLAN VIEW: DRIPLINE @ PLANTER BED TYPICAL LAYOUT
N.T.S.

NOT FOR CONSTRUCTION

ONLY THE ORIGINAL, SIGNED HARD COPY OF THIS DRAWING CONSTITUTES FIELD LAND WORKSHOP'S PROFESSIONAL WORK PRODUCT. ELECTRONIC COPIES DO NOT. WILD LAND WORKSHOP WILL NOT BE RESPONSIBLE FOR ANY MISCHANGES TO THE DRAWING ELECTRONIC CONTENT. YOU CAN'T STOP IT. WILD LAND WORKSHOP

IF THE CONTRACTOR DISCOVERS ERRORS OR DISCREPANCIES ON THE DRAWINGS, OR SITE CONDITIONS WHICH PREVENT OR STOP THE COMPLETION OF WORK AS INDICATED, THE CONTRACTOR SHALL NOTIFY THE OWNER AND LANDSCAPE ARCHITECT BY THE TIME OF BID OF ALL SUCH ERRORS, DISCREPANCIES AND CONDITIONS. IN THE ABSENCE OF SUCH NOTIFICATION, THE CONTRACTOR SHALL ASSUME FULL RESPONSIBILITY FOR ANY AND ALL CORRECTIONS REQUIRED.

WILD LAND
WORKSHOP
LANDSCAPE ARCHITECTURE
MONTEREY CA (831)238-8459

LICENSED LANDSCAPE ARCHITECT
MARIE S GOULET
6335
06/30/2026
01/31/2025
Date
STATE OF CALIFORNIA

seal

ARCHITECT
SIGNUM ARCHITECTURE, LLP
1050 ADAMS STREET, SUITE D
ST. HELENA, CA 94574
707.963.8831

CIVIL ENGINEER
L&S ENGINEERING AND SURVEYING
2460 GARDEN ROAD, SUITE G
MONTEREY, CA 93940
831.655.2723

team

LISA AND BRAD SERWIN

owner

HILLTOP RESIDENCE

24 TEHAMA,
CARMEL, CA 93923

project

no.	description	date:
3	PERMIT SET	01.31.2025
2	COORDINATION SET	12.04.2024
1	STEP 3 REVISION	08.23.2024

date: 01.22.2025

IRRIGATION DETAILS

sheet title

L3.03

sheet no.
of

2/4/2025 10:04 AM

"I, MARIE GOULET, CERTIFY THAT THIS LANDSCAPING AND IRRIGATION PLAN COMPLIES WITH ALL MONTEREY COUNTY LANDSCAPING REQUIREMENTS INCLUDING USE OF NATIVE DROUGHT TOLERANT, NON-INVASIVE SPECIES, LIMITED TURF AND LOW FLOW, WATER CONSERVING IRRIGATION FIXTURES."

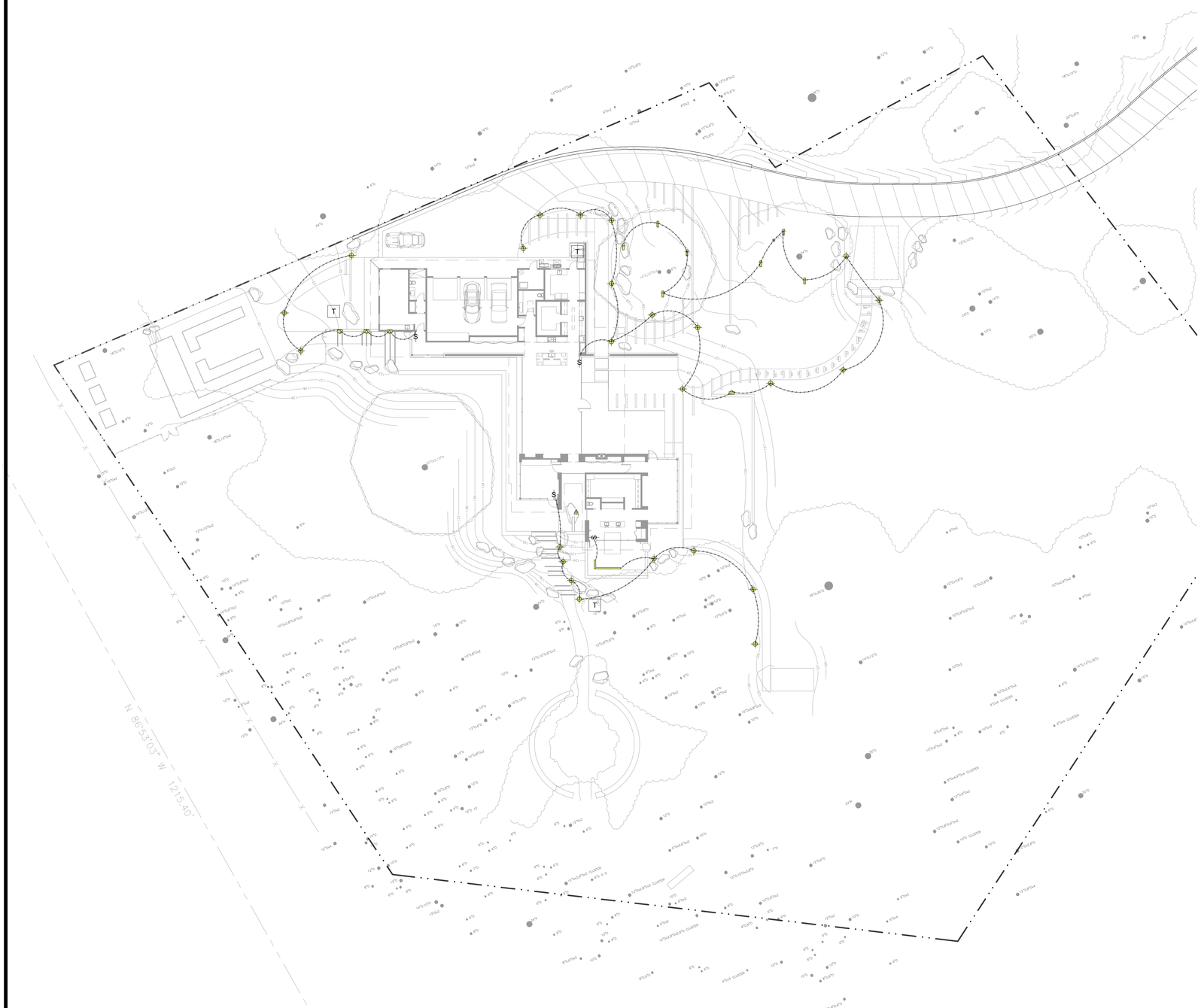

LEGEND

	TYPE	WATTS	MANUF - MODEL
L1	PATH LIGHT	1.5	STEEL - PATH LIGHT 2700 K. 18" TALL. AVAILABLE FROM ALLEN BUBAR, ALLENKEYELECTRIC@ICLOUD.COM, (831) 484-560
L2	WALL LIGHT	4.2	WALL LIGHT: MO - ZDC - RD - AB BY FX LUMINAIRE. WWW.FXL.COM
L3	PENDANT LIGHT	4.0	FX - VE - ZD - 3LED - PS
L4	LED STRIP LIGHT	.6 / FT	FX - SRP STRIP LIGHT 2700 K
L5	FOUNTAIN LIGHT		TBD - DARK SKY COMPLIANT
T	TRANSFORMER		CONFIRM LOCATION IN FIELD
	GFCI OUTLET		110 V GFCI OUTLET IN WATERPROOF BOX, LOCATIONS TO BE REVIEWED AND APPROVED PRIOR TO TRENCHING AND INSTALLATION
S	SWITCH		SEE ELECTRICAL DRAWING

GENERAL NOTES:

1) SEE ELECTRICAL DRAWINGS
2) CONTRACTOR TO PROVIDE ALL CONDUIT, WIRING, SWITCHES, AND TRANSFORMERS NECESSARY TO INSTALL LIGHTS IN A MANNER CONSISTENT WITH THE MANUFACTURERS SPECIFICATIONS AND ALL LOCAL AND STATE CODES AND ORDINANCES.CONTRACTOR IS RESPONSIBLE FOR ROUTING AND WIRING CIRCUITS AS NECESSARY FOR OPTIMUM SYSTEM PERFORMANCE, AND DETERMINING LOADS FOR TRANSFORMERS
3) ELECTRICAL CONTRACTOR TO INSTALL IRRIGATION CLOCK AND TO COORDINATE WIRING FOR IRRIGATION CONTRACTOR
4) ACCENT AND AREA LIGHTS TO BE INSTALLED WITH 3' OF EXTRA WIRE FOR ADJUSTMENT IN FIELD.
5) POSITION LIGHTS IN FIELD. ADJUST TO MINIMIZE LIGHT SPILLAGE AND GLARE AND TO ACHIEVE DESIGN INTENT. FINAL LAYOUT AND LOCATIONS OF LIGHTS AND TRANSFORMER LOCATIONS TO BE APPROVED BY LANDSCAPE ARCHITECT.
6) FINAL ADJUSTMENTS SHALL BE MADE AT NIGHT WITH OWNER PRESENT FOR APPROVAL.
7) CONTRACTOR TO PROVIDE SUBMITTAL SHEETS OF ALL PROPOSED FIXTURES TO LANDSCAPE ARCHITECT FOR APPROVAL
8) IN CASE OF FIELD MODIFICATIONS, ELECTRICAL CONTRACTOR TO PROVIDE A SKETCH OF AS BUILT WIRING OVERLAID ON THIS DRAWING

L1 PATH LIGHT:



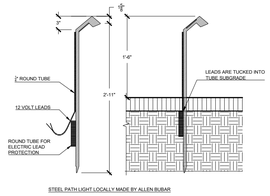

STEEL PATH LIGHT LOCALLY MADE BY ALLEN BUBAR

L2 WALL AND DECK LIGHT:



Round (RD)

20' 0 20 40'

1" = 20'

NOT FOR CONSTRUCTION

IF THE CONTRACTOR ENCOUNTERS ERRORS OR DISCREPANCIES ON THE DRAWINGS, OR SITE CONDITIONS WHICH PREVENT OR DELAY THE COMPLETION OF WORK AS INDICATED, THE CONTRACTOR SHALL NOTIFY THE OWNER AND LANDSCAPE ARCHITECT BY THE TIME OF BID OF ALL SUCH ERRORS, DISCREPANCIES OR CONDITIONS. IF CONTRACTOR DOES NOT NOTIFY OWNER AND LANDSCAPE ARCHITECT BY THAT TIME, CONTRACTOR SHALL ASSUME ALL RESPONSIBILITY FOR ANY AND ALL SUCH ERRORS, DISCREPANCIES OR CONDITIONS. ANY WORK DONE AFTER DISCOVERY OF SUCH ERRORS, DISCREPANCIES OR CONDITIONS SHALL BE AT CONTRACTOR'S RISK.

ONLY THE ORIGINAL, SIGNED HARD COPY OF THIS DRAWING CONSTITUTES WILD LAND WORKSHOP'S PROFESSIONAL WORK PRODUCT. ELECTRONIC COPIES DO NOT. WILD LAND WORKSHOP WILL NOT BE RESPONSIBLE FOR ANY MODIFICATIONS MADE TO THIS DRAWING. ELECTRONIC OR OTHERWISE, THAT IS NOT SIGNED BY WILD LAND WORKSHOP.

WILD LAND WORKSHOP
LANDSCAPE ARCHITECTURE
MONTEREY CA (831)238-8459

REGISTERED LANDSCAPE ARCHITECT
MARIE S GOULET
6335
06/30/2026
01/31/2025
Date
STATE OF CALIFORNIA

seal

ARCHITECT
SIGNUM ARCHITECTURE, LLP
1050 ADAMS STREET, SUITE D
ST. HELENA, CA 94574
707.963.8831

CIVIL ENGINEER
L&S ENGINEERING AND SURVEYING
2460 GARDEN ROAD, SUITE G
MONTEREY, CA 93940
831.655.2723

team

LISA AND BRAD SERWIN

owner

HILLTOP RESIDENCE

24 TEHAMA,
CARMEL, CA 93923

project

no.	description	date
3	PERMIT SET	01.31.2025
2	COORDINATION SET	12.04.2024
1	STEP 3 REVISION	08.23.2024

date: 01.22.2025

LANDSCAPE LIGHTING PLAN

sheet title

L4.00

sheet no.

of

2/4/2025 10:04 AM

"I, MARIE GOULET, CERTIFY THAT THIS LANDSCAPING AND IRRIGATION PLAN COMPLIES WITH ALL MONTEREY COUNTY LANDSCAPING REQUIREMENTS INCLUDING USE OF NATIVE DROUGHT TOLERANT, NON-INVASIVE SPECIES, LIMITED TURF AND LOW FLOW, WATER CONSERVING IRRIGATION FIXTURES."

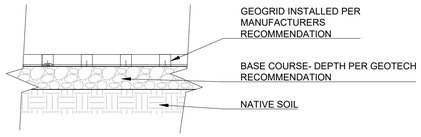

7 GEOGRID
SCALE: 1" = 1'-0"

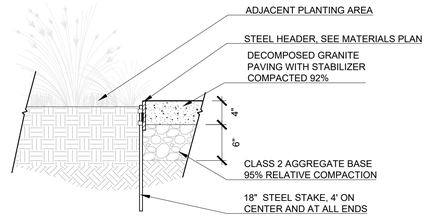

4 STABILIZED DECOMPOSED GRANITE PAVING
SCALE: 1" = 1'-0"

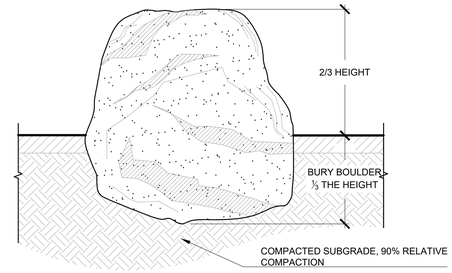

1 BOULDER
SCALE: 1" = 1'-0"

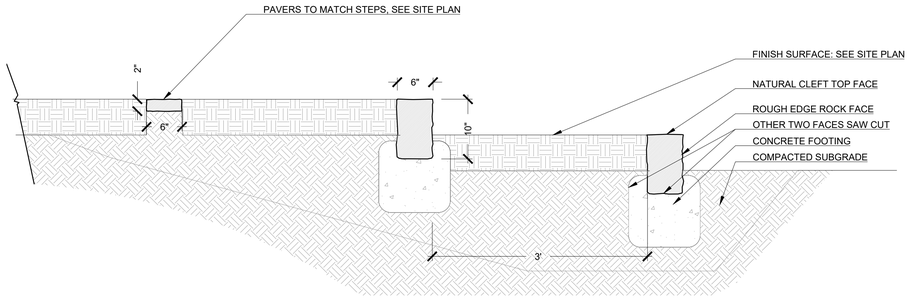

8 STONE TREADS AND PAVERS
SCALE: 1" = 1'-0"

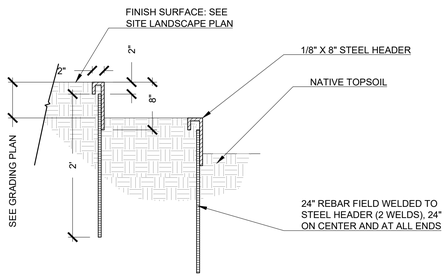

5 STEEL STEPS
SCALE: 1" = 1'-0"

2 GRAVEL PAVING
SCALE: 1" = 1'-0"

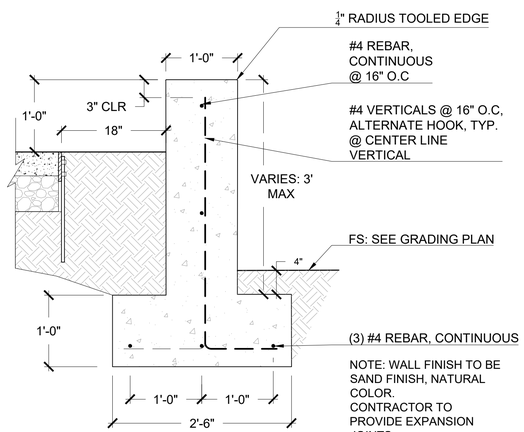

9 CONCRETE RETAINING WALL
SCALE: NTS

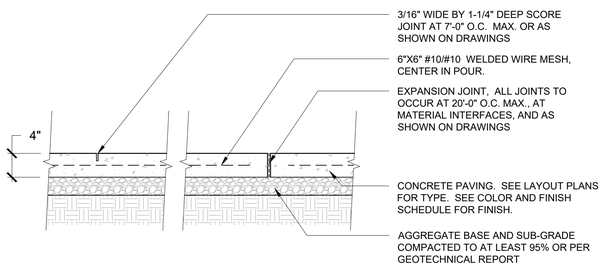

6 CONCRETE PAVING
SCALE: 1" = 1'-0"

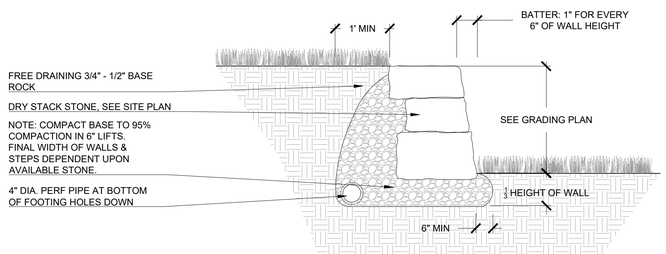

3 DRY STACK STONE WALL
SCALE: 3/4" = 1'-0"

NOT FOR CONSTRUCTION

IF THE CONTRACTOR ENCOUNTERS ERRORS OR DISCREPANCIES ON THE DRAWINGS, OR SITE CONDITIONS WHICH PREVENT OR AFFECT THE COMPLETION OF WORK AS INDICATED, THE CONTRACTOR SHALL NOTIFY THE OWNER AND LANDSCAPE ARCHITECT BY THE TIME OF BID OF ALL SUCH ERRORS, DISCREPANCIES AND CONDITIONS. THE CONTRACTOR SHALL CONFIRM ALL DIMENSIONS AND GRADES AT THE JOB SITE AND BE RESPONSIBLE FOR THE CORRECT FITTING OF ALL WORK. DO NOT SCALE DRAWINGS. ANY DISCREPANCIES FOUND IN THE DRAWINGS OR BETWEEN THE DRAWINGS AND THE JOB SITE CONDITIONS SHALL BE REPORTED TO THE LANDSCAPE ARCHITECT IMMEDIATELY FOR ATTENTION BEFORE PROCEEDING WITH THE WORK. THE CONTRACTOR SHALL BE RESPONSIBLE FOR ANY AND ALL CORRECTIONS OF WORK DONE IN CONFLICT WITH THE DRAWINGS AND SPECIFICATIONS WHICH COULD HAVE BEEN AVOIDED BY PRIOR NOTIFICATION.

ONLY THE ORIGINAL, SIGNED HARD COPY OF THIS DRAWING CONSTITUTES WILD LAND WORKSHOP'S PROFESSIONAL WORK PRODUCT. ELECTRONIC COPIES DO NOT. WILD LAND WORKSHOP WILL NOT BE RESPONSIBLE FOR ANY MODIFICATIONS MADE TO THIS DRAWING ELECTRONICALLY OR OTHERWISE. ANY ALTERED SIGNED BY WILD LAND WORKSHOP.

WILD LAND WORKSHOP
LANDSCAPE ARCHITECTURE
MONTEREY CA (831)238-8459

LICENSED LANDSCAPE ARCHITECT
MARIE S GOULET
6335
Renewal
06/30/2026
01/31/2025
Date
STATE OF CALIFORNIA

seal

ARCHITECT
SIGNUM ARCHITECTURE, LLP
1050 ADAMS STREET, SUITE D
ST. HELENA, CA 94574
707.963.8831

CIVIL ENGINEER
L&S ENGINEERING AND SURVEYING
2460 GARDEN ROAD, SUITE G
MONTEREY, CA 93940
831.655.2723

team

LISA AND BRAD SERWIN
owner

HILLTOP RESIDENCE

24 TEHAMA,
CARMEL, CA 93923
project

no.	description	
3	PERMIT SET	01.31.2025
~~2~~	~~PERMIT SET~~	~~05/14/2024~~
2	CORRECTION SET	05/14/2024
~~1~~	~~SITE PLAN REVISION~~	~~05.31.2024~~
1	SITE PLAN REVISION	05.31.2024

date: 01.22.2025

CONSTRUCTION DETAILS
sheet title

L5.00
sheet no.
of

2/4/2025 10:01 AM

"I, MARIE GOULET, CERTIFY THAT THIS LANDSCAPING AND IRRIGATION PLAN COMPLIES WITH ALL MONTEREY COUNTY LANDSCAPING REQUIREMENTS INCLUDING USE OF NATIVE DROUGHT TOLERANT, NON-INVASIVE SPECIES, LIMITED TURF AND LOW FLOW, WATER CONSERVING IRRIGATION FIXTURES."

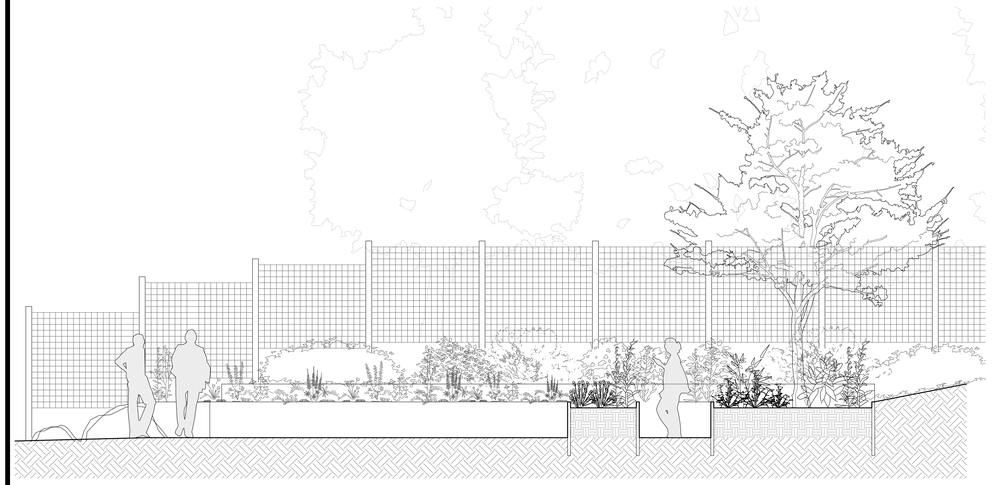

4 EAST/WEST SECTION ELEVATION VEGETABLE GARDEN
SCALE: 1/4" = 1' 0"

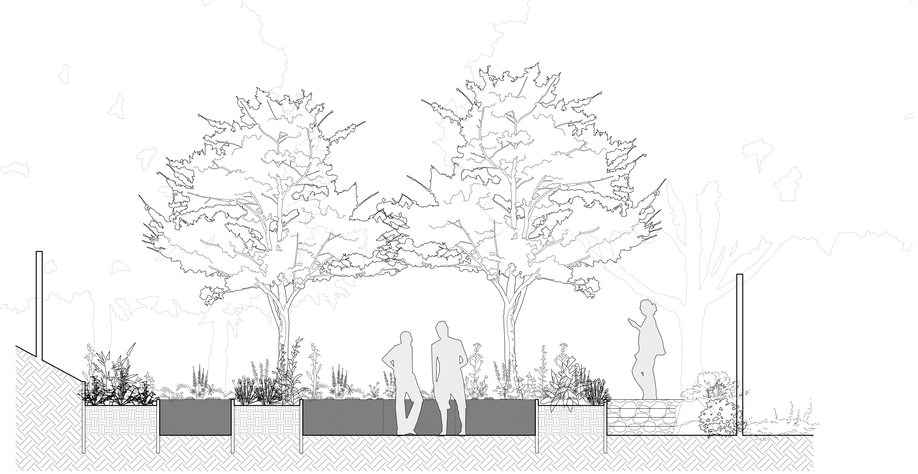

1 NORTH/SOUTH SECTION ELEVATION VEGETABLE GARDEN
SCALE: 1/4" = 1' 0"

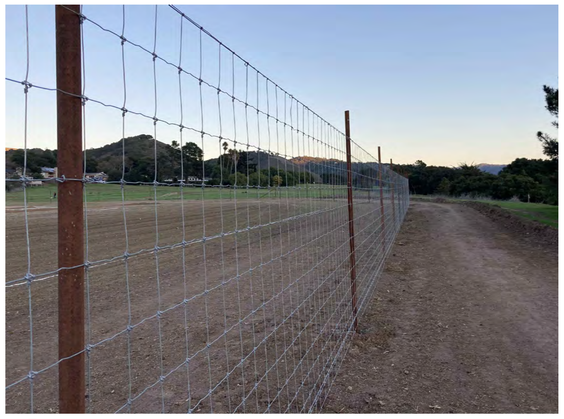

5 DEER FENCE
SCALE: NTS





2 ARCHITECTURAL FENCE AND GATE
SCALE: NTS

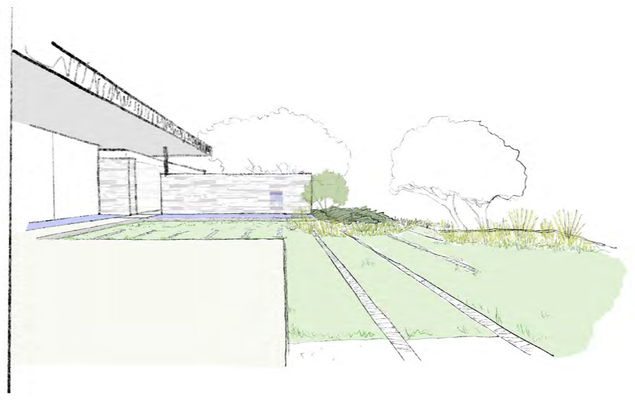

6 REFLECTING POOL
SCALE: NTS
2" DEEP RECIRCULATING REFLECTING POOL MADE FROM POWDER COATED STEEL. INCLUDES FILTRATION AND AUTOFILL.



3 OFFICE WATER FEATURE SKETCH
SCALE: NTS
WATER FEATURE WITH SPOUT FLOWING OVER NATURAL BOULDER TO UNDERGROUND WATERPROOF SUMP. PUMP, FILTER AND AUTOFILL INCLUDED IN REMOTE LOCATION.

NOT FOR CONSTRUCTION

WILD LAND WORKSHOP
LANDSCAPE ARCHITECTURE
MONTEREY CA (831)238-8459

LICENSED LANDSCAPE ARCHITECT
MARIE S GOULET
6335
Registered Date
06/30/2026
Expiration Date
01/31/2025
Date
STATE OF CALIFORNIA

seal

ARCHITECT
SIGNUM ARCHITECTURE, LLP
1050 ADAMS STREET, SUITE D
ST. HELENA, CA 94574
707.963.8831

CIVIL ENGINEER
L&S ENGINEERING AND SURVEYING
2460 GARDEN ROAD, SUITE G
MONTEREY, CA 93940
831.655.2723

team

LISA AND BRAD SERWIN
owner

HILLTOP RESIDENCE

24 TEHAMA,
CARMEL, CA 93923

project

no.	description	date
3	PERMIT SET	01.31.2025
2	COORDINATION SET	12.04.2024
1	STEP 3 REVISION	08.23.2024

date: 01.22.2025

CONSTRUCTION DETAILS

sheet title

L5.01

sheet no.

of

ONLY THE ORIGINAL, SIGNED HARD COPY OF THIS DRAWING CONSTITUTES WILD LAND WORKSHOP'S PROFESSIONAL WORK PRODUCT. ELECTRONIC COPIES DO NOT. WILD LAND WORKSHOP WILL NOT BE RESPONSIBLE FOR ANY MODIFICATIONS MADE TO THIS DRAWING ELECTRONIC OR OTHERWISE THAT IS NOT SIGNED BY WILD LAND WORKSHOP IF THE CONTRACTOR ENCOUNTERS ERRORS OR DISCREPANCIES ON THE DRAWINGS, OR SITE CONDITIONS WHICH PREVENT OR DELAY THE COMPLETION OF WORK AS INDICATED, THE CONTRACTOR SHALL NOTIFY THE OWNER AND LANDSCAPE ARCHITECT BY THE TIME OF BID OF ALL SUCH ERRORS, DISCREPANCIES AND OMISSIONS. THE CONTRACTOR SHALL INDEMNIFY AND HOLD THE LANDSCAPE ARCHITECT AND THE OWNER HARMLESS IF AFTER CONTRACTING FOR THE WORK HE HAS MONETARY DAMAGE BECAUSE OF SITE CONDITIONS, ERRORS, DISCREPANCIES OR OMISSIONS AT THE TIME OF BID.

2/4/2025 10:03 AM

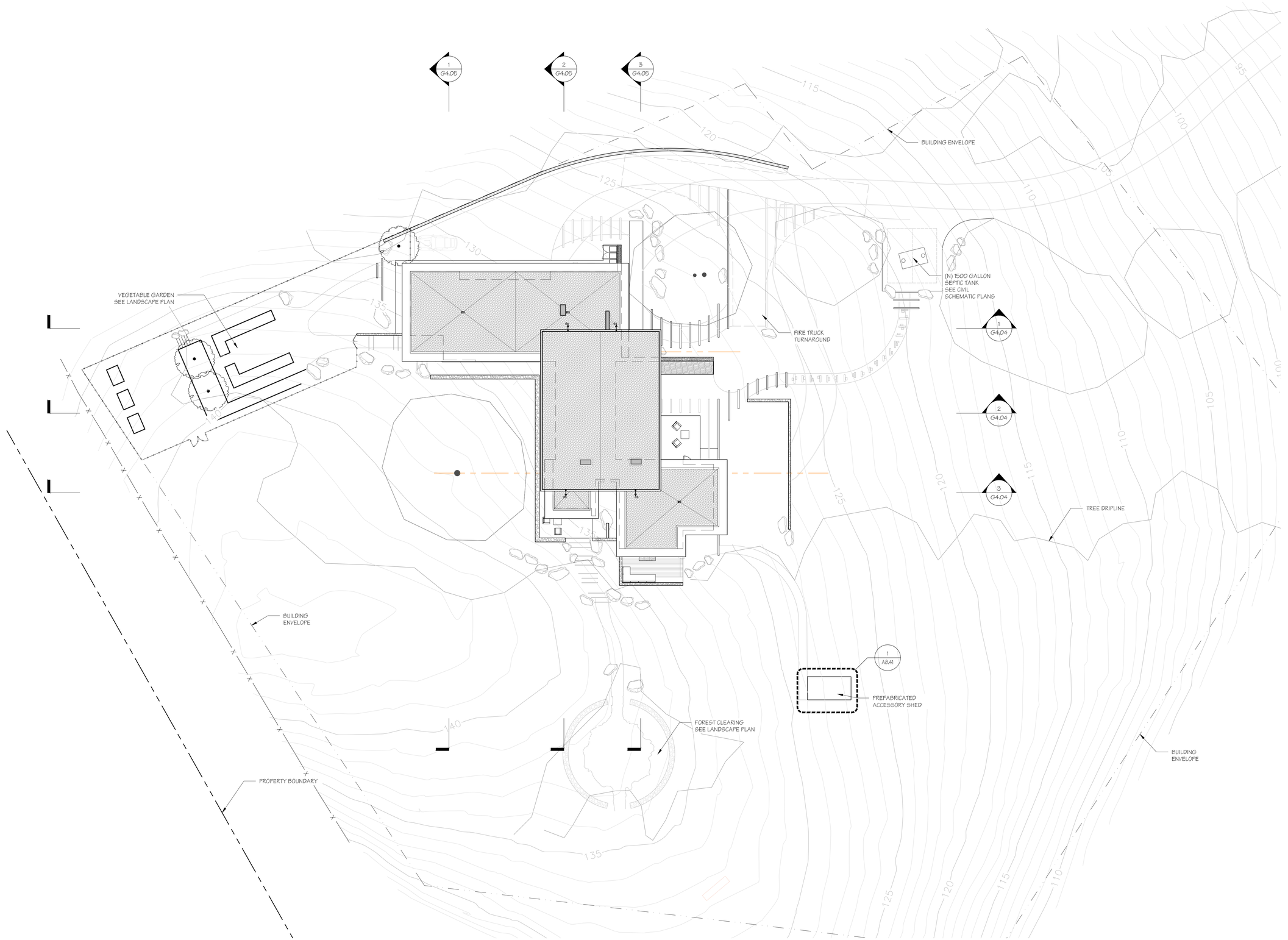

AREA PLAN
SCALE: 1/16" = 1'-0"

1

N
TRUE NORTH

signum
architecture

JUANCARLOS FERNANDEZ
PROJECT DESIGNER

SIGNUM ARCHITECTURE, LLP 707 963 8831
1675 2nd St, Napa, CA 94559

These drawings are the property of Signum Architecture and have been prepared specifically for this project. These drawings are not to be used for any other project, by any other entity or in another location.

CARMEL
SERWIN RESIDENCE

24 TEHAMA
CARMEL, CA 93923
APN 169-421-045

PROJECT NUMBER	2314
DATE	01/31/2025
CHECKED BY	JCF
DRAWN BY	AVH
SCALE	AS NOTED

REVISIONS

100% SCHEMATIC DESIGN	08/07/2024
DESIGN REVIEW STEP 4	01/22/2025
BUILDING PERMIT	01/31/2025

SHEET NAME

AREA PLAN

SHEET NUMBER

A1.01

BUILDING PERMIT

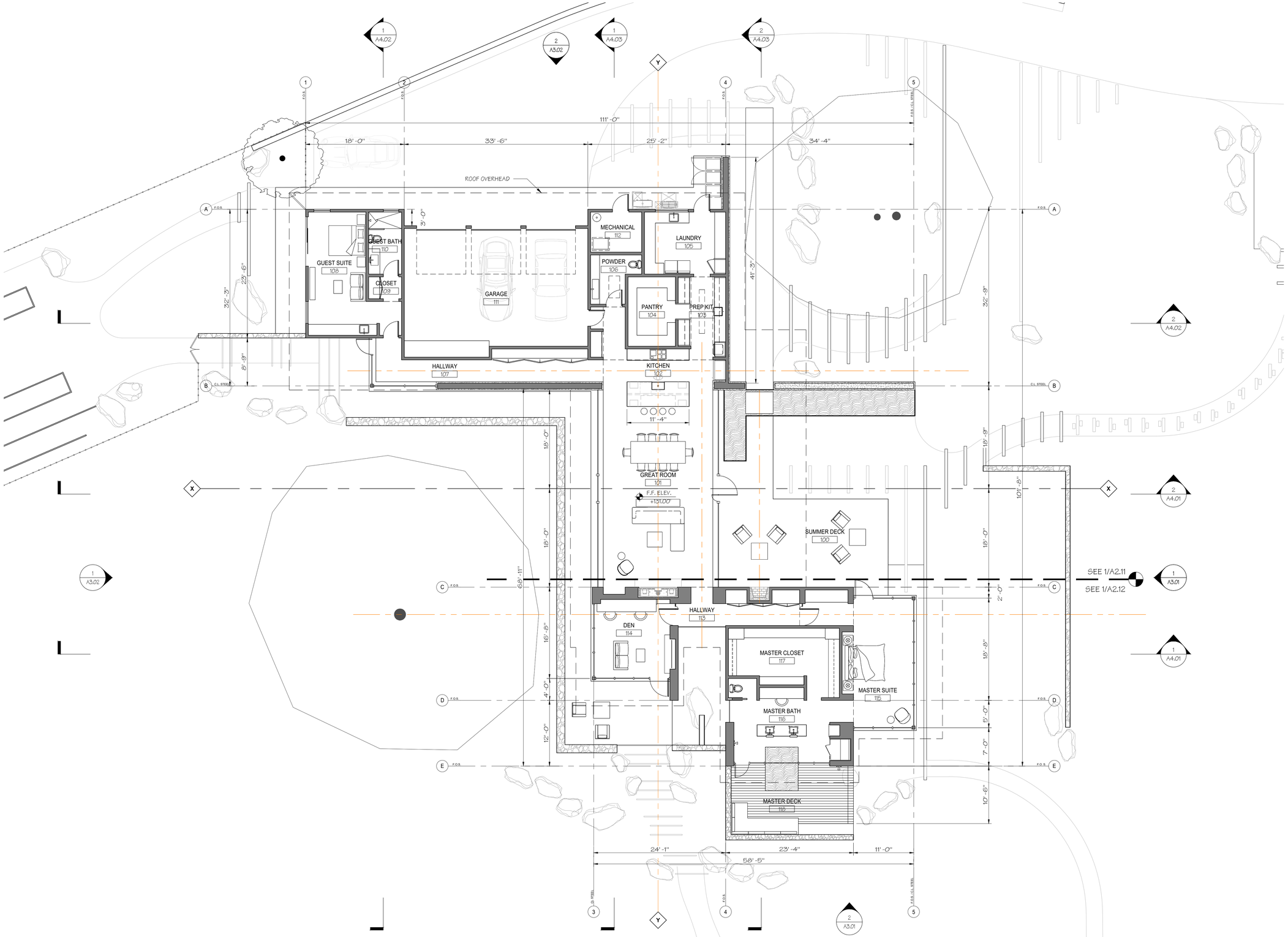

FLOOR PLAN 1
SCALE: 1/8" = 1'-0"

N TRUE NORTH

signum architecture

JUANCARLOS FERNANDEZ
PROJECT DESIGNER

SIGNUM ARCHITECTURE, LLP 707 963 8831
1675 2nd St, Napa, CA 94559

These drawings are the property of Signum Architecture and have been prepared specifically for this project. These drawings are not to be used for any other project, by any other entity or in another location.

CARMEL
SERWIN RESIDENCE

24 TEHAMA
CARMEL, CA 93923
APN 169-421-045

PROJECT NUMBER	2314
DATE	01/31/2025
CHECKED BY	JCF
DRAWN BY	AVH
SCALE	AS NOTED

REVISIONS

100% SCHEMATIC DESIGN	*08/07/2024*
DESIGN REVIEW STEP 4	*01/22/2025*
BUILDING PERMIT	*01/31/2025*

SHEET NAME

OVERALL
FLOOR PLAN

SHEET NUMBER

A1.02

BUILDING PERMIT

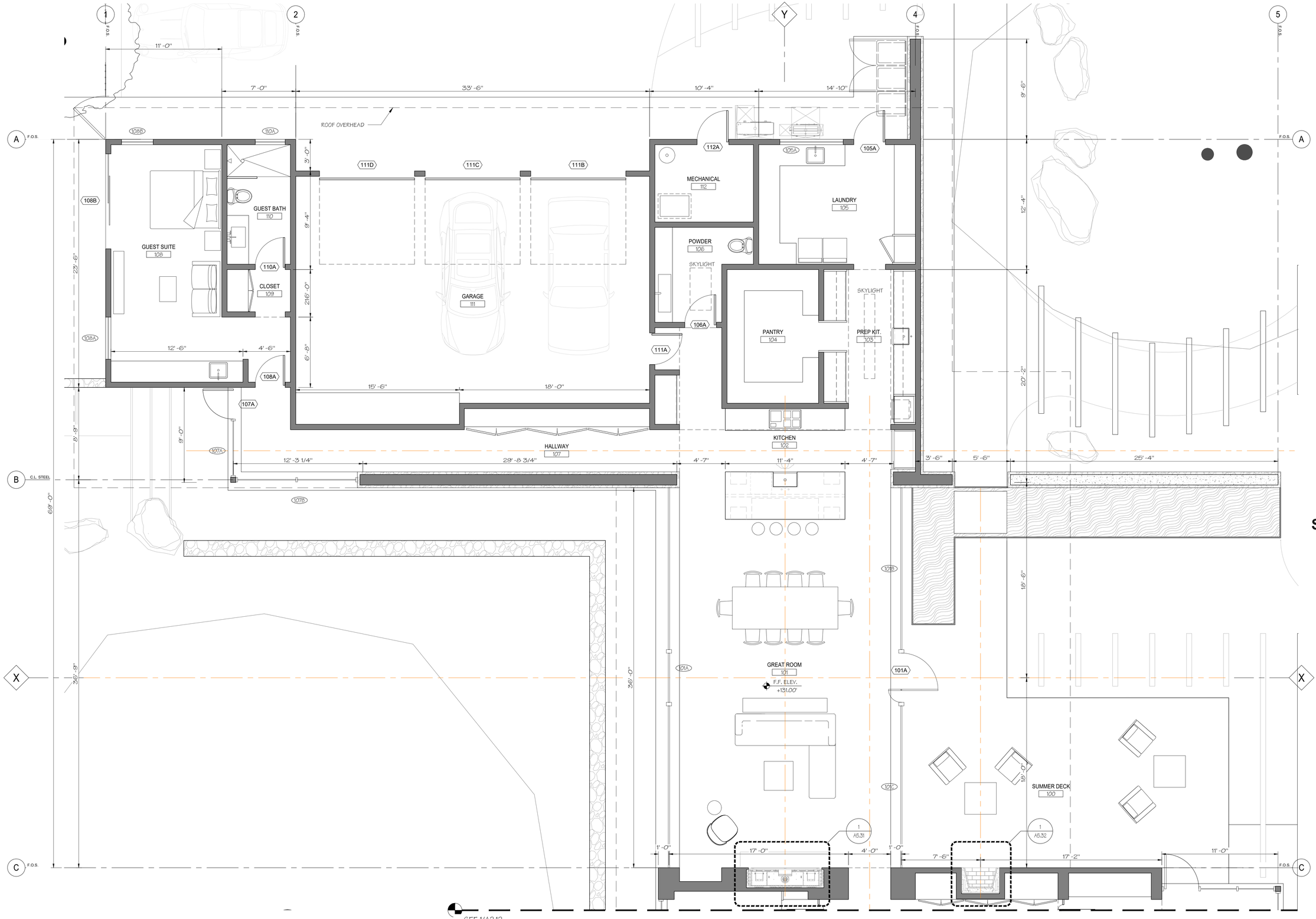

FLOOR PLAN
SCALE: 1/4" = 1'-0"

1

N
TRUE NORTH

signum architecture

JUANCARLOS FERNANDEZ
PROJECT DESIGNER

SIGNUM ARCHITECTURE, LLP 707 963 8831
1675 2nd St, Napa, CA 94559

These drawings are the property of Signum Architecture and have been prepared specifically for this project. These drawings are not to be used for any other project, by any other entity or in another location.

CARMEL SERWIN RESIDENCE

24 TEHAMA
CARMEL, CA 93923
APN 169-421-045

PROJECT NUMBER	2314
DATE	01/31/2025
CHECKED BY	JCF
DRAWN BY	AVH
SCALE	AS NOTED

REVISIONS

100% SCHEMATIC DESIGN	08/07/2024
DESIGN REVIEW STEP 4	01/22/2025
BUILDING PERMIT	01/31/2025

SHEET NAME

FLOOR PLAN
GREAT ROOM &
GUEST WING

SHEET NUMBER

A2.11

BUILDING PERMIT

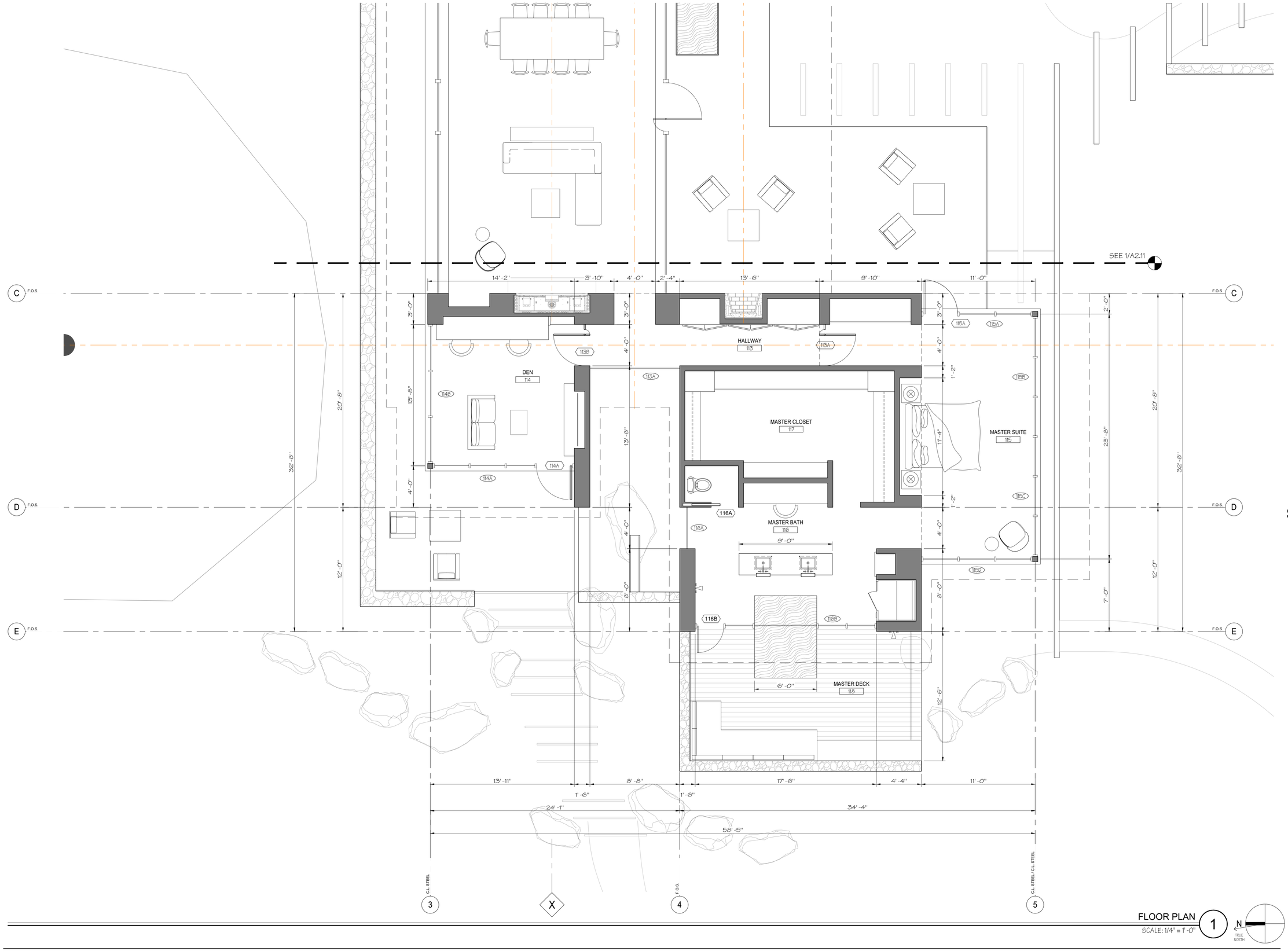

FLOOR PLAN 1
SCALE: 1/4" = 1'-0"

N TRUE NORTH

signum architecture

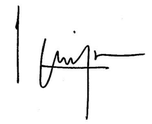

JUANCARLOS FERNANDEZ
PROJECT DESIGNER

SIGNUM ARCHITECTURE, LLP 707 963 8831
1675 2nd St, Napa, CA 94559

These drawings are the property of Signum Architecture and have been prepared specifically for this project. These drawings are not to be used for any other project, by any other entity or in another location.

CARMEL SERWIN RESIDENCE

24 TEHAMA
CARMEL, CA 93923
APN 169-421-045

PROJECT NUMBER	2314
DATE	01/31/2025
CHECKED BY	JCF
DRAWN BY	AVH
SCALE	AS NOTED

REVISIONS

100% SCHEMATIC DESIGN	08/07/2024
DESIGN REVIEW STEP 4	01/22/2025
BUILDING PERMIT	01/31/2025

SHEET NAME

FLOOR PLAN
MASTER WING

SHEET NUMBER

A2.12

BUILDING PERMIT

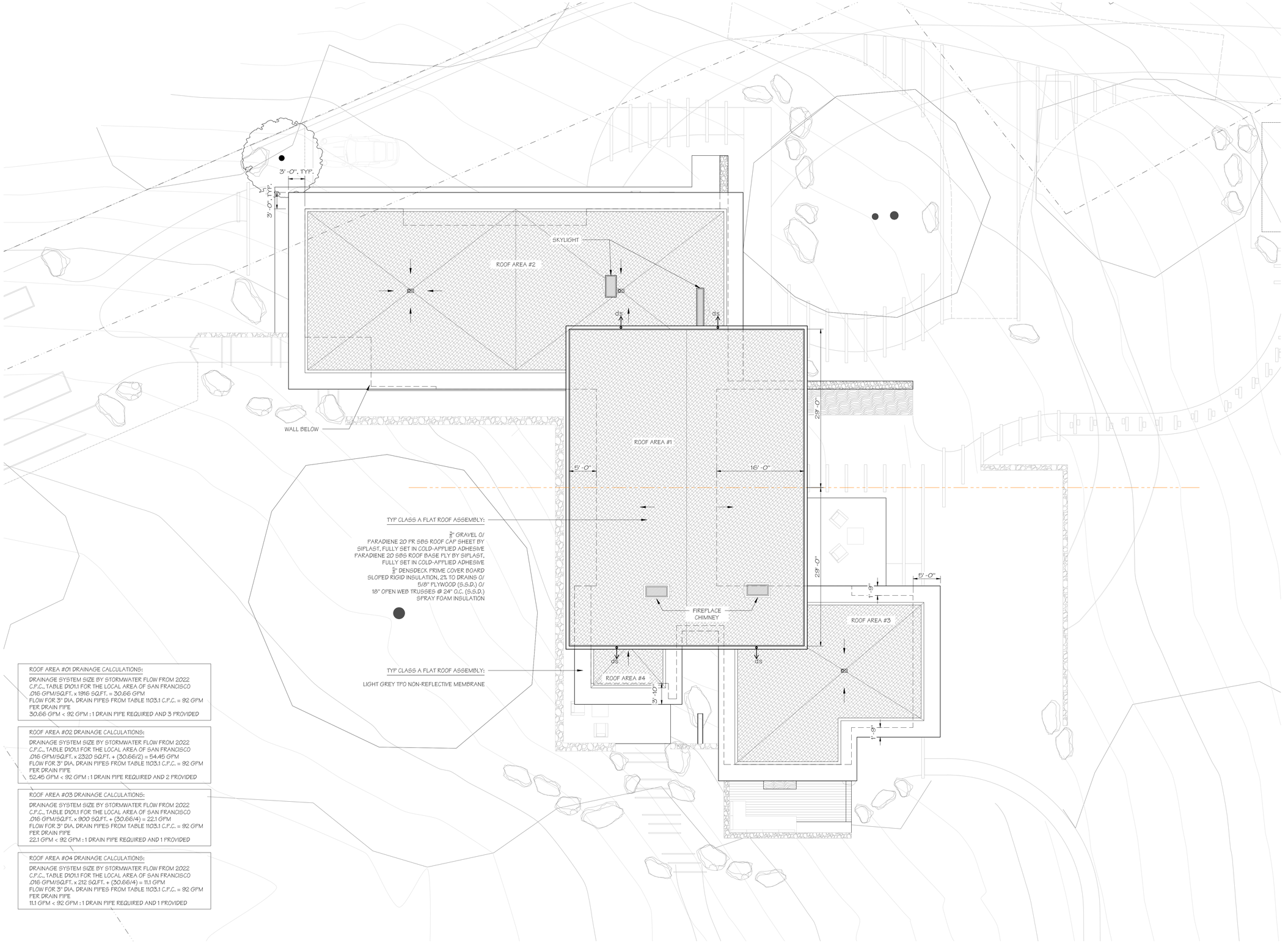

TYP CLASS A FLAT ROOF ASSEMBLY:

¾" GRAVEL O/
PARADIENE 20 PR SBS ROOF CAP SHEET BY SIPLAST, FULLY SET IN COLD-APPLIED ADHESIVE
PARADIENE 20 SBS ROOF BASE FLY BY SIPLAST, FULLY SET IN COLD-APPLIED ADHESIVE
½" DENSDECK PRIME COVER BOARD
SLOPED RIGID INSULATION, 2% TO DRAINS O/
5/8" PLYWOOD (S.S.D.) O/
18" OPEN WEB TRUSSES @ 24" O.C. (S.S.D.)
SPRAY FOAM INSULATION

TYP CLASS A FLAT ROOF ASSEMBLY:

LIGHT GREY TPO NON-REFLECTIVE MEMBRANE

ROOF AREA #01 DRAINAGE CALCULATIONS:

DRAINAGE SYSTEM SIZE BY STORMWATER FLOW FROM 2022 C.P.C., TABLE D101.1 FOR THE LOCAL AREA OF SAN FRANCISCO
.016 GPM/SQ.FT. x 1916 SQ.FT. = 30.66 GPM
FLOW FOR 3" DIA. DRAIN PIPES FROM TABLE 1103.1 C.P.C. = 92 GPM PER DRAIN PIPE
30.66 GPM < 92 GPM : 1 DRAIN PIPE REQUIRED AND 3 PROVIDED

ROOF AREA #02 DRAINAGE CALCULATIONS:

DRAINAGE SYSTEM SIZE BY STORMWATER FLOW FROM 2022 C.P.C., TABLE D101.1 FOR THE LOCAL AREA OF SAN FRANCISCO
.016 GPM/SQ.FT. x 2320 SQ.FT. + (30.66/2) = 54.45 GPM
FLOW FOR 3" DIA. DRAIN PIPES FROM TABLE 1103.1 C.P.C. = 92 GPM PER DRAIN PIPE
52.45 GPM < 92 GPM : 1 DRAIN PIPE REQUIRED AND 2 PROVIDED

ROOF AREA #03 DRAINAGE CALCULATIONS:

DRAINAGE SYSTEM SIZE BY STORMWATER FLOW FROM 2022 C.P.C., TABLE D101.1 FOR THE LOCAL AREA OF SAN FRANCISCO
.016 GPM/SQ.FT. x 900 SQ.FT. + (30.66/4) = 22.1 GPM
FLOW FOR 3" DIA. DRAIN PIPES FROM TABLE 1103.1 C.P.C. = 92 GPM PER DRAIN PIPE
22.1 GPM < 92 GPM : 1 DRAIN PIPE REQUIRED AND 1 PROVIDED

ROOF AREA #04 DRAINAGE CALCULATIONS:

DRAINAGE SYSTEM SIZE BY STORMWATER FLOW FROM 2022 C.P.C., TABLE D101.1 FOR THE LOCAL AREA OF SAN FRANCISCO
.016 GPM/SQ.FT. x 212 SQ.FT. + (30.66/4) = 11.1 GPM
FLOW FOR 3" DIA. DRAIN PIPES FROM TABLE 1103.1 C.P.C. = 92 GPM PER DRAIN PIPE
11.1 GPM < 92 GPM : 1 DRAIN PIPE REQUIRED AND 1 PROVIDED

ROOF PLAN 1
SCALE: 1/8" = 1'-0"

signum architecture

JUANCARLOS FERNANDEZ
PROJECT DESIGNER

SIGNUM ARCHITECTURE, LLP 707 963 8831
1675 2nd St, Napa, CA 94559

These drawings are the property of Signum Architecture and have been prepared specifically for this project. These drawings are not to be used for any other project, by any other entity or in another location.

CARMEL
SERWIN RESIDENCE

24 TEHAMA
CARMEL, CA 93923
APN 169-421-045

PROJECT NUMBER	2314
DATE	01/31/2025
CHECKED BY	JCF
DRAWN BY	AVH
SCALE	AS NOTED

REVISIONS

100% SCHEMATIC DESIGN	08/07/2024
DESIGN REVIEW STEP 4	01/22/2025
BUILDING PERMIT	01/31/2025

SHEET NAME

ROOF PLAN

SHEET NUMBER

A2.21

BUILDING PERMIT

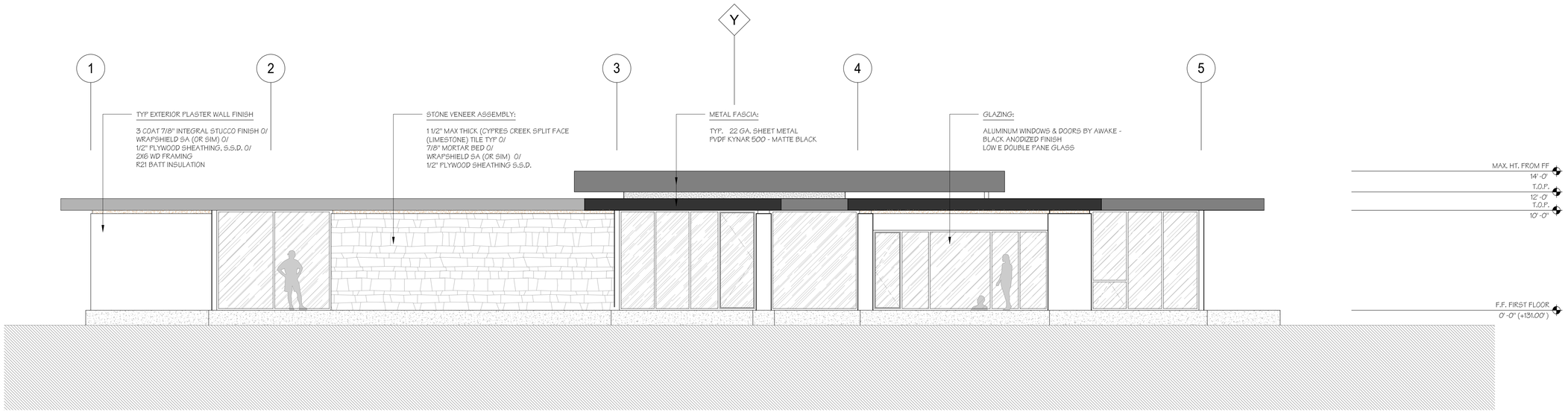

ELEVATION - WEST 2

SCALE: 3/16" = 1'-0"

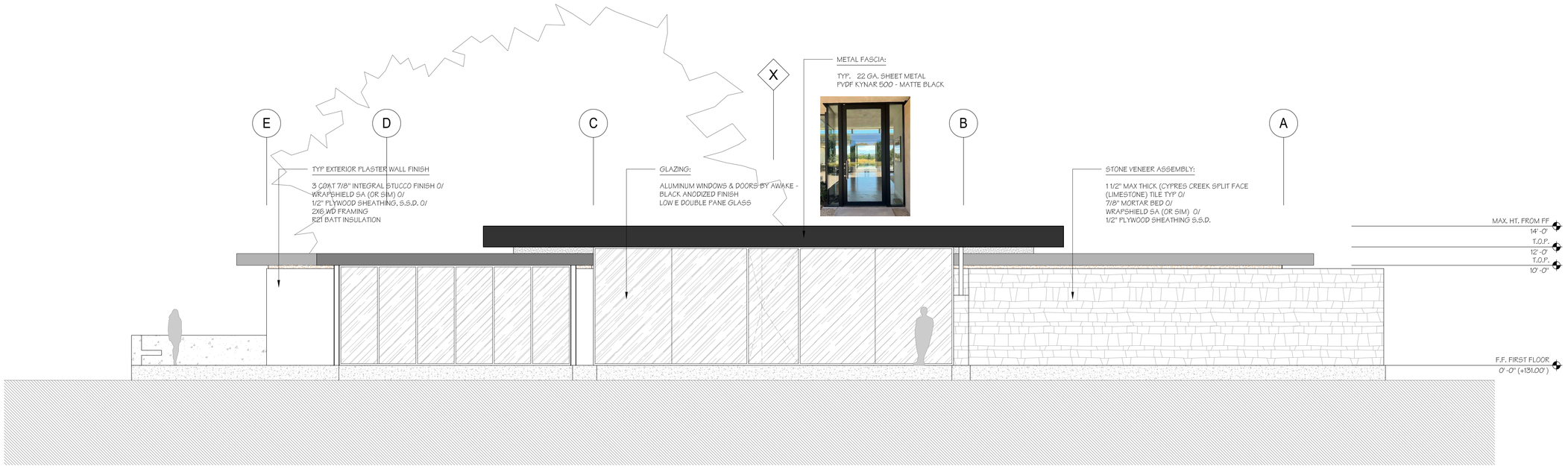

ELEVATION - SOUTH 1

SCALE: 3/16" = 1'-0"

signum architecture

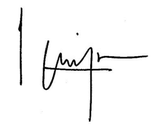

JUANCARLOS FERNANDEZ
PROJECT DESIGNER

SIGNUM ARCHITECTURE, LLP 707 963 8831
1675 2nd St, Napa, CA 94559

These drawings are the property of Signum Architecture and have been prepared specifically for this project. These drawings are not to be used for any other project, by any other entity or in another location.

CARMEL
SERWIN RESIDENCE

24 TEHAMA
CARMEL, CA 93923
APN 169-421-045

PROJECT NUMBER	2314
DATE	01/31/2025
CHECKED BY	JCF
DRAWN BY	AVH
SCALE	AS NOTED

REVISIONS

100% SCHEMATIC DESIGN	08/07/2024
DESIGN REVIEW STEP 4	01/22/2025
BUILDING PERMIT	01/31/2025

SHEET NAME

ELEVATIONS

SHEET NUMBER

A3.01

BUILDING PERMIT

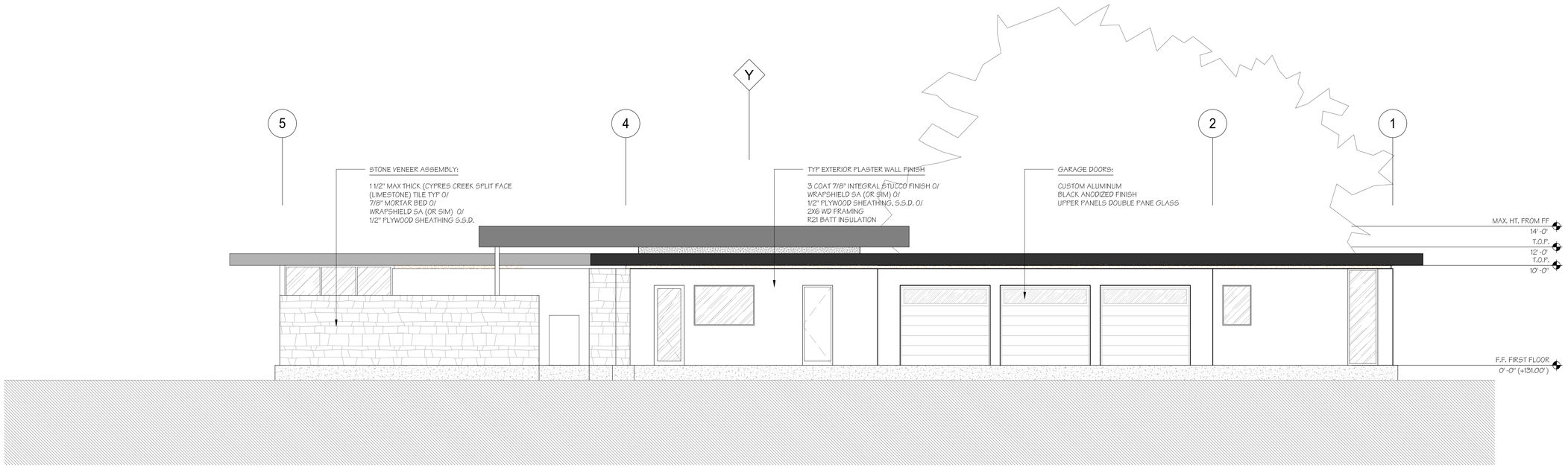

ELEVATION - EAST

SCALE: 3/16" = 1'-0"

2

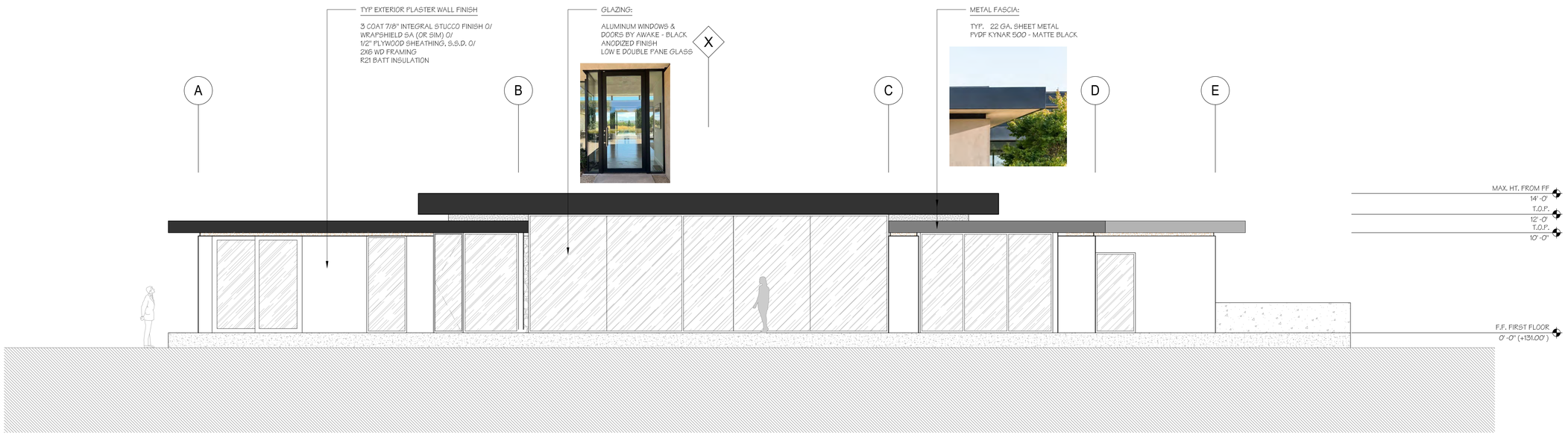

ELEVATION - NORTH

SCALE: 3/16" = 1'-0"

1

signum architecture

JUANCARLOS FERNANDEZ
PROJECT DESIGNER

SIGNUM ARCHITECTURE, LLP 707 963 8831
1675 2nd St, Napa, CA 94559

These drawings are the property of Signum Architecture and have been prepared specifically for this project. These drawings are not to be used for any other project, by any other entity or in another location.

CARMEL
SERWIN RESIDENCE

24 TEHAMA
CARMEL, CA 93923
APN 169-421-045

PROJECT NUMBER	2314
DATE	01/31/2025
CHECKED BY	JCF
DRAWN BY	AVH
SCALE	AS NOTED

REVISIONS

100% SCHEMATIC DESIGN	08/07/2024
DESIGN REVIEW STEP 4	01/22/2025
BUILDING PERMIT	01/31/2025

SHEET NAME

ELEVATIONS

SHEET NUMBER

A3.02

BUILDING PERMIT

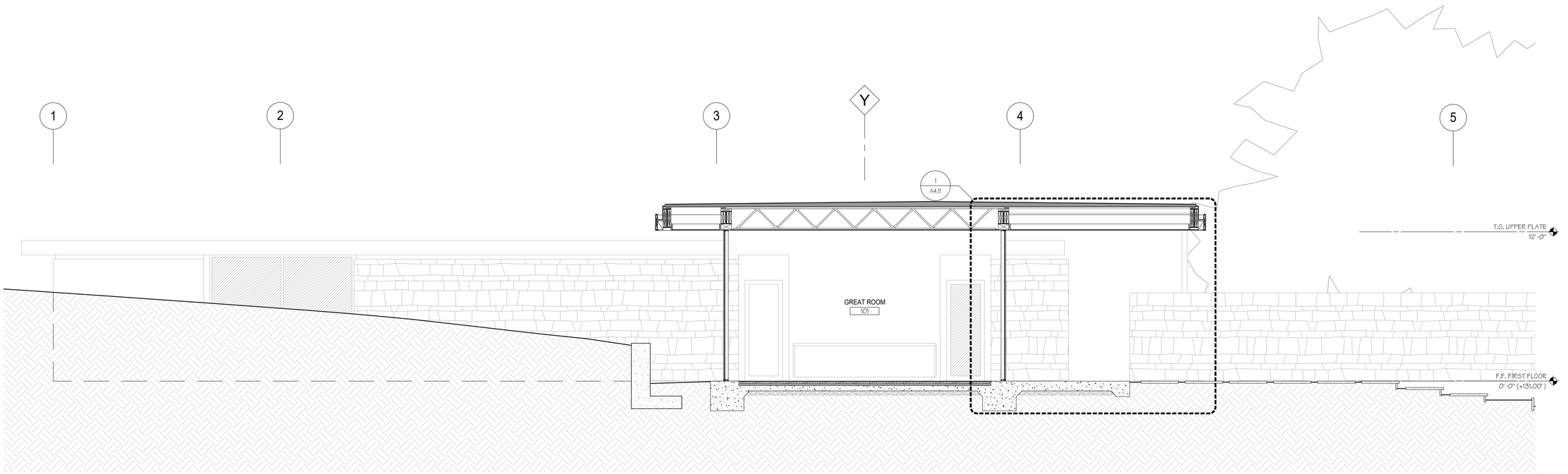

BUILDING SECTION 2

SCALE: 1/4" = 1'-0"

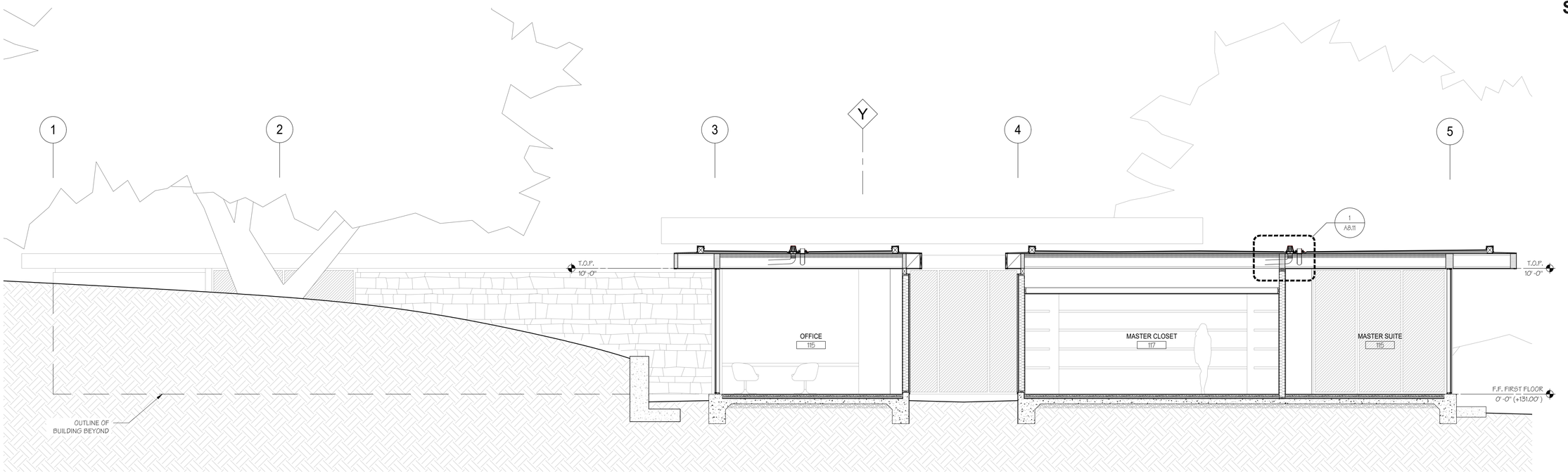

BUILDING SECTION 1

SCALE: 1/4" = 1'-0"

signum architecture

JUANCARLOS FERNANDEZ
PROJECT DESIGNER

SIGNUM ARCHITECTURE, LLP 707 963 8831
1675 2nd St, Napa, CA 94559

These drawings are the property of Signum Architecture and have been prepared specifically for this project. These drawings are not to be used for any other project, by any other entity or in another location.

CARMEL
SERWIN RESIDENCE

24 TEHAMA
CARMEL, CA 93923
APN 169-421-045

PROJECT NUMBER	2314
DATE	01/31/2025
CHECKED BY	JCF
DRAWN BY	AVH
SCALE	AS NOTED

REVISIONS

100% SCHEMATIC DESIGN	08/07/2024
DESIGN REVIEW STEP 4	01/22/2025
BUILDING PERMIT	01/31/2025

SHEET NAME

BUILDING SECTIONS

SHEET NUMBER

A4.01

BUILDING PERMIT

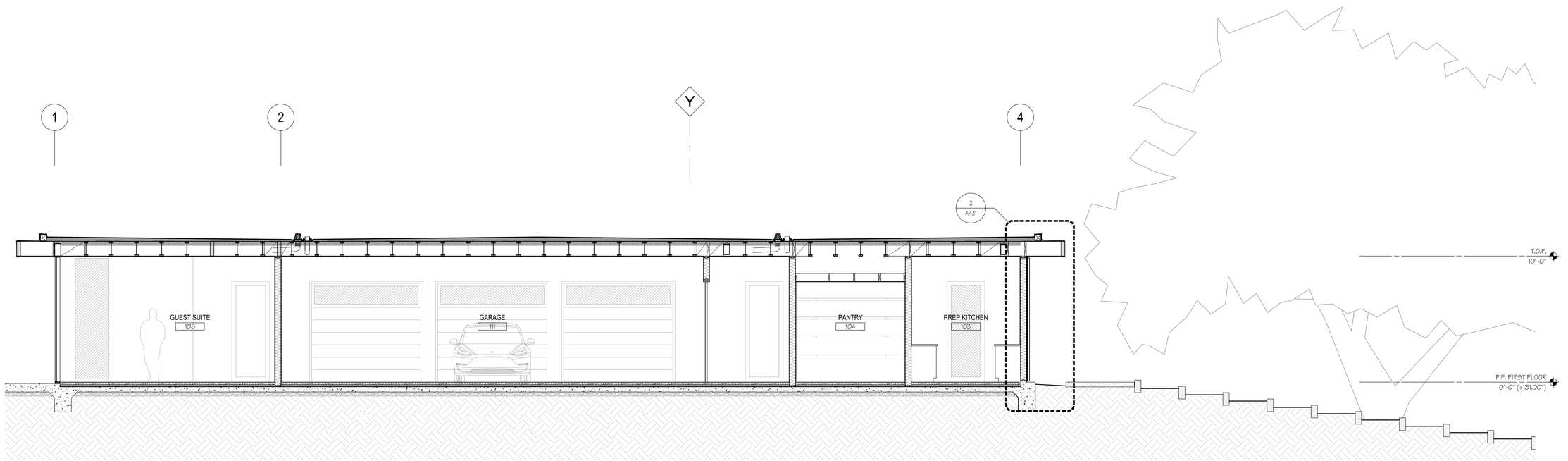

BUILDING SECTION 2

SCALE: 1/4" = 1'-0"

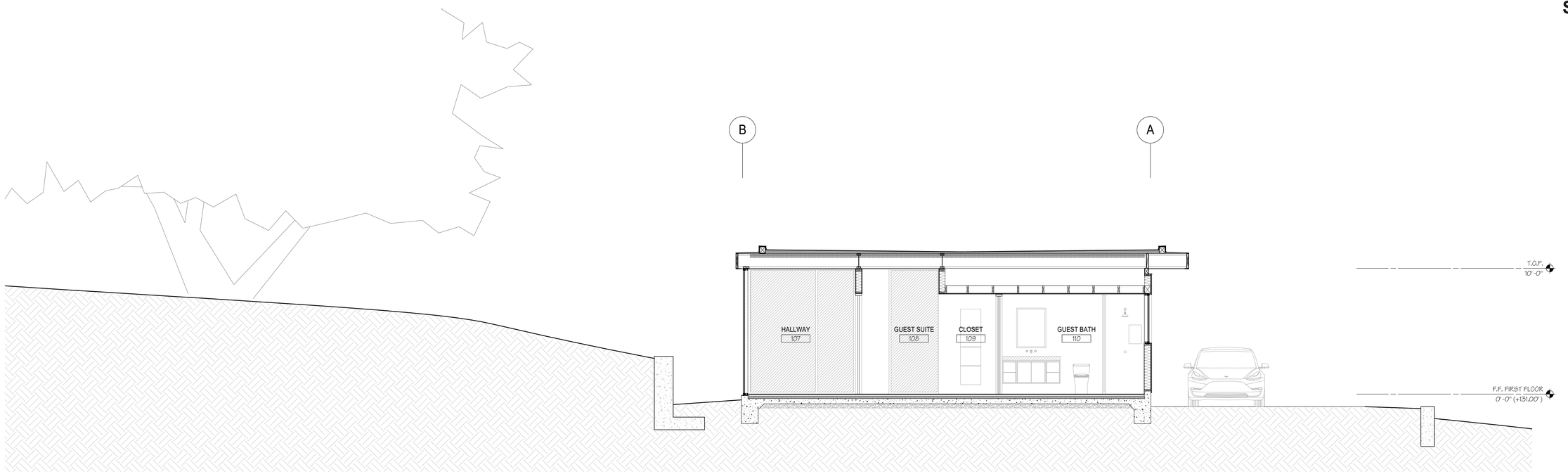

BUILDING SECTION 1

SCALE: 1/4" = 1'-0"

signum architecture

JUANCARLOS FERNANDEZ
PROJECT DESIGNER

SIGNUM ARCHITECTURE, LLP 707 963 8831
1675 2nd St, Napa, CA 94559

These drawings are the property of Signum Architecture and have been prepared specifically for this project. These drawings are not to be used for any other project, by any other entity or in another location.

CARMEL
SERWIN RESIDENCE

24 TEHAMA
CARMEL, CA 93923
APN 169-421-045

PROJECT NUMBER	2314
DATE	01/31/2025
CHECKED BY	JCF
DRAWN BY	AVH
SCALE	AS NOTED

REVISIONS

100% SCHEMATIC DESIGN	08/07/2024
DESIGN REVIEW STEP 4	01/22/2025
BUILDING PERMIT	01/31/2025

SHEET NAME

BUILDING SECTIONS

SHEET NUMBER

A4.02

BUILDING PERMIT

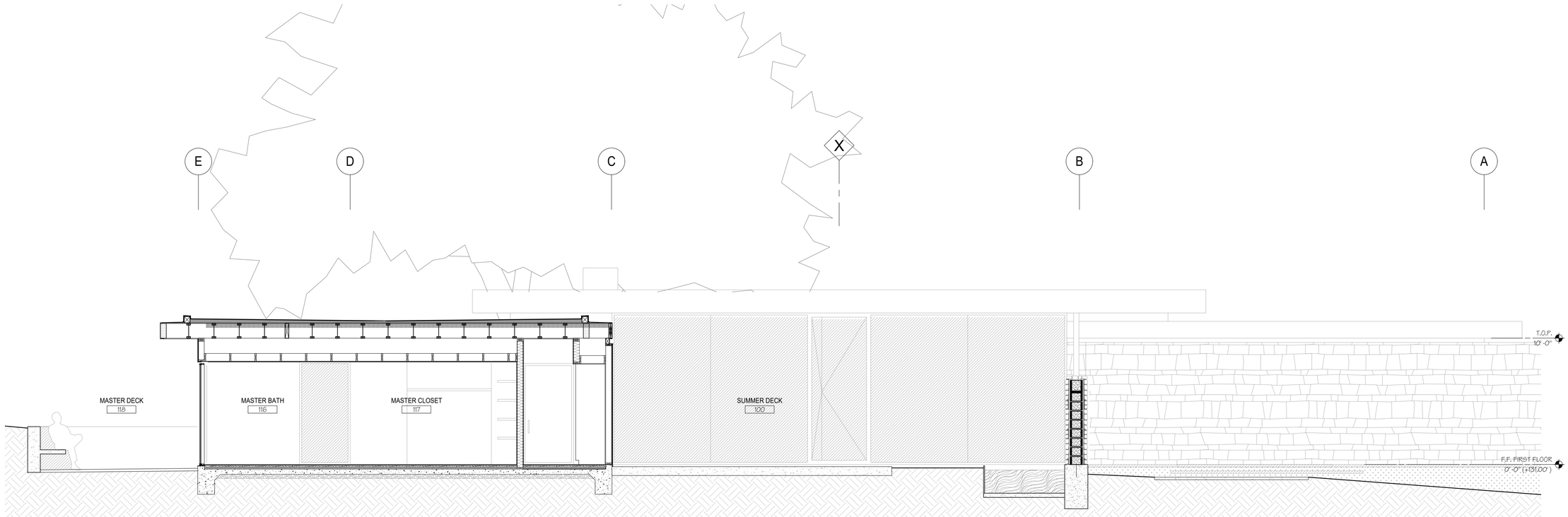

BUILDING SECTION 2

SCALE: 1/4" = 1'-0"

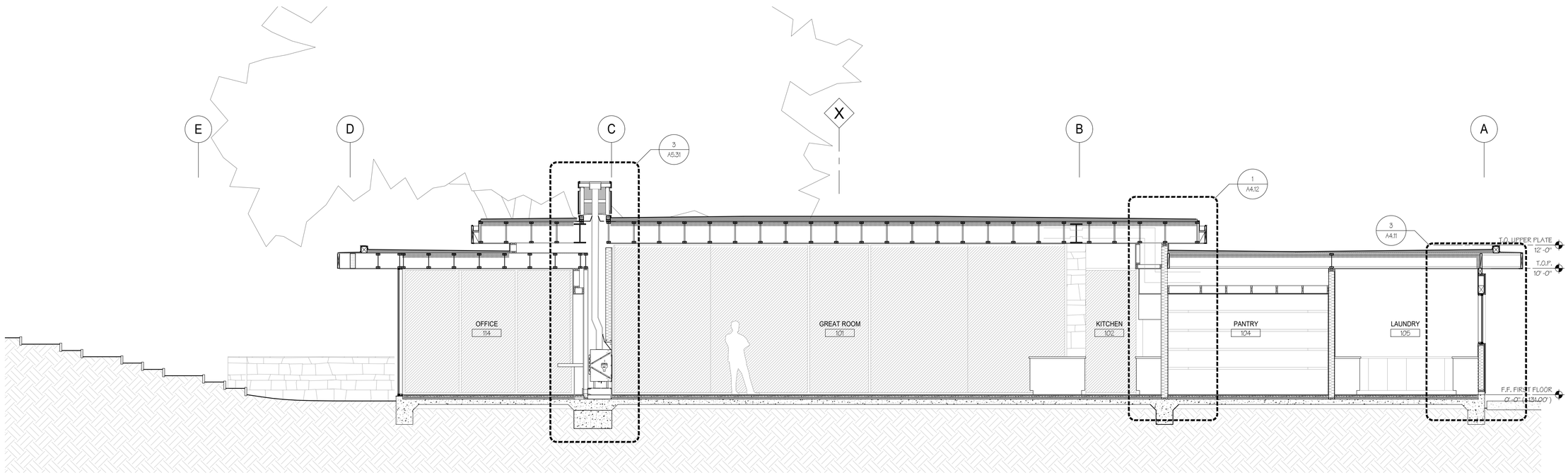

BUILDING SECTION 1

SCALE: 1/4" = 1'-0"

signum architecture

JUANCARLOS FERNANDEZ
PROJECT DESIGNER

SIGNUM ARCHITECTURE, LLP 707 963 8831
1675 2nd St, Napa, CA 94559

These drawings are the property of Signum Architecture and have been prepared specifically for this project. These drawings are not to be used for any other project, by any other entity or in another location.

CARMEL
SERWIN RESIDENCE

24 TEHAMA
CARMEL, CA 93923
APN 169-421-045

PROJECT NUMBER	2314
DATE	01/31/2025
CHECKED BY	JCF
DRAWN BY	AVH
SCALE	AS NOTED

REVISIONS

100% SCHEMATIC DESIGN	08/07/2024
DESIGN REVIEW STEP 4	01/22/2025
BUILDING PERMIT	01/31/2025

SHEET NAME

BUILDING SECTIONS

SHEET NUMBER

A4.03

BUILDING PERMIT

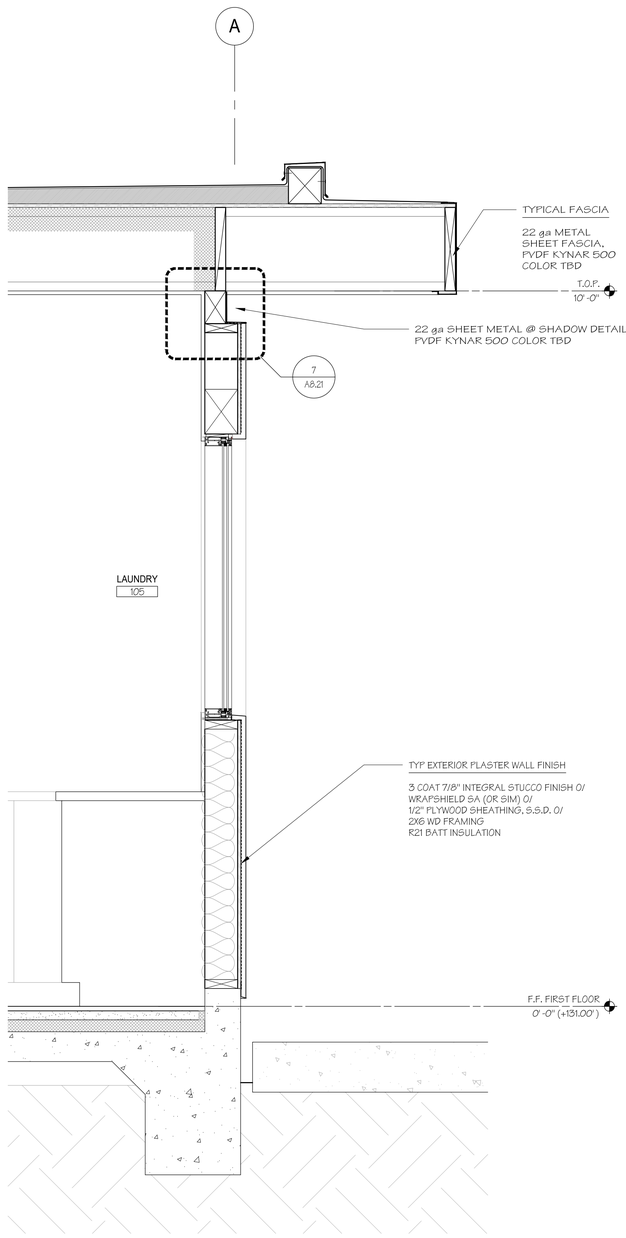

WALL SECTION 3
SCALE: 1" = 1'-0"

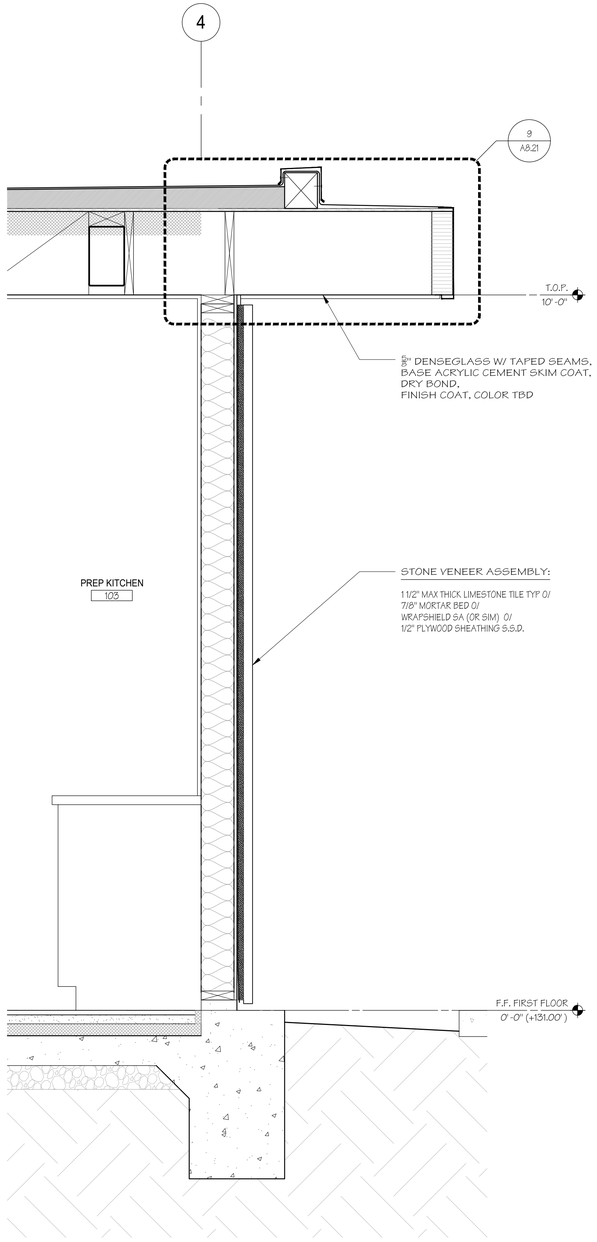

WALL SECTION 2
SCALE: 1" = 1'-0"

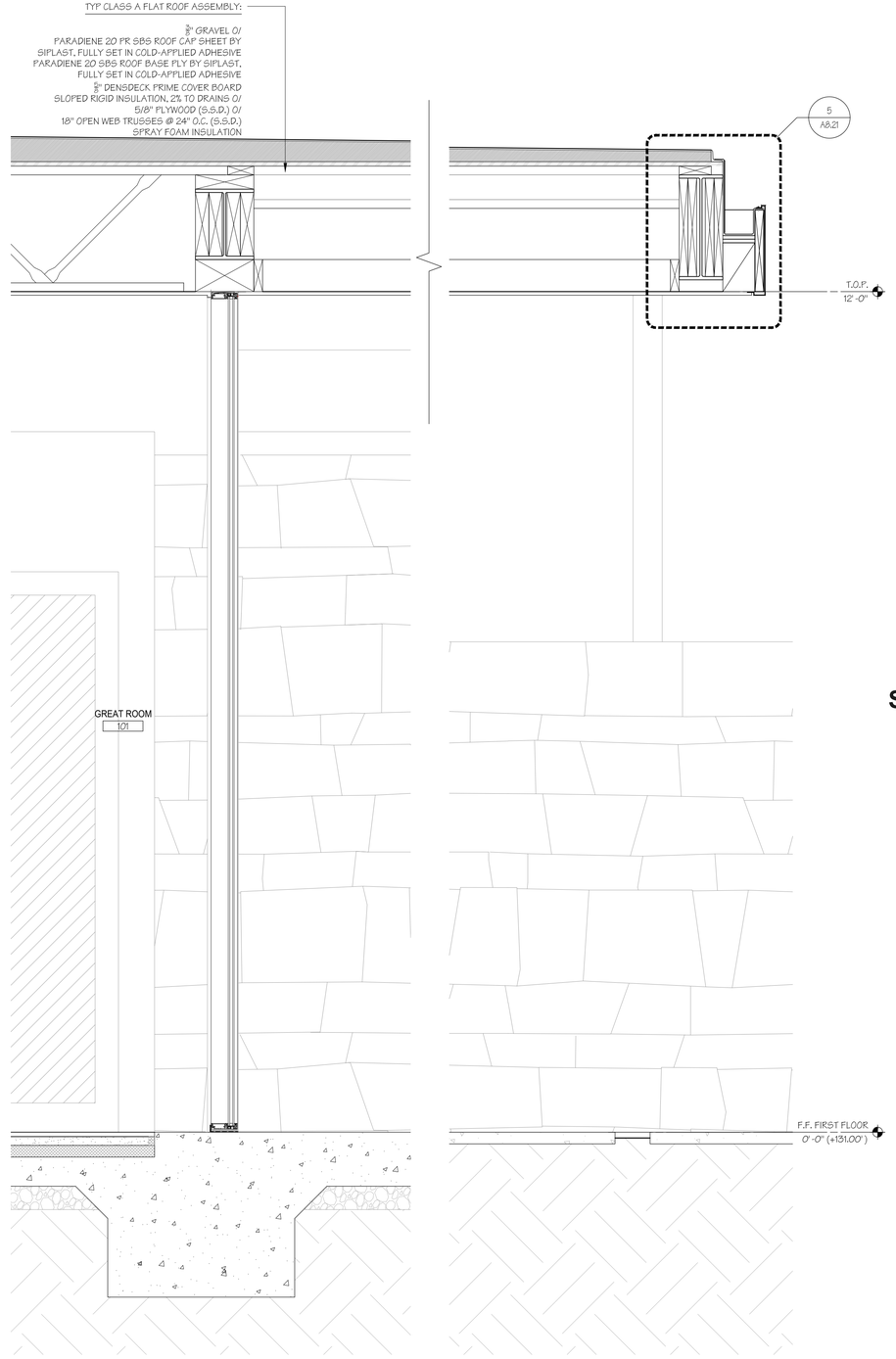

WALL SECTION 1
SCALE: 1" = 1'-0"

signum architecture

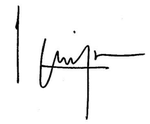

JUANCARLOS FERNANDEZ
PROJECT DESIGNER

SIGNUM ARCHITECTURE, LLP 707 963 8831
1675 2nd St, Napa, CA 94559

These drawings are the property of Signum Architecture and have been prepared specifically for this project. These drawings are not to be used for any other project, by any other entity or in another location.

CARMEL
SERWIN RESIDENCE

24 TEHAMA
CARMEL, CA 93923
APN 169-421-045

PROJECT NUMBER	2314
DATE	01/31/2025
CHECKED BY	JCF
DRAWN BY	AVH
SCALE	AS NOTED

REVISIONS

100% SCHEMATIC DESIGN	08/07/2024
DESIGN REVIEW STEP 4	01/22/2025
BUILDING PERMIT	01/31/2025

SHEET NAME

WALL SECTIONS

SHEET NUMBER

A4.11

BUILDING PERMIT

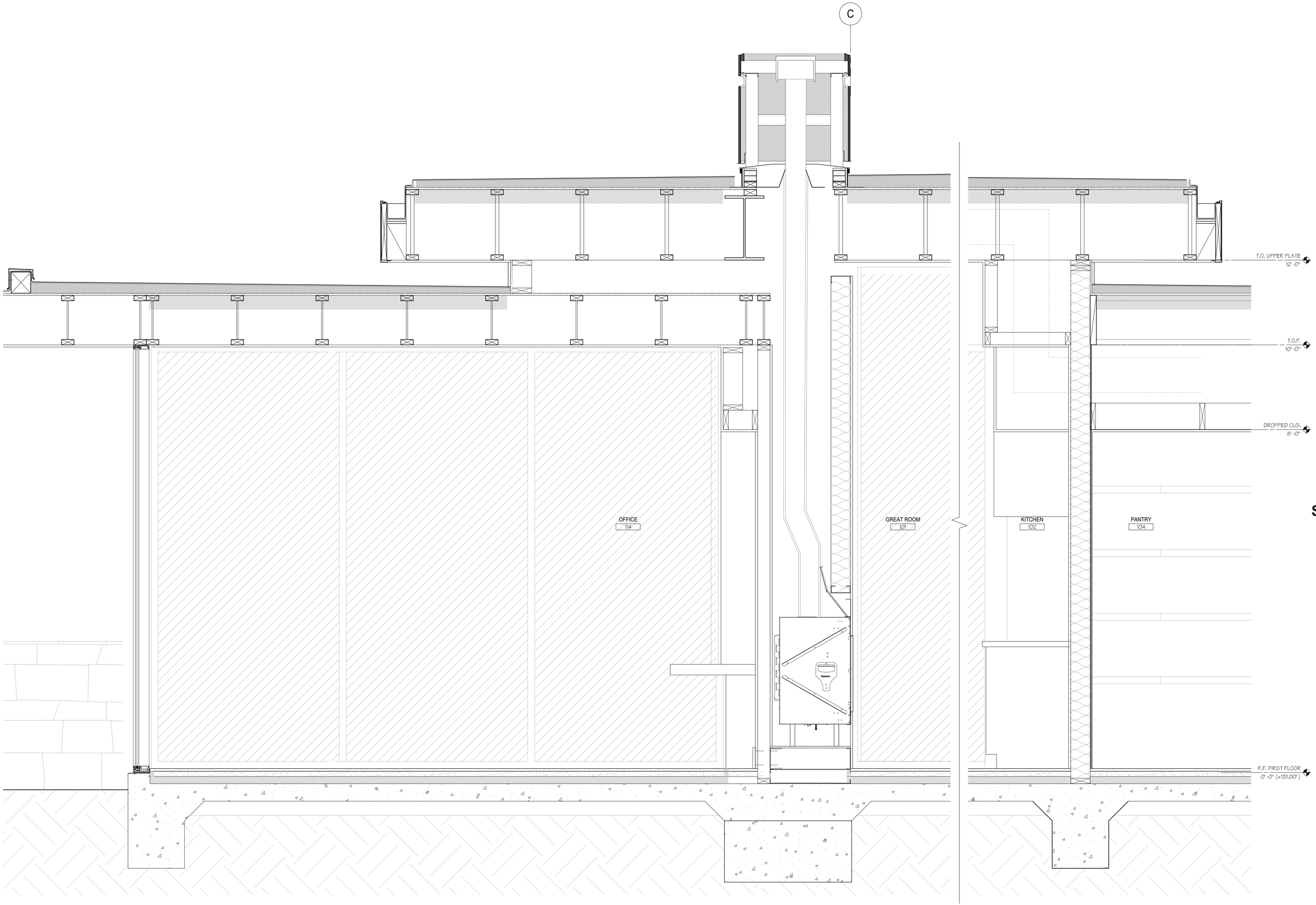

WALL SECTION 2
SCALE: 1" = 1'-0"

WALL SECTION 1
SCALE: 1" = 1'-0"

signum architecture

JUANCARLOS FERNANDEZ
PROJECT DESIGNER

SIGNUM ARCHITECTURE, LLP 707 963 8831
1675 2nd St, Napa, CA 94559

These drawings are the property of Signum Architecture and have been prepared specifically for this project. These drawings are not to be used for any other project, by any other entity or in another location.

CARMEL
SERWIN RESIDENCE

24 TEHAMA
CARMEL, CA 93923
APN 169-421-045

PROJECT NUMBER	2314
DATE	01/31/2025
CHECKED BY	JCF
DRAWN BY	AVH
SCALE	AS NOTED

REVISIONS

100% SCHEMATIC DESIGN	08/07/2024
DESIGN REVIEW STEP 4	01/22/2025
BUILDING PERMIT	01/31/2025

SHEET NAME

WALL SECTIONS

SHEET NUMBER

A4.12

BUILDING PERMIT

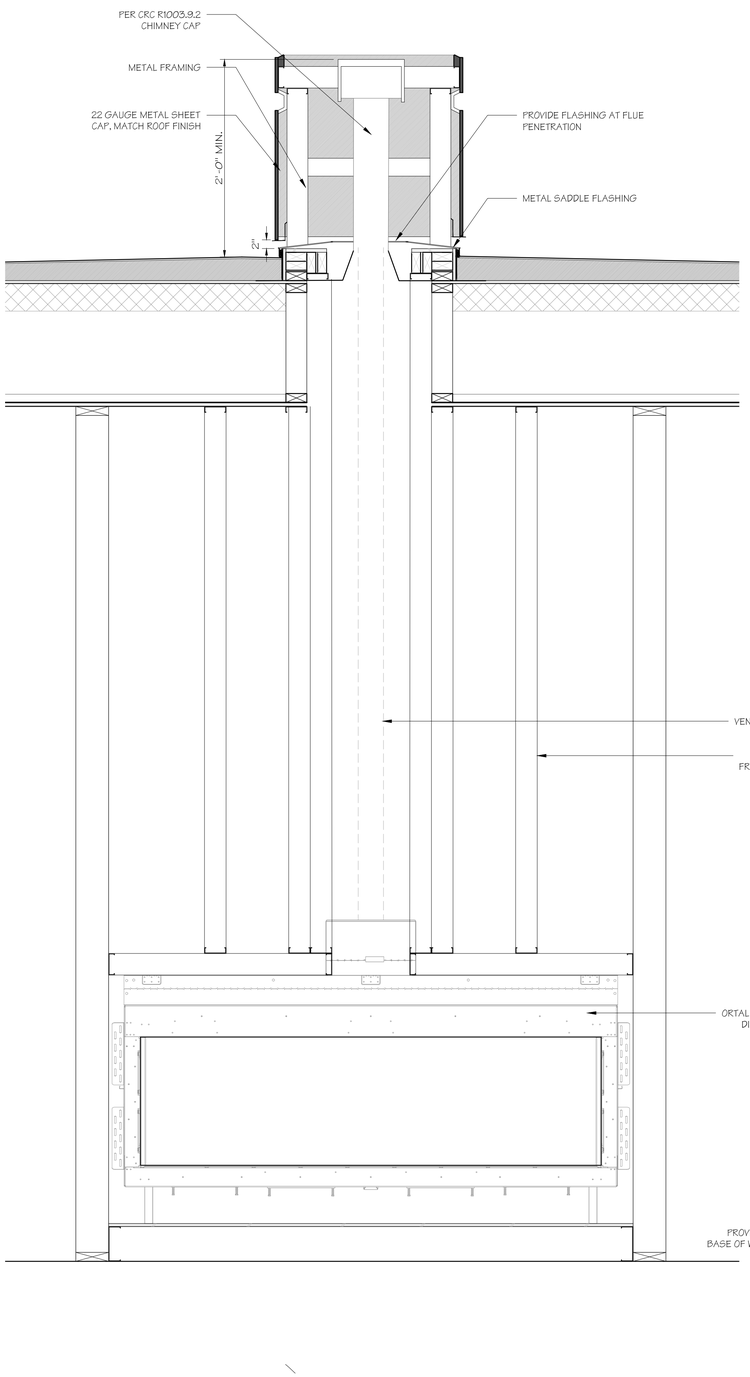

FRONT SECTION 4

SCALE: 1" = 1'-0"

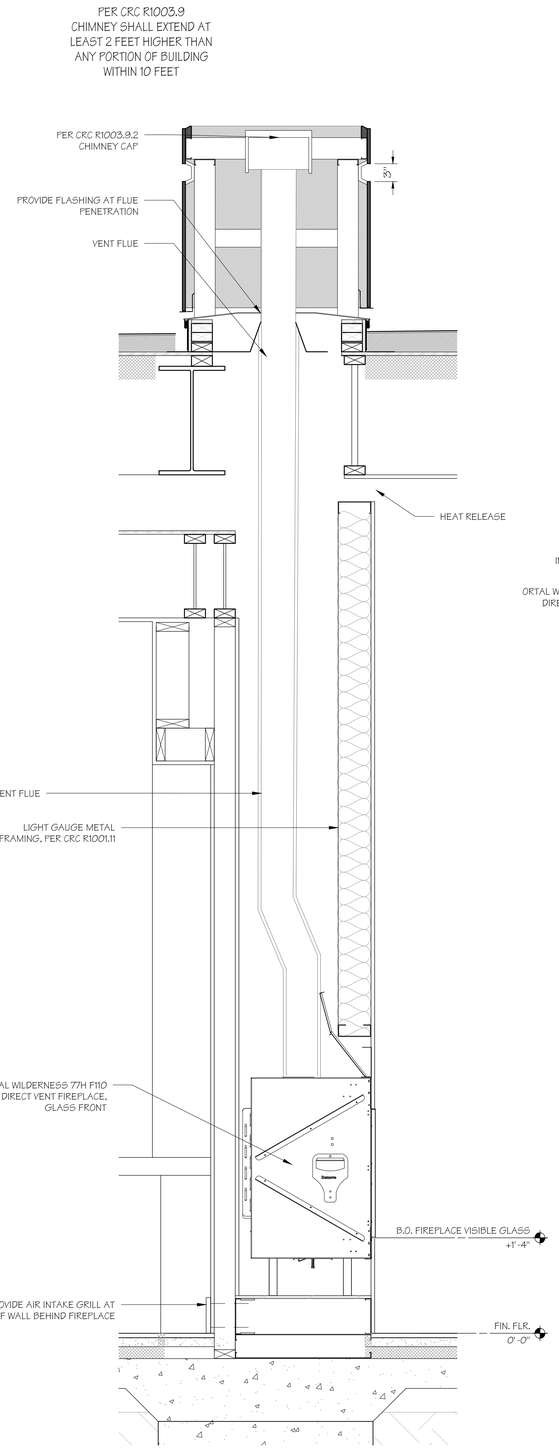

CROSS SECTION 3

SCALE: 1" = 1'-0"

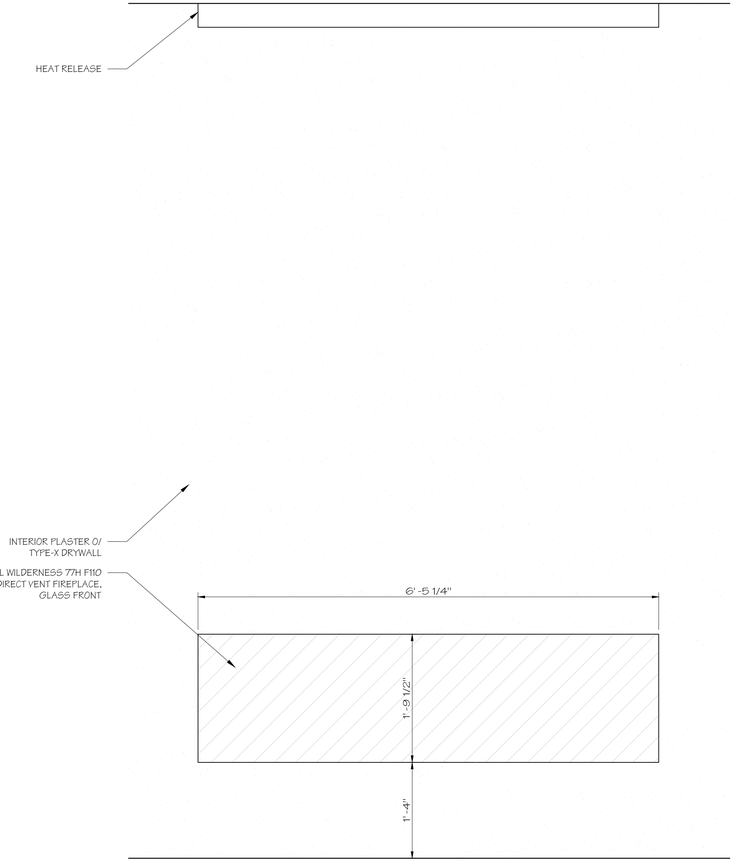

INTERIOR ELEVATION 2

SCALE: 1" = 1'-0"

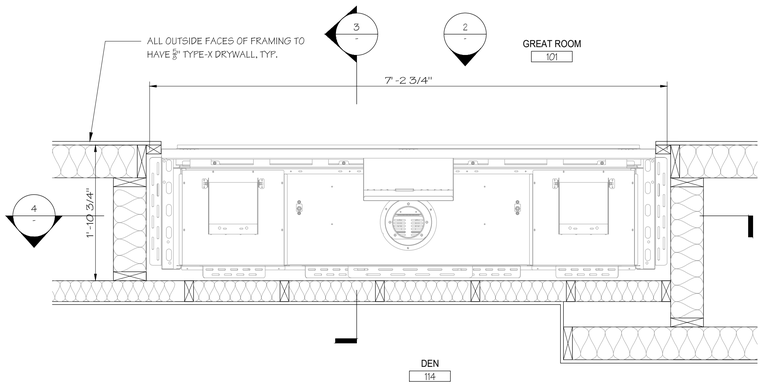

WALL SECTION 1

SCALE: 1" = 1'-0"

signum architecture

JUANCARLOS FERNANDEZ
PROJECT DESIGNER

SIGNUM ARCHITECTURE, LLP 707 963 8831
1675 2nd St, Napa, CA 94559

These drawings are the property of Signum Architecture and have been prepared specifically for this project. These drawings are not to be used for any other project, by any other entity or in another location.

CARMEL
SERWIN RESIDENCE

24 TEHAMA
CARMEL, CA 93923
APN 169-421-045

PROJECT NUMBER	2314
DATE	01/31/2025
CHECKED BY	JCF
DRAWN BY	AVH
SCALE	AS NOTED

REVISIONS

100% SCHEMATIC DESIGN	08/07/2024
DESIGN REVIEW STEP 4	01/22/2025
BUILDING PERMIT	01/31/2025

SHEET NAME

FIREPLACE DETAILS - LIVING ROOM

SHEET NUMBER

A5.31

BUILDING PERMIT

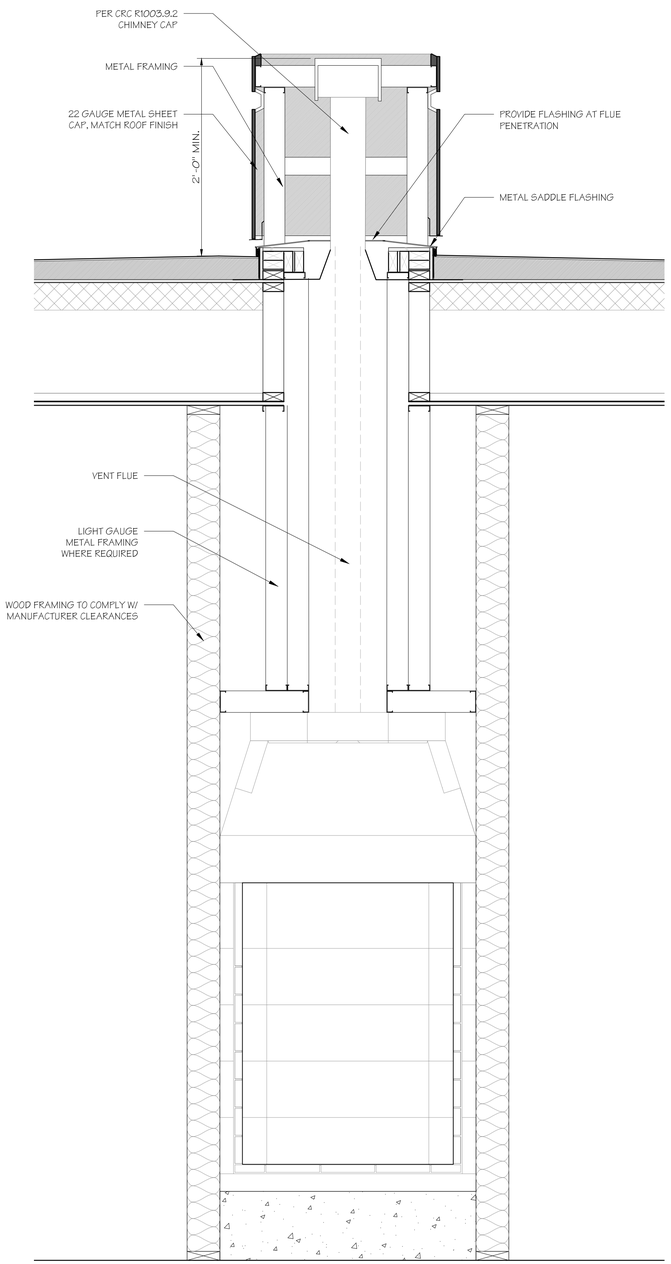

FRONT SECTION 4
SCALE: 1" = 1'-0"

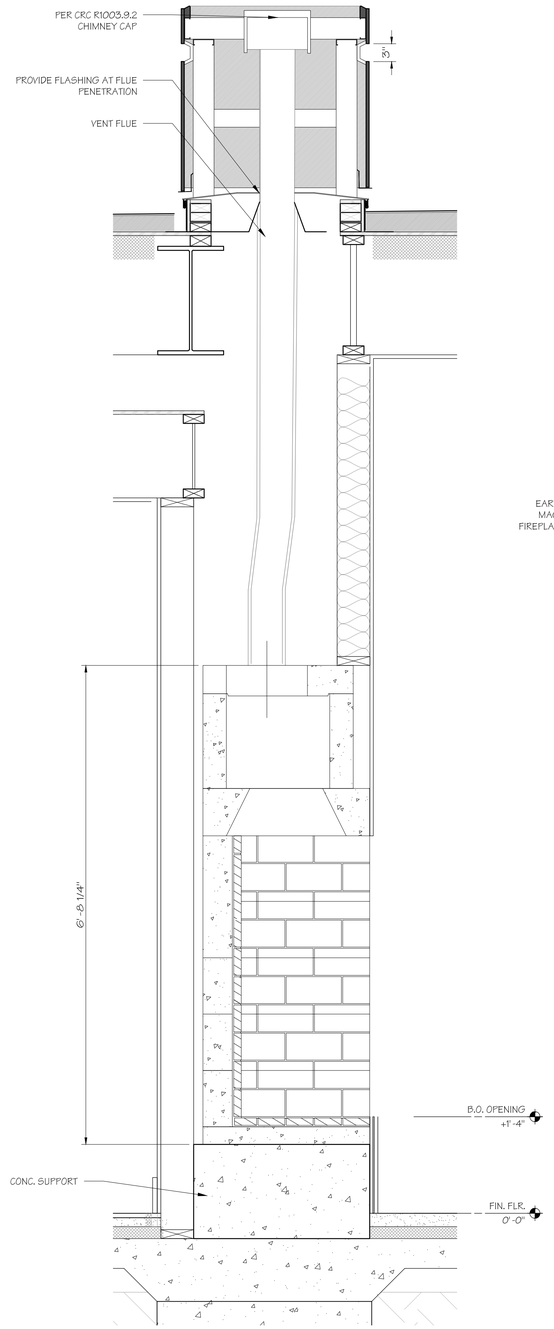

CROSS SECTION 3
SCALE: 1" = 1'-0"

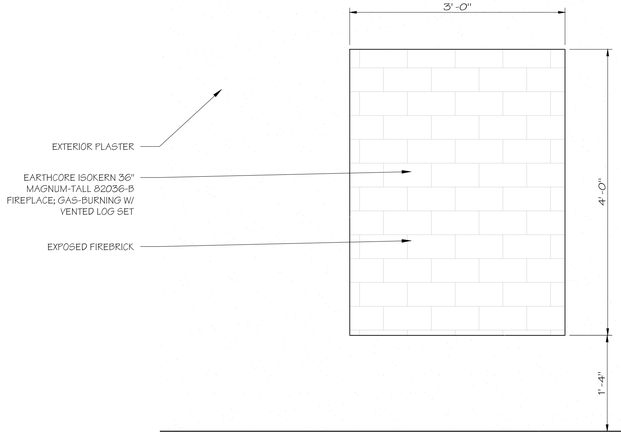

INTERIOR ELEVATION 2
SCALE: 1" = 1'-0"

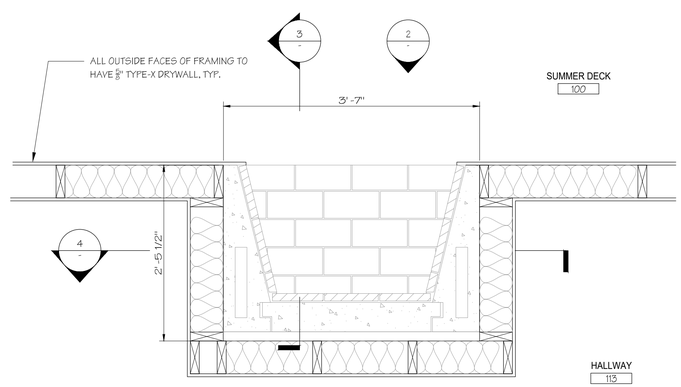

WALL SECTION 1
SCALE: 1" = 1'-0"

signum architecture

JUANCARLOS FERNANDEZ
PROJECT DESIGNER

SIGNUM ARCHITECTURE, LLP 707 963 8831
1675 2nd St, Napa, CA 94559

These drawings are the property of Signum Architecture and have been prepared specifically for this project. These drawings are not to be used for any other project, by any other entity or in another location.

CARMEL
SERWIN RESIDENCE

24 TEHAMA
CARMEL, CA 93923
APN 169-421-045

PROJECT NUMBER	2314
DATE	01/31/2025
CHECKED BY	JCF
DRAWN BY	AVH
SCALE	AS NOTED

REVISIONS

100% SCHEMATIC DESIGN	08/07/2024
DESIGN REVIEW STEP 4	01/22/2025
BUILDING PERMIT	01/31/2025

SHEET NAME

FIREPLACE DETAILS
- OUTDOOR PATIO

SHEET NUMBER

A5.32

BUILDING PERMIT

The following diagrams are examples of potential heat release options. These drawings serve as illustrative purposes only.

Horizontal Heat Release

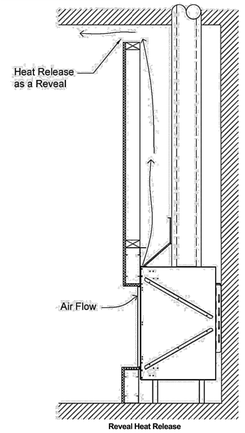

Reveal Heat Release

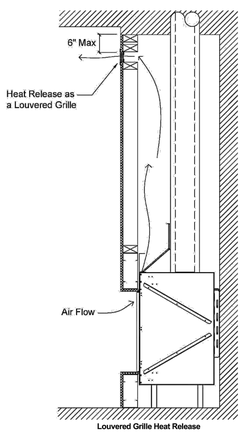

Louvered Grille Heat Release

Framing Dimensions

The following diagrams are for illustrative purposes only. There are multiple approved framing scenarios. A flush application is not the only permitted application. The fireplace may be recessed into the wall. Refer to diagrams and values below and in the following pages for details.

Wilderness 77H Front (F) Series

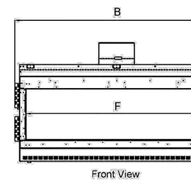

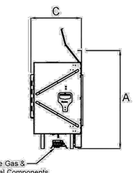



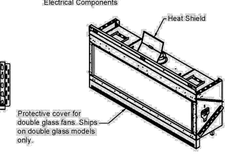

Fireplace	A: Height	B: Length	C: Depth	D: Stand-Off	E: Legs	F: Glass Length	G: Glass Height
77H F Screened	41 11/16"	86 3/4"	21 5/8"	10 7/16"	9 5/8"	77 ½"	21 5/8"
77H F Double Glass	41 11/16"	86 13/16"	22 ¾"	10 7/16"	9 5/8"	77 9/16"	21 5/8"

Framing		
Fireplace	77H F Screened	77H F Double Glass
A: Height	41 11/16"	41 11/16"
B: Length	86 3/4"	86 13/16"
C: Depth	21 5/8"	22 ¾"
V: Firestop	Refer to pipe manufacturer's firestop dimensions	

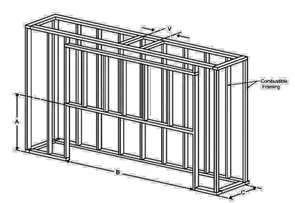

ORTAL INSTALLATION SPECS

N.T.S.

1

signum architecture

JUANCARLOS FERNANDEZ
PROJECT DESIGNER

SIGNUM ARCHITECTURE, LLP 707 963 8831
1675 2nd St, Napa, CA 94559

These drawings are the property of Signum Architecture and have been prepared specifically for this project. These drawings are not to be used for any other project, by any other entity or in another location.

CARMEL SERWIN RESIDENCE

24 TEHAMA
CARMEL, CA 93923
APN 169-421-045

PROJECT NUMBER	2314
DATE	01/31/2025
CHECKED BY	JCF
DRAWN BY	AVH
SCALE	AS NOTED

REVISIONS

100% SCHEMATIC DESIGN	08/07/2024
DESIGN REVIEW STEP 4	01/22/2025
BUILDING PERMIT	01/31/2025

SHEET NAME

FIREPLACE SPECS - LIVING ROOM

SHEET NUMBER

A5.33

BUILDING PERMIT

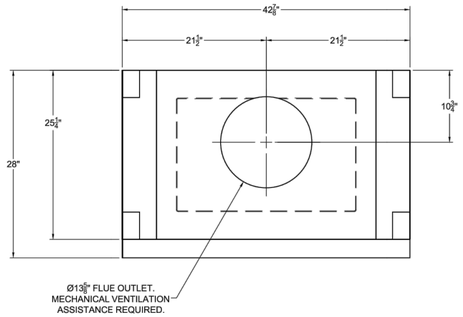

TOP VIEW

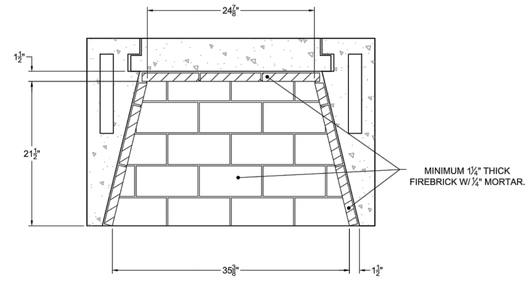

SECTION B-B
HORIZONTAL FIREBRICK DETAIL

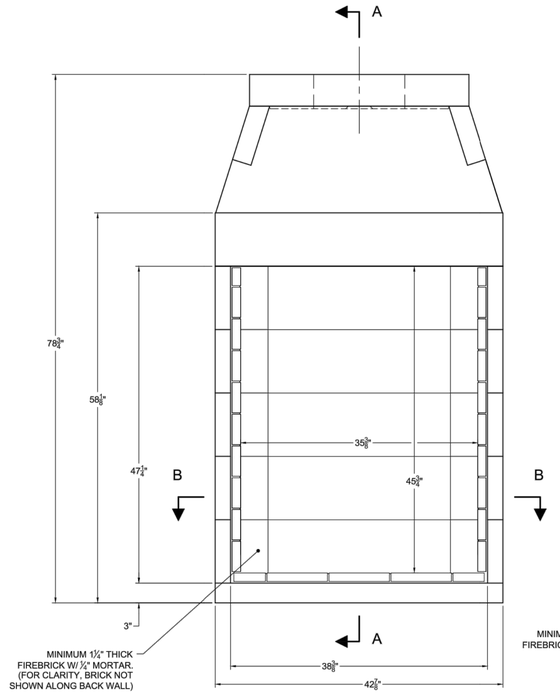

FRONT VIEW

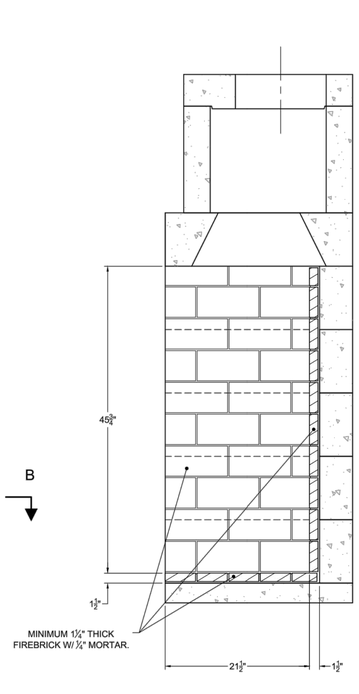

SECTION A-A
VERTICAL FIREBRICK DETAIL

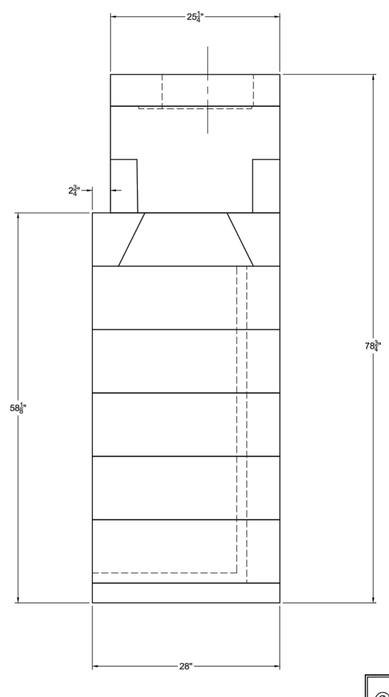

RIGHT-SIDE VIEW

COMPONENT LIST

PART #	DESCRIPTION	QTY.
11	SMOKE DOME (MIDDLE)	2
34	TOP SLOPING	2
M05	BACKWALL-36" (MAG)	5
68	DAMPER BEAM-36"	2
77A	TOP PLATE W/345mm HOLE	1
M90	SIDEWALL (MAG)	10
M91	BASEPLATE-36" (MAG)	1
M94L	MAGNUM DAMPER END; LEFT	1
M94R	MAGNUM DAMPER END; RIGHT	1

GENERAL NOTES

1. THIS IS A CUTOM ISOKERN FIREPLACE AND CARRIES NO LISTING, UL OR OTHERWISE.
2. FIREPLACE SHALL BE INSTALLED WITH THE MINIMUM CLEARANCES TO COMBUSTIBLES AS LISTED BELOW:
   - UNIT FRONT AND ISOKERN CHIMNEY: 0"
   - SIDES AND REAR: 1.5"
   - COMBUSTIBLE SHEATHING ABOVE OPENING TOP: 8"
   - SHEATHING OR TRIM TO OPENING SIDES: 8"
   - MANTLE ABOVE OPENING: 14"
   - OPENING TO SIDEWALLS: 28"
   - HEARTH EXTENSION BEYOND FRONT: 20"
   - HEARTH EXTENSION BEYOND SIDES (FINISHED): 12"
   - COMBUSTIBLE FLOOR: 4"
   - INSULATION FROM FIREBOX (UNSHIELDED): 3"
3. UNLESS THE FIRELITE KIT IS UTILIZED, THE FIREPLACE AND NONCOMBUSTIBLE HEARTH EXTENSION SHALL REST ATOP A NONCOMBUSTIBLE FLOORING SYSTEM WITH NO WOODEN UNDERPINNINGS.
4. MECHANICAL VENTILATION ASSISTANCE IS REQUIRED FOR THIS DESIGN. ENERVEX SHOULD BE CONSULTED TO SPECIFY VENTILATION SYSTEM COMPONENTS/ CAPACITY BASED ON SPECIFIC INSTALLATION REQUIREMENTS.
5. IF YOU INSTALL A VENTED GAS LOG SET (DECORATIVE GAS APPLIANCE), THE LOG SET MUST COMPLY WITH THE STANDARD FOR DECORATIVE GAS APPLIANCE FOR INSTALLATION IN SOLID FUEL BURNING FIREPLACES, ANSI Z21.60 OR Z21.84 AND SHALL ALSO BE INSTALLED IN ACCORDANCE WITH THE NATIONAL FUEL GAS CODE, ANSI 7223/ NFPA 54; LATEST EDITION. IF YOU WISH TO INSTALL AN UNVENTED (VENT-FREE) GAS LOG SET, ONLY UNVENTED GAS LOG SETS WHICH HAVE BEEN FOUND TO COMPLY WITH THE STANDARD FOR UNVENTED ROOM HEATERS, ANSI Z21.11.2 ARE TO BE INSTALLED IN THIS FIREPLACE. CHECK LOCAL CODES FOR COMPLIANCE FOR UNVENTED (VENT FREE) GAS LOG SETS.
6. 4" COMBUSTION AIR INLET KITS ARE RECOMMENDED BY EARTHCORE FOR THE STANDARD AND MAGNUM SERIES FIREPLACES AND MAY HELP IMPROVE FIREPLACE OPERATION IN HOMES TIGHTLY SEALED AND WITH OTHER VENTILATING APPLIANCES INSTALLED. IF THE INSTALLATION IS TO BE LONGER THAN TEN FEET (10'), THEN THE SIX INCH (6") ADAPTER WILL BE NEEDED. THIS ADAPTER WILL ATTACH TO THE EXISTING FOUR INCH (4") SLEEVE OUTSIDE OF THE UNIT. THE SIX INCH ADAPTER INCLUDES AN ADDITIONAL TWENTY FEET OF 6" FLEX HOSE, FOR A MAXIMUM RUN OF THIRTY FEET (30').
7. DRAWINGS ARE FOR DESIGN PURPOSES ONLY AND ARE THE SOLE PROPERTY OF EARTHCORE INDUSTRIES. ANY REPRODUCTION OR UNAUTHORIZED USE IS STRICTLY PROHIBITED.
8. EARTHCORE/ ISOKERN OR ANY DIVISION THEREOF SHALL NOT BE HELD LIABLE FOR ANY INCIDENTAL OR CONSEQUENTIAL DAMAGES OR EVPENSES ARISING OUT OF THE USE OF THE FIREPLACES OR CHIMNEY SYSTEMS.
9. ALWAYS CHECK LOCAL BUILDING CODES GOVERNING FIREPLACES AND FIREPLACE INSTALLATIONS.

DETAILS (N.T.S)

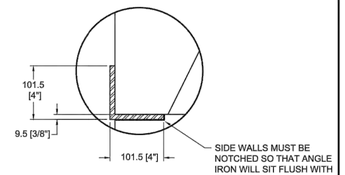

DETAIL A
DAMPER SUPPORT ANGLE

ISOMETRIC VIEW (N.T.S)

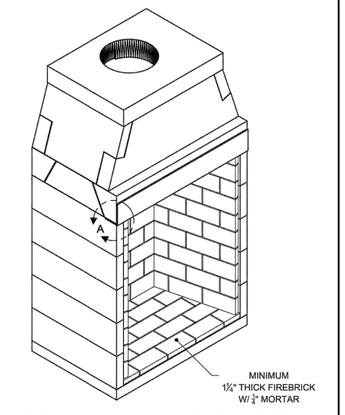

NOTE: WHENEVER THE MAXIMUM DM CHIMNEY HEIGHT OF 57" IS EXCEEDED, OR IN ANY INSTANCE WHERE THE ISOKERN BRICK LEDGE IS USED, IT IS REQUIRED THAT THE FIREBOX/SMOKE DOME ASSEMBLY INCLUDE THE PLACEMENT OF A 4" BY 4" BY 3/8" MINIMUM STEEL ANGLE ACROSS THE FIREBOX OPENING. (SEE DETAIL A)

earthcore® INDUSTRIES, L.L.C.
6909 Phillips Industrial Blvd.
Jacksonville, FL 32256

UNLESS OTHERWISE STATED, ALL DIMENSIONS ARE IN MILLIMETERS
UNSPECIFIED TOLERANCES: ANG. ±; LIN. X ±, X ±, XX ±
THIRD ANGLE PROJECTION

PROJECT: 36" MAGNUM-TALL
DESCRIPTION: FIREPLACE CONSTRUCTION DOCUMENT
MATERIAL: E.C. PUMICE MIXTURE
DRAWN: K.B.H
DATE: 5/1/2020
APPROVED:
DATE:
SIZE: D
SCALE: 1-1/2"=1'-0"
DRAWING #: 82036-B
REV: B
DO NOT SCALE
SHEET # 1 OF 1

ISOKERN SPECS
N.T.S.
1

signum architecture

JUANCARLOS FERNANDEZ
PROJECT DESIGNER

SIGNUM ARCHITECTURE, LLP 707 963 8831
1675 2nd St, Napa, CA 94559

These drawings are the property of Signum Architecture and have been prepared specifically for this project. These drawings are not to be used for any other project, by any other entity or in another location.

CARMEL
SERWIN RESIDENCE

24 TEHAMA
CARMEL, CA 93923
APN 169-421-045

PROJECT NUMBER	2314
DATE	01/31/2025
CHECKED BY	JCF
DRAWN BY	AVH
SCALE	AS NOTED

REVISIONS

100% SCHEMATIC DESIGN	*06/07/2024*
DESIGN REVIEW STEP 4	*01/22/2025*
BUILDING PERMIT	*01/31/2025*

SHEET NAME

FIREPLACE SPECS - OUTDOOR PATIO

SHEET NUMBER

A5.34

BUILDING PERMIT

signum
architecture

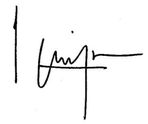

JUANCARLOS FERNANDEZ
PROJECT DESIGNER

SIGNUM ARCHITECTURE, LLP 707 963 8831
1675 2nd St, Napa, CA 94559

These drawings are the property of Signum Architecture and have been prepared specifically for this project. These drawings are not to be used for any other project, by any other entity or in another location.

DOOR No.	ROOM No.	ROOM NAME	OPERATION	PAIR	TYPE	MATL	DOOR SIZE	RATING LABEL	GLAZING	HDWR GRP	FRAME TYPE	FRAME MATL	FINISH	NOTES
FIRST FLOOR 7.01														THERMALLY BROKEN
101A	101	GREAT ROOM	SINGLE SWING	NO	D	GL	5'-0" x 12'-0"		TEMP.			ALUMINUM	DARK BRONZE	THERMALLY BROKEN
105A	105	LAUNDRY	SINGLE SWING	NO	B	GL	3'-0" x 8'-0"		TEMP.			ALUMINUM	DARK BRONZE	
106A	106	POWDER	SINGLE SWING	NO	A	WD	3'-0" x 8'-0"					ALUMINUM	DARK BRONZE	
107A	107	HALLWAY	SINGLE SWING	NO	F	GL	3'-0"" x 10'-0"		TEMP.			ALUMINUM	DARK BRONZE	THERMALLY BROKEN
108A	108	GUEST SUITE	SINGLE SWING	NO	A	WD	3'-0" x 8'-0"					ALUMINUM	DARK BRONZE	
108B	108	GUEST SUITE	SLIDING	NO	G	GL	9'-0" x 9'-8"		TEMP.			ALUMINUM	DARK BRONZE	THERMALLY BROKEN
110A	110	GUEST BATH	SINGLE SWING	NO	A	WD	3'-0" x 8'-0"					ALUMINUM	DARK BRONZE	
111A	111	GARAGE	SINGLE SWING	NO	A	WD	3'-0" x 8'-0"					ALUMINUM	DARK BRONZE	
111B	111	GARAGE	GARAGE DOOR	NO	C	MTL.	9'-0" x 8'-0"		TEMP.			ALUMINUM	DARK BRONZE	
111C	111	GARAGE	GARAGE DOOR	NO	C	MTL.	9'-0" x 8'-0"		TEMP.			ALUMINUM	DARK BRONZE	
111D	111	GARAGE	GARAGE DOOR	NO	C	MTL.	9'-0" x 8'-0"		TEMP.			ALUMINUM	DARK BRONZE	
112A	112	MECHANICAL	SINGLE SWING	NO	A	WD	3'-0" x 8'-0"					ALUMINUM	DARK BRONZE	
113A	113	HALLWAY	SINGLE SWING	NO	E	WD	3'-6" x 10'-0"					ALUMINUM	DARK BRONZE	
113B	113	HALLWAY	SINGLE SWING	NO	E	WD	3'-6" x 10'-0"					ALUMINUM	DARK BRONZE	
114A	114	OFFICE	SINGLE SWING	NO	F	GL	3'-6" x 10'-0"		TEMP.			ALUMINUM	DARK BRONZE	THERMALLY BROKEN
115A	115	MASTER SUITE	SINGLE SWING	NO	F	GL	3'-6" x 10'-0"		TEMP.			ALUMINUM	DARK BRONZE	THERMALLY BROKEN
116A	116	MASTER BATH	POCKET	NO	H	WD	2'-8" x 8'-0"					ALUMINUM	DARK BRONZE	
116B	116	MASTER BATH	SINGLE SWING	NO	A	GL	3'-0" x 8'-0"		TEMP.			ALUMINUM	DARK BRONZE	THERMALLY BROKEN
NOTES:														
1. THE OPERATING / OPENING EFFORT SHALL NOT EXCEED 5 POUNDS AT ALL DOORS.														
2. ALL THRESHOLDS SHALL COMPLY W/CBC STANDARDS FOR ACCESSIBILITY														
3. AA = ANODIZED ALUMINUM														

DOOR SCHEDULE 2

SCALE: NTS

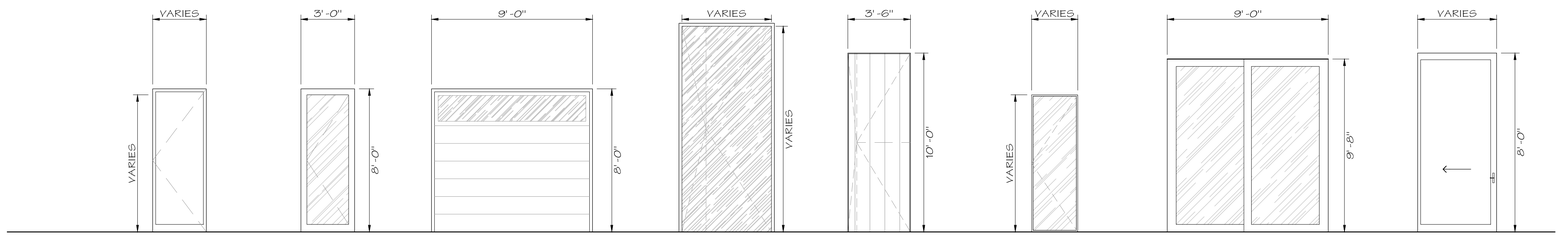

DOOR TYPES 1

SCALE: 1/4" = 1'

CARMEL
SERWIN RESIDENCE

24 TEHAMA
CARMEL, CA 93923
APN 169-421-045

PROJECT NUMBER	2314
DATE	01/31/2025
CHECKED BY	JCF
DRAWN BY	AVH
SCALE	AS NOTED

REVISIONS

100% SCHEMATIC DESIGN	08/07/2024
DESIGN REVIEW STEP 4	01/22/2025
BUILDING PERMIT	01/31/2025

SHEET NAME

DOOR SCHEDULE

SHEET NUMBER

A7.01

BUILDING PERMIT

WINDOW No.	ROOM No.	ROOM NAME	OPERATION	TYPE	MATL	FINISH	MANUFACTURER	MODEL	R.O. WINDOW SIZE	SQ. FT.	HEAD HT. A.F.F.	CLG. HT.	INSUL.	GLAZING	SCREEN	NOTES
FIRST FLOOR 7.02																
101A	101	GREAT ROOM	FIXED	H	AA	DARK BRONZE	AWAKE		36'-0" x 12'-0"		12'-0"	11'-10"		CLR		
101B	101	GREAT ROOM	FIXED	C	AA	DARK BRONZE	AWAKE		15'-6" x 12'-0"		12'-0"	11'-10"		CLR		
101C	101	GREAT ROOM	FIXED	C	AA	DARK BRONZE	AWAKE		15'-6" x 12'-0"		12'-0"	11'-10"		CLR		
105A	105	LAUNDRY	CASEMENT	E	AA	DARK BRONZE	AWAKE		6'-0" x 4'-0"		8'-0"	10'-0"		CLR		
107A	107	HALLWAY	FIXED	A	AA	DARK BRONZE	AWAKE		5'-6" x 10'-0"		10'-0"	10'-0"		CLR		
107B	107	HALLWAY	FIXED	C	AA	DARK BRONZE	AWAKE		11'-5" x 10'-0"		10'-0"	10'-0"		CLR		
108A	108	GUEST SUITE	FIXED	A	AA	DARK BRONZE	AWAKE		4'-0" x 9'-8"		9'-8"	10'-0"		CLR		
108B	108	GUEST SUITE	FIXED	A	AA	DARK BRONZE	AWAKE		4'-0" x 9'-8"		9'-8"	10'-0"		CLR		
110A	110	GUEST BATH	CASEMENT	D	AA	DARK BRONZE	AWAKE		3'-0" x 4'-0"		8'-0"	10'-0"		CLR		
113A	113	HALLWAY	FIXED	A	AA	DARK BRONZE	AWAKE		8'-8" x 10'-0"		10'-0"	10'-0"		CLR		
114A	114	OFFICE	FIXED	B	AA	DARK BRONZE	AWAKE		10'-0" x 10'-0"		10'-0"	10'-0"		CLR		
114B	114	OFFICE	FIXED	B	AA	DARK BRONZE	AWAKE		13'-3" x 10'-0"		10'-0"	10'-0"		CLR		
115A	115	MASTER SUITE	FIXED	C	AA	DARK BRONZE	AWAKE		7'-3" x 10'-0"		10'-0"	10'-0"		CLR		
115B	115	MASTER SUITE	FIXED	B	AA	DARK BRONZE	AWAKE		11'-8" x 10'-0"		10'-0"	10'-0"		CLR		
115C	115	MASTER SUITE	FIXED	B	AA	DARK BRONZE	AWAKE		11'-8" x 10'-0"		10'-0"	10'-0"		CLR		
115D	115	MASTER SUITE	FIXED	F	AA	DARK BRONZE	AWAKE		10'-9" x 10'-0"		10'-0"	10'-0"		CLR		
116A	116	MASTER BATH	FIXED	A	AA	DARK BRONZE	AWAKE		4'-0" x 8'-0"		8'-0"	10'-0"		CLR		
116B	116	MASTER BATH	FIXED	G	AA	DARK BRONZE	AWAKE		14'-9" x 8'-0"		8'-0"	10'-0"		CLR		
NOTES:																
1. AA = ANODIZED ALUMINUM																

WINDOW SCHEDULE

SCALE: NTS

2

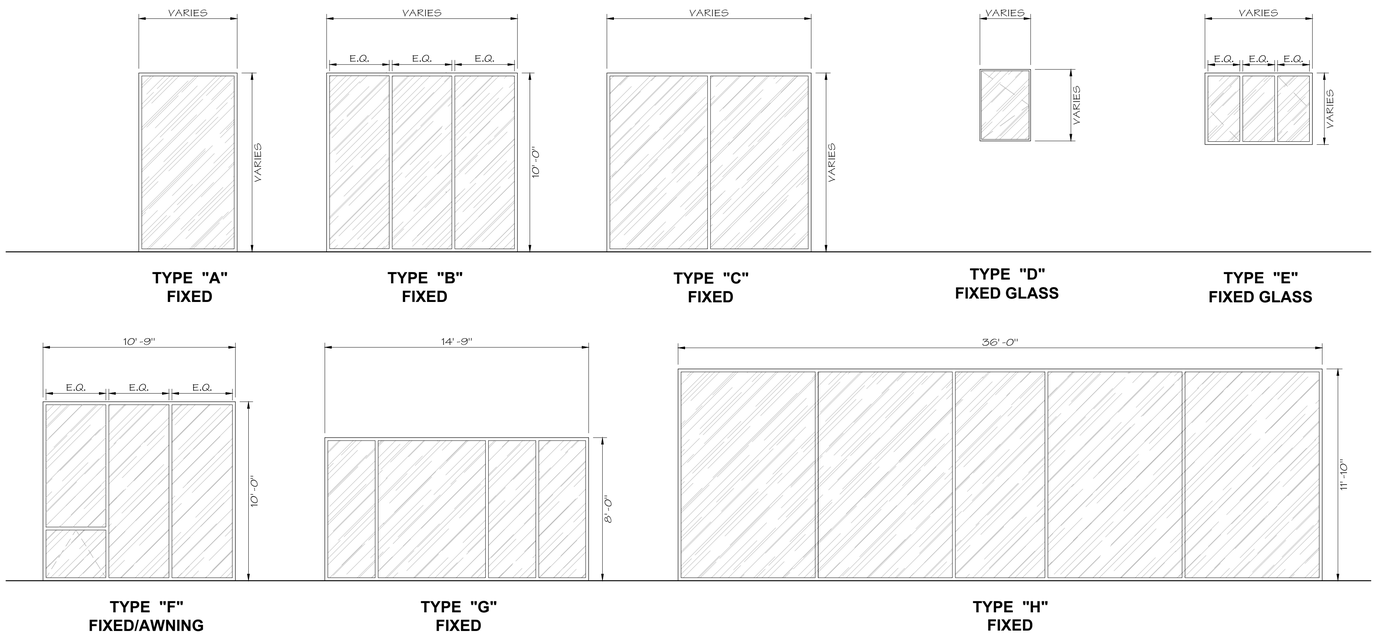

WINDOW TYPES

SCALE: 1/4" = 1'

1

signum architecture

JUANCARLOS FERNANDEZ
PROJECT DESIGNER

SIGNUM ARCHITECTURE, LLP 707 963 8831
1675 2nd St, Napa, CA 94559

These drawings are the property of Signum Architecture and have been prepared specifically for this project. These drawings are not to be used for any other project, by any other entity or in another location.

CARMEL
SERWIN RESIDENCE

24 TEHAMA
CARMEL, CA 93923
APN 169-421-045

PROJECT NUMBER	2314
DATE	01/31/2025
CHECKED BY	JCF
DRAWN BY	AVH
SCALE	AS NOTED

REVISIONS

100% SCHEMATIC DESIGN	08/07/2024
DESIGN REVIEW STEP 4	01/22/2025
BUILDING PERMIT	01/31/2025

SHEET NAME

WINDOW SCHEDULE

SHEET NUMBER

A7.02

BUILDING PERMIT

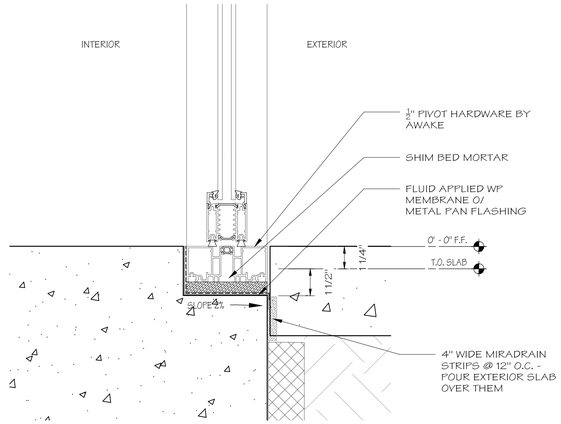

TYP. THRESHOLD - PIVOT 3

SCALE: 3"=1'

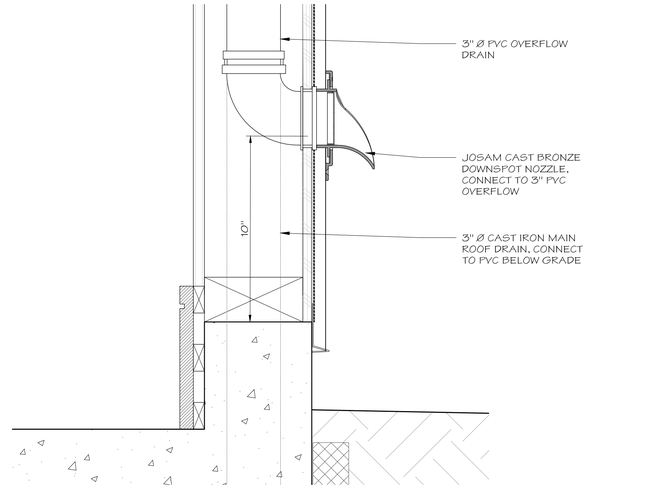

TYP. OVERFLOW DRAIN 2

SCALE: 3"=1'

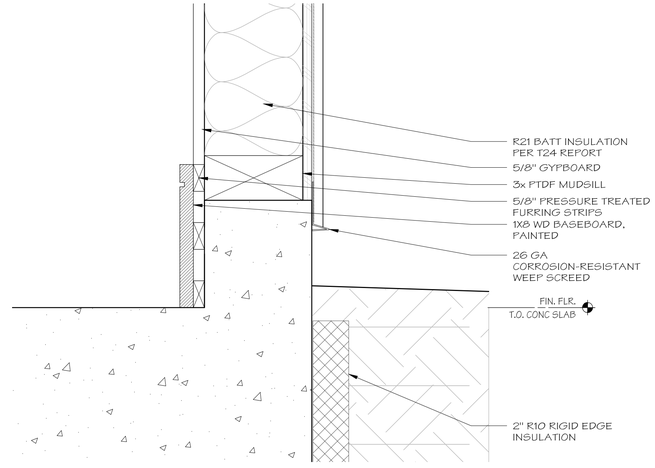

TYP. SLAB EDGE DETAIL 1

SCALE: 3"=1'

signum architecture

JUANCARLOS FERNANDEZ
PROJECT DESIGNER

SIGNUM ARCHITECTURE, LLP 707 963 8831
1675 2nd St, Napa, CA 94559

These drawings are the property of Signum Architecture and have been prepared specifically for this project. These drawings are not to be used for any other project, by any other entity or in another location.

CARMEL
SERWIN RESIDENCE

24 TEHAMA
CARMEL, CA 93923
APN 169-421-045

PROJECT NUMBER	2314
DATE	01/31/2025
CHECKED BY	JCF
DRAWN BY	AVH
SCALE	AS NOTED

REVISIONS

100% SCHEMATIC DESIGN	08/07/2024
DESIGN REVIEW STEP 4	01/22/2025
BUILDING PERMIT	01/31/2025

SHEET NAME

ARCHITECTURAL DETAILS

SHEET NUMBER

A8.01

BUILDING PERMIT

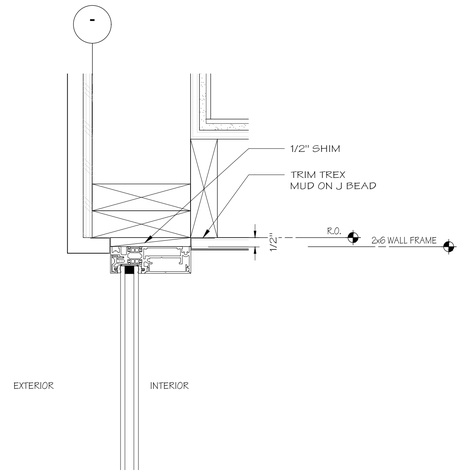

JAMB - TYP. FIXED WINDOWS 3

SCALE: 3"=1'

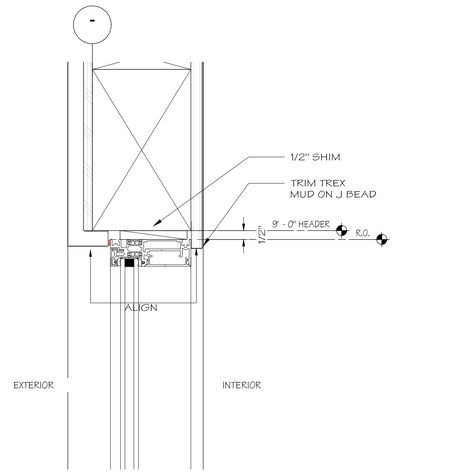

HEADER - TYP. FIXED WINDOW 2

SCALE: 3"=1'

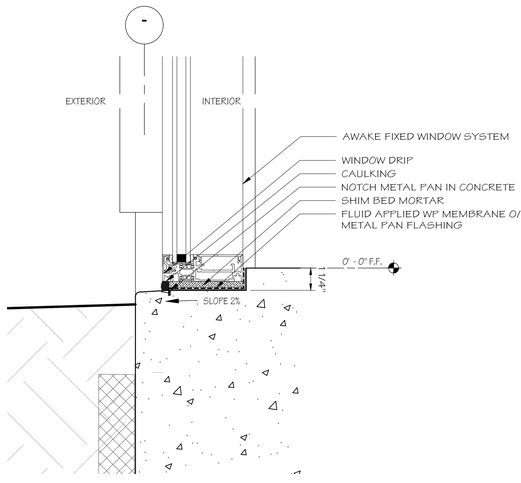

SILL - TYP. FIXED WINDOW 1

SCALE: 3"=1'

signum architecture

JUANCARLOS FERNANDEZ
PROJECT DESIGNER

SIGNUM ARCHITECTURE, LLP 707 963 8831
1675 2nd St, Napa, CA 94559

These drawings are the property of Signum Architecture and have been prepared specifically for this project. These drawings are not to be used for any other project, by any other entity or in another location.

CARMEL
SERWIN RESIDENCE

24 TEHAMA
CARMEL, CA 93923
APN 169-421-045

PROJECT NUMBER	2314
DATE	01/31/2025
CHECKED BY	JCF
DRAWN BY	AVH
SCALE	AS NOTED

REVISIONS

100% SCHEMATIC DESIGN	08/07/2024
DESIGN REVIEW STEP 4	01/22/2025
BUILDING PERMIT	01/31/2025

SHEET NAME

WINDOW DETAILS

SHEET NUMBER

A8.02

BUILDING PERMIT

TITLE | SCALE 3"=1-0" | 16

TITLE | SCALE 3"=1-0" | 15

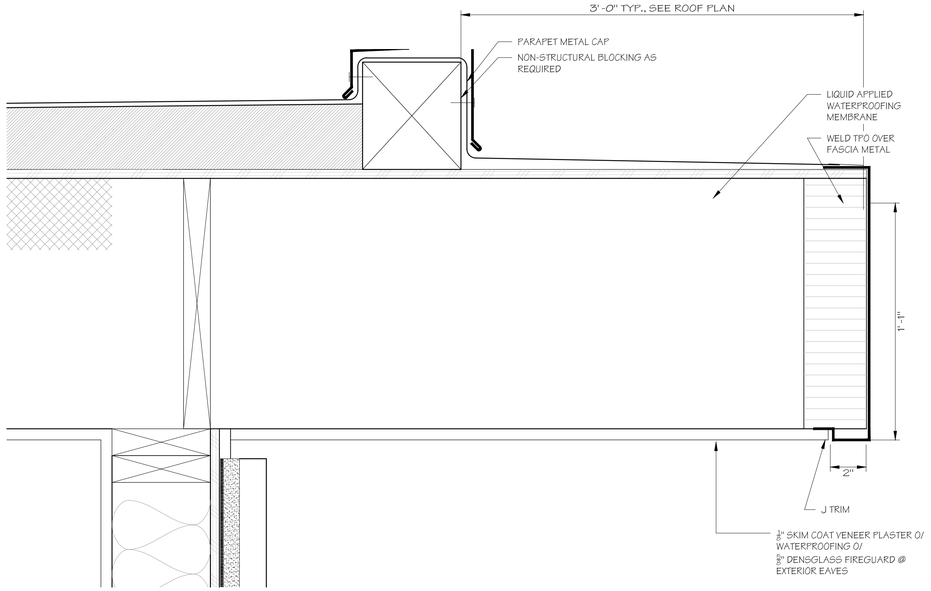

ROOF EDGE DETAIL | SCALE 3"=1-0" | 9

TITLE | SCALE 3"=1-0" | 12

TITLE | SCALE 3"=1-0" | 11

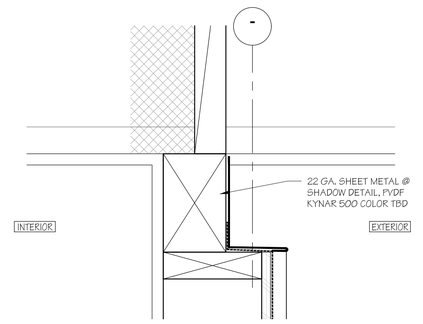

SHADOW DETAIL | SCALE 3"=1-0" | 7

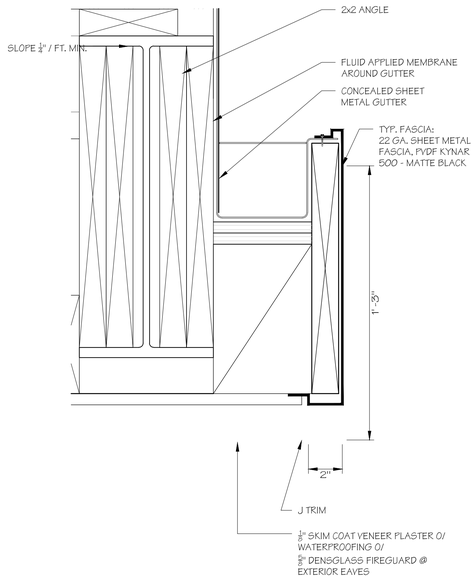

CONCEALED GUTTER DETAIL | SCALE 3"=1-0" | 5

TITLE | SCALE 3"=1-0" | 8

TITLE | SCALE 3"=1-0" | 4

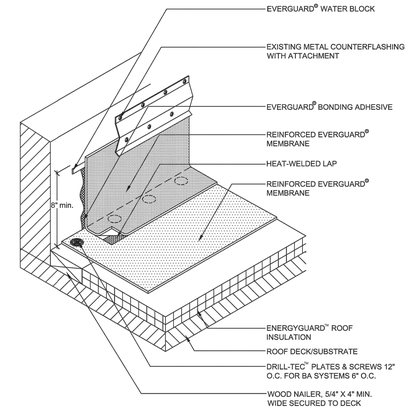

NOTE:

1. ADD BALLAST PER SPEC FOR BALLASTED SYSTEMS.
2. APPLY EVERGUARD® TPO CUT EDGE SEALANT TO ALL CUT REINFORCED TPO EDGES (REFER TO EVERGUARD DETAIL 115).

TYP. COUNTERFLASHING DTL | SCALE N.T.S. | 2

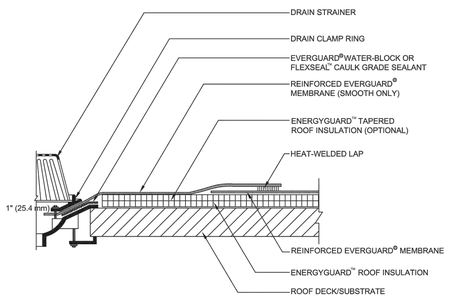

NOTE:

1. A FIELD WELD CANNOT PASS WITHIN 9" (229 mm) OF THE CLAMPING, OR WITHIN THE DRAIN SUMP ITSELF.
2. MEMBRANE MUST EXTEND MINIMUM 1" (25.4 mm) BEYOND THE BOLT HOLES; THE CLAMPING RING BOLTS MUST PENETRATE THE MEMBRANE.
3. TAPER INSULATION TO CREATE A ROOF SUMP MINIMUM 36" x 36" (0.914 m x 0.914 m) IN SIZE (OPTIONAL).
4. DO NOT RUN SEPARATION SHEET INTO BOWL AREA IF USED IN SYSTEM.
5. APPLY EVERGUARD® TPO CUT EDGE SEALANT TO ALL CUT REINFORCED TPO EDGES (REFER TO EVERGUARD® DETAIL 115).

TYP. ROOF DRAIN | SCALE N.T.S. | 1

signum architecture

JUANCARLOS FERNANDEZ
PROJECT DESIGNER

SIGNUM ARCHITECTURE, LLP 707 963 8831
1675 2nd St, Napa, CA 94559

These drawings are the property of Signum Architecture and have been prepared specifically for this project. These drawings are not to be used for any other project, by any other entity or in another location.

CARMEL
SERWIN RESIDENCE

24 TEHAMA
CARMEL, CA 93923
APN 169-421-045

PROJECT NUMBER	2314
DATE	01/31/2025
CHECKED BY	JCF
DRAWN BY	AVH
SCALE	AS NOTED

REVISIONS

100% SCHEMATIC DESIGN	08/07/2024
DESIGN REVIEW STEP 4	01/22/2025
BUILDING PERMIT	01/31/2025

SHEET NAME

ROOF DETAILS

SHEET NUMBER

A8.21

BUILDING PERMIT

signum
architecture

JUANCARLOS FERNANDEZ
PROJECT DESIGNER

SIGNUM ARCHITECTURE, LLP 707 963 8831
1675 2nd St, Napa, CA 94559

These drawings are the property of Signum Architecture and have been prepared specifically for this project. These drawings are not to be used for any other project, by any other entity or in another location.

CARMEL
SERWIN RESIDENCE

24 TEHAMA
CARMEL, CA 93923
APN 169-421-045

PROJECT NUMBER	2314
DATE	01/31/2025
CHECKED BY	JCF
DRAWN BY	AVH
SCALE	AS NOTED

REVISIONS

100% SCHEMATIC DESIGN	*08/07/2024*
DESIGN REVIEW STEP 4	*01/22/2025*
BUILDING PERMIT	*01/31/2025*

SHEET NAME

ENTRY MARKER

SHEET NUMBER

A8.31

BUILDING PERMIT

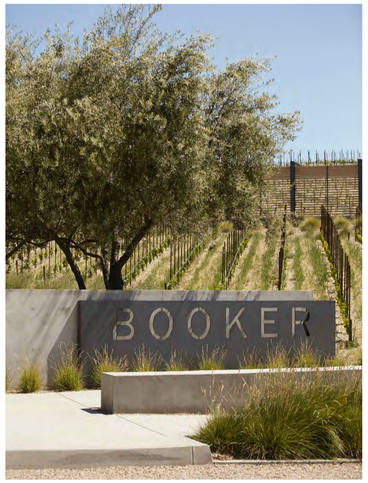

FINISHES PALETTE 1
SCALE: NTS

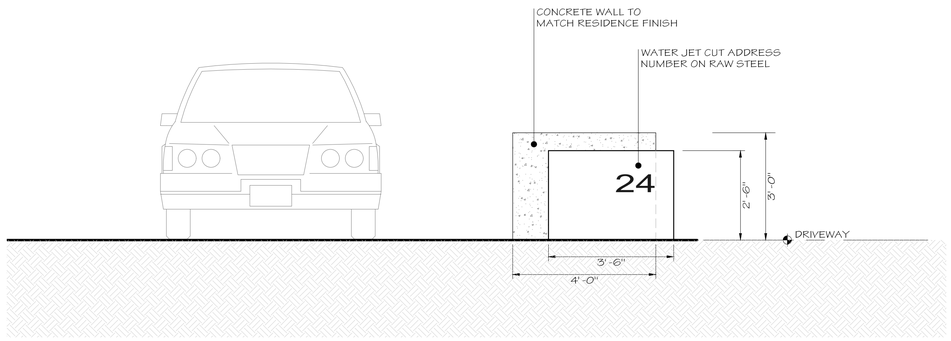

ADDRESS SIGNAGE 1
SCALE: 1/2" = 1'-0"

ACCESSORY SHED - ELEVATIONS 3

SCALE: 1/4" = 1'-0"





(E) PHOTOS - ESCAPESPACE MA SHED 1

SCALE: 1/4" = 1'-0"

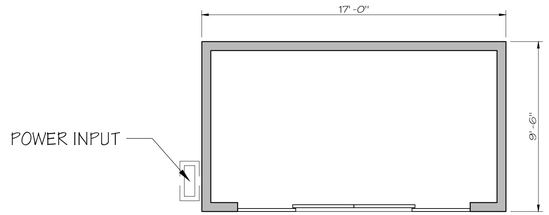

ACCESSORY SHED - PLAN VIEW 1

SCALE: 1/4" = 1'-0"

JUANCARLOS FERNANDEZ
PROJECT DESIGNER

SIGNUM ARCHITECTURE, LLP 707 963 8831
1675 2nd St, Napa, CA 94559

These drawings are the property of Signum Architecture and have been prepared specifically for this project. These drawings are not to be used for any other project, by any other entity or in another location.

CARMEL
SERWIN RESIDENCE

24 TEHAMA
CARMEL, CA 93923
APN 169-421-045

PROJECT NUMBER	2314
DATE	01/31/2025
CHECKED BY	JCF
DRAWN BY	AVH
SCALE	AS NOTED

REVISIONS

100% SCHEMATIC DESIGN	08/07/2024
DESIGN REVIEW STEP 4	01/22/2025
BUILDING PERMIT	01/31/2025

SHEET NAME

ACCESSORY SHED

SHEET NUMBER

A8.41

BUILDING PERMIT

ABBREVIATIONS

@	AT	EST	ESTIMATE	OWJ	OPEN WEB JOIST
Ø	DIAMETER	EW	EACH WAY	PAF	POWDER ACTUATED FASTENER
#	NUMBER OR POUNDS	EX	EXISTING	PJP	PARTIAL JOINT PENETRATION
		EXT	EXTERIOR	PL	PLATE
AB	ANCHOR BOLTS			PLF	POUNDS PER LINEAR FOOT
AGG	AGGREGATE	FF	FINISH FLOOR	PLY	PLYWOOD
ALT	ALTERNATE	FG	FINISH GRADE	PSF	POUNDS PER SQUARE FOOT
ARCH	ARCHITECT	FN	FIELD NAILING	PSI	POUNDS PER SQUARE INCH
		FND	FOUNDATION	PTDF	PRESSURE TREATED DOUGLAS FIR
BLDG	BUILDING	FTG	FOOTING		
BLK	BLOCK			RAD	RADIUS
BN	BOUNDARY NAILING	GA	GAUAGE	REINF	REINFORCEMENT
BM	BEAM	GALV	GALVANIZED	REQD	REQUIRED
BOT	BOTTOM	GLB	GLULAM BEAM	REV	REVISION
BSMT	BASEMENT	GR	GRADE		
				SAD	SEE ARCHITECTURAL DRAWINGS
CBC	CALIFORNIA BUILDING CODE	HDG	HOT DIPPED GALVANIZED	SCD	SEE CIVIL DRAWINGS
CC	CENTER TO CENTER	HDR	HEADER	SCHED	SCHEDULE
CJ	CEILING JOIST	HGR	HANGER	SECT	SECTION
CLG	CEILING	HORIZ	HORIZONTAL	SHT	SHEET
CLR	CLEAR	HSB	HIGH STRENGTH BOLT	SIM	SIMILAR
COL	COLUMN	HT	HEIGHT	SHTHG	SHEATHING
CMU	CONCRETE MASONRY UNIT	HSS	HOLLOW STRUCTURAL SECTION	SMS	SHEET METAL SCREW
CJP	COMPLETE JOINT PENETRATION			SOG	SLAB ON GRADE
CONC	CONCRETE	ID	INSIDE DIAMETER	SS	STAINLESS STEEL
CONT	CONTINUOUS	INCL	INCLUDING	STIFF	STIFFENER
CTRD	CENTERED			STL	STEEL
CSK	COUNTERSUNK	LAT	LATERAL	STRUCT	STRUCTURAL
		LL	LIVE LOAD	SYM	SYMMETRICAL
DBL	DOUBLE	LLH	LONG LEG HORIZONTAL	SWS	SHEARWALL SCHEDULE
DET	DETAIL	LLV	LONG LEG VERTICAL		
DF	DOUGLAS FIR	LWT	LIGHTWEIGHT	T&B	TOP AND BOTTOM
DIAG	DIAGONAL			T&G	TONGUE AND GROOVE
DIA	DIAMETER	MAT	MATERIAL	THK	THICKNESS
DIM	DIMENSION	MAX	MAXIMUM	TOF	TOP OF FOOTING
DO	DITTO	MB	MACHINE BOLT	TOS	TOP OF STEEL
DWG	DRAWINGS	MECH	MECHANICAL	THRD	THREADED
		MFR	MANUFACTURER	THRU	THROUGH
(E)	EXISTING	MIN	MINIMUM	TN	TOENAIL
EA	EACH	MISC	MISCELLANEOUS	TWS	THREADED WELDED STUD
EE	EACH END			TYP	TYPICAL
EF	EACH FACE	(N)	NEW		
EL	ELEVATION	NOM	NOMINAL	UON	UNLESS OTHERWISE NOTED
EMBED	EMBEDMENT	NS	NEAR SIDE		
ENG	ENGINEER	NTS	NOT TO SCALE	VERT	VERTICAL
EN	EDGE NAILING			VIF	VERIFY IN FIELD
EOR	ENGINEER OF RECORD	oc	ON CENTER		
EQUIV	EQUIVALENT	OD	OUTSIDE DIAMETER	w/	WITH
EQ	EQUAL	OPNG	OPENING	WF	WIDE FLANGE
ES	EACH SIDE	OPP	OPPOSITE	WT	WEIGHT
				WWF	WELDED WIRE FABRIC

SYMBOLS

GRIDLINES

DETAIL REFERENCE
SHEET REFERENCE

CONCRETE

EARTH

GRAVEL

X'-XX" SHEARWALL TYPE & MINIMUM LENGTH

CONTINUOUS WOOD MEMBER OR POST ABOVE & BELOW

BLOCKING or POST BELOW

POST ABOVE

STEEL BEAM

WOOD STUD WALL BELOW

WOOD STUD WALL ABOVE

SIMPSON STRONG-TIE HANGER

GENERAL

1. THE INTENT OF THESE DRAWINGS IS TO SHOW ALL ITEMS NECESSARY TO COMPLETE THE CONSTRUCTION FOR THE STRUCTURAL PORTIONS OF THIS BUILDING.
2. WHERE SOME FEATURES OF CONSTRUCTION ARE NOT ENTIRELY SHOWN, THEIR CONSTRUCTION SHALL BE AS SHOWN FOR SIMILAR ELEMENTS.
3. ALL CONSTRUCTION SHALL BE IN ACCORDANCE WITH THE MINIMUM REQUIREMENTS OF THE 2022 CALIFORNIA BUILDING CODE & ALL LOCAL JURISDICTION AMENDMENTS.
4. DO NOT SCALE DRAWINGS. SCALE IS FOR REFERENCE ONLY.
5. TYPICAL DETAILS AND NOTES SHOWN ON THESE SHEETS SHALL APPLY UNLESS SPECIFICALLY SHOWN OR OTHERWISE NOTED.
6. THESE DRAWINGS REPRESENT THE FINISHED STRUCTURE AND DO NOT INDICATE THE METHOD OF CONSTRUCTION. IT IS THE CONTRACTOR'S SOLE RESPONSIBILITY TO PROVIDE PROTECTION OF LIFE AND PROPERTY DURING CONSTRUCTION. THE DESIGN AND CONSTRUCTION OF ALL SHORING, BRACING, AND FORM WORK SHALL BE THE RESPONSIBILITY OF THE CONTRACTOR UNLESS OTHERWISE NOTED.
7. THE CONTRACTOR SHALL CHECK, FIELD VERIFY, AND COORDINATE, AS REQUIRED, ALL DIMENSIONS AND RECOMMENDATIONS WITHIN THESE DRAWINGS, AND BETWEEN THESE DRAWINGS AND DOCUMENTS PREPARED BY OTHER CONSULTANTS, INCLUDING, BUT NOT LIMITED TO, ARCHITECTURAL DRAWINGS, CIVIL DRAWINGS, GEOTECHNICAL RECOMMENDATIONS, EXISTING SITE CONDITIONS, ETC. ANY DISCREPANCIES SHALL BE BROUGHT TO THE ATTENTION OF THE ARCHITECT & EOR PRIOR TO BEGINNING WORK ON AREAS OF WORK AFFECTED BY THESE DISCREPANCIES
8. DRAINAGE AND WATERPROOFING SYSTEMS ARE NOT PART OF THESE DRAWINGS AND SHALL BE DESIGNED BY OTHERS AS REQUIRED.

DESIGN LOADS

GENERAL		EARTHQUAKE LOAD	
BUILDING CODE	2022 CALIFORNIA BUILDING CODE	IMPORTANCE FACTOR	I_e = 1.0
RISK CATEGORY	II	SITE CLASS	C
DEAD LOAD		DESIGN CATEGORY	D
ROOF	21 PSF	SPECTRAL ACCELERATIONS	S_s = 1.305, S_1 = 0.484
FIRST FLOOR	N/A	DESIGN ACCELERATIONS	S_{DS} = 1.044, S_{D1} = 0.484
LIVE LOAD			
ROOF	20 PSF	RESPONSE MODIFICATION COEFFICIENT	R = 6.5 (LIGHT-FRAMED SHEATHED WALLS)
TYPICAL FLOOR	40 PSF	ANALYSIS PROCEDURE USED	EQUIVALENT LATERAL FORCE
WIND LOAD		SEISMIC RESPONSE COEFFICIENT	C_s = 0.16
DESIGN WIND SPEED	92 MPH	REDUNDANCY FACTOR	ρ = 1.3
DESIGN PROCEDURE	DIRECTIONAL PROCEDURE		
EXPOSURE CATEGORY	B		
DIRECTIONALITY FACTOR	K_d = 0.85		
TOPOGRAPHIC FACTOR	K_{zt} = 1.07		

FOUNDATIONS

1. BKG STRUCTURAL ENGINEERS IS NOT RESPONSIBLE FOR THE SUPPORTING SOILS. THE FOUNDATION DESIGN IS BASED UPON A GEOTECHNICAL REPORT PREPARED BY HARO, KASUNICH, AND ASSOCIATES, INC., 116 E. LAKE AVE, WATSONVILLE, CALIFORNIA PH: 831.722.4175, AND DATED 12.31.2024 (PROJECT NO. M12495). ALL FOUNDATION EXCAVATION, EARTHWORK, SITE PLACEMENT OF CONCRETE, DRAINAGE, ETC. SHALL BE PERFORMED IN ACCORDANCE WITH THE GEOTECHNICAL REPORT. GEOTECHNICAL CONSTRUCTION OBSERVATION SHALL BE PERFORMED AS SPECIFIED IN THE GEOTECHNICAL REPORT.
2. THE ALLOWABLE SOIL BEARING PRESSURE USED IS 3000 PSF (DEAD + LIVE LOADS) WITH ONE-THIRD ADDITIONAL INCREASE FOR SHORT TERM LOADING (WIND OR SEISMIC)
3. ALL FOUNDATION ELEMENTS SHALL BE SUPPORTED ON COMPETENT MATERIAL. IN THE EVENT THE CONTRACTOR HAS REASON TO BELIEVE THAT THE SUPPORTING SOIL MAY NOT BE COMPETENT TO SUPPORT THE PROPOSED BUILDING STRUCTURE, THE CONTRACTOR SHALL IMMEDIATELY NOTIFY THE ENGINEER BEFORE PROCEEDING WITH ANY FURTHER WORK.
4. ALL EXCAVATIONS SHALL BE CLEAN OF ALL DEBRIS, AND ALL STANDING WATER SHALL BE REMOVED.
5. SHALLOW FOUNDATION ELEMENTS SHALL BE STEPPED WHERE THE BOTTOM OF FOOTING IS AT A SLOPE GREATER THAN 10:1 (HORIZONTAL:VERTICAL)

REINFORCED CONCRETE

1. ALL WORK SHALL BE IN ACCORDANCE WITH THE LATEST EDITION OF ACI 301: SPECIFICATION FOR STRUCTURAL CONCRETE FOR BUILDINGS. ALL STRUCTURAL CONCRETE SHALL COMPLY WITH THE PROVISIONS OF ACI 318-19.
2. ALL CONCRETE, AT A MINIMUM, SHALL CONFORM TO THE FOLLOWING:
   - ALL CONCRETE SHALL BE NORMAL-WEIGHT (150 PCF) AND READY-MIXED
   - ALL AGGREGATE SHALL CONFORM TO ASTM C33. COARSE AGGREGATE SHALL BE A MINIMUM OF 3/4", UNLESS A SMALLER PUMP MIX IS APPROVED BY THE ENGINEER PRIOR TO THE ORDERING AND PLACEMENT OF CONCRETE
   - ALL CEMENT SHALL CONFORM TO ASTM C150, TYPE II
   - THE WATER TO CEMENT RATIO SHALL NOT EXCEED 0.45
   - THE MEASURED SLUMP SHALL BE 4 INCHES +/- 1"
   - ALL WATER SHALL BE POTABLE, CLEAN, AND NOT DETRIMENTAL TO THE CONCRETE
   - ENTRAINED AIR CONTENT SHALL NOT EXCEED 3% WHERE A TROWEL FINISH WILL BE APPLIED
   - MINIMUM 28-DAY COMPRESSIVE STRENGTH SHALL BE 3,000 PSI (SPECIAL INSPECTION NOT REQUIRED)
   - 25% FLY ASH OR SLAG IS ACCEPTABLE AS A CEMENT SUBSTITUTE. IF A GREATER PERCENTAGE IS NEEDED, CONTACT EOR.
   - CARE SHALL BE TAKEN BY THE CONTRACTOR DURING THE CURING PROCESS TO MINIMIZE TEMPERATURE / SHRINKAGE CRACKING PARTICULARLY WHEN USING LOW CARBON CEMENT.
3. ALL REINFORCING STEEL SHALL CONFORM TO ASTM A615 GRADE 60 (#3 BARS MAY BE GRADE 40), EXCEPT WHERE WELDING OF REINFORCEMENT IS SHOWN ON THESE DRAWINGS IN WHICH CASE THE REINFORCING SHALL CONFORM TO ASTM A706. ALL REINFORCEMENT SHALL BE HELD SECURELY IN POSITION WITH DEVICES AND/OR TIES TO PREVENT DISPLACEMENT DURING PLACEMENT OF CONCRETE.
4. REINFORCEMENT SHALL NOT BE WELDED EXCEPT WHERE SPECIFICALLY SHOWN ON THESE DRAWINGS.
5. ALL DIMENSIONS SHOWN FOR LOCATION OF REINFORCING ARE TO THE FACE OF MAIN BARS, TIES, ETC. (CLEAR COVER). CONCRETE COVERAGE SHALL BE AS FOLLOWS, UNLESS OTHERWISE NOTED:

TYPE OF CONCRETE	CLEAR COVER UNO (INCHES)
CAST AGAINST AND PERMANENTLY EXPOSED TO EARTH OR WEATHER	3"
EXPOSED TO EARTH OR WEATHER BUT CAST IN FORMS	
#5 BARS AND SMALLER	1 1/2"
#6 BARS AND LARGER	2"
NOT EXPOSED TO EARTH OR WEATHER	
SLABS AND WALLS	3/4"
BEAMS AND COLUMNS	1 1/2"

6. THE CONTRACTOR SHALL BE RESPONSIBLE FOR VERIFYING AND COORDINATING WITH ALL TRADES THE LOCATION OF ANY ELEMENTS TO BE EMBEDDED IN OR PENETRATING CONCRETE PRIOR TO THE PLACEMENT OF CONCRETE. NO PIPES, DUCTS, OR BLOCKOUTS SHALL BE PLACED IN CONCRETE SLABS OR WALLS UNLESS SPECIFICALLY DETAILED ON THESE DRAWINGS.
7. THE CONTRACTOR SHALL SUBMIT ALL PROPOSED LOCATIONS OF CONSTRUCTION JOINTS TO THE ENGINEER AND ARCHITECT FOR APPROVAL PRIOR TO PLACING CONCRETE.
8. ALL HARDENED SURFACES OF CONSTRUCTION JOINTS SHALL BE CLEANED TO REMOVE DUST, CHIPS, OR OTHER FOREIGN MATERIALS AND SHALL BE ROUGHENED TO A MINIMUM AMPLITUDE OF 1/4" PRIOR TO PLACING CONCRETE.
9. DO NOT REMOVE ANY CONCRETE FORMS UNTIL THE CONCRETE HAS ATTAINED SUFFICIENT STRENGTH TO SUPPORT ITS OWN WEIGHT AND CONSTRUCTION LIVE LOADS WITHOUT DAMAGE TO THE STRUCTURE.

POST-INSTALLED EPOXY ANCHORS

1. WHERE EPOXY IS INDICATED ON THESE DRAWINGS, EPOXY SHALL BE SET-3G (ICC-ES ESR #4057) AS MANUFACTURED BY SIMPSON STRONG-TIE OR APPROVED EQUAL.
2. ALL EPOXY SHALL BE INSTALLED PER MANUFACTURER'S APPROVED ICC REPORT, AND THE APPROVED REPORT SHALL BE KEPT ON THE JOBSITE AT ALL TIMES FOR REFERENCE BY INTERESTED PARTIES.
3. THE CONTRACTOR SHALL CAREFULLY READ THE ICC REPORT FOR CORRECT INSTALLATION INSTRUCTIONS. EPOXY INSTALLATION REQUIRES SPECIAL INSPECTION EXCEPT EPOXY TO BE USED FOR SHEAR DOWELS BETWEEN (E) AND (N) FOUNDATION ELEMENTS DOES NOT REQUIRE SPECIAL INSPECTION UNLESS OTHERWISE REQUIRED BY THE BUILDING DEPARTMENT.

STRUCTURAL STEEL

1. FABRICATION AND ERECTION OF ALL STEEL USED ON THIS PROJECT SHALL BE IN ACCORDANCE WITH AISC 360-16: SPECIFICATION FOR STRUCTURAL STEEL BUILDINGS, UNLESS OTHERWISE NOTED ON THESE PLANS.
2. ALL WELDER QUALIFICATION REQUIREMENTS, AND WELDING PROCEDURES SHALL BE IN ACCORDANCE WITH THE AISC CODE OF STANDARD PRACTICE (AISC 303-10), AWS D1.1, AND WHERE REQUIRED, AWS D1.8. ALL WELDING SHALL BE DONE BY CERTIFIED WELDER, WITH CURRENT CERTIFICATIONS FOR THE TYPE OF WELD AND WELDING POSITION REQUIRED. ALL ELECTRODES SHALL BE E70XX UNLESS OTHERWISE NOTED OR APPROVED.
3. DO NOT WELD ANY STRUCTURAL STEEL MEMBER OR CONNECTION UNLESS IT IS EXPLICITLY SHOWN ON THESE DRAWINGS.
4. ALL MISC STRUCTURAL STEEL SHALL CONFORM TO ASTM A36, UNLESS OTHERWISE NOTED ON THESE PLANS. ALL HSS SECTIONS SHALL CONFORM TO ASTM A500 GRADE C, AND ALL WIDE FLANGE SHAPES SHALL CONFORM TO ASTM A992 GRADE 50.
5. ALL HIGH-STRENGTH BOLTS SHALL BE ASTM F3125 GRADE A325 (THREADS NOT EXCLUDED), UNLESS OTHERWISE NOTED. ALL BOLTS USED FOR ERECTION AND WOOD CONNECTIONS SHALL BE ASTM A307, UNLESS OTHERWISE NOTED. ALL ANCHOR RODS SHALL CONFORM TO ASTM F1554, GRADE 36.
6. ALL BOLT HOLES SHALL BE STANDARD SIZE IN ACCORDANCE WITH AISC SPECIFICATION FOR STRUCTURAL JOINTS UNLESS OTHERWISE NOTED ON THESE PLANS. ALL BOLTS FOR EXTERIOR USE SHALL BE HOT-DIP GALVANIZED IN ACCORDANCE WITH ASTM A153, CLASS C.
7. PENETRATIONS THROUGH STRUCTURAL STEEL MEMBERS ARE NOT ALLOWED UNLESS THEY ARE SPECIFICALLY DETAILED ON THESE PLANS.
8. ALL STRUCTURAL STEEL SHALL BE DELIVERED WITH A MINIMUM OF ONE COAT OF SHOP APPLIED PRIMER EXCEPT AT SURFACES WHERE HIGH-STRENGTH BOLTS WILL BE APPLIED, WHERE FIREPROOFING WILL BE APPLIED, OR WHERE STEEL WILL BE EMBEDDED IN CONCRETE. ALL EXTERIOR STRUCTURAL STEEL SHALL BE HOT-DIP GALVANIZED or STAINLESS STEEL.
9. USE NON-SHRINK GROUT UNDER ALL COLUMN BASES, UNLESS OTHERWISE NOTED ON THESE PLANS. GROUT SHALL MANUFACTURED BY FIVE STAR GROUT, MASTER BUILDERS, SIKA OR APPROVED EQUAL.
10. THE CONTRACTOR SHALL SUBMIT STEEL SHOP DRAWINGS SHOWING THE FABRICATION AND ERECTION OF ALL STRUCTURAL STEEL TO BE USED ON THIS PROJECT FOR REVIEW AND APPROVAL BY THE ENGINEER PRIOR TO ORDERING OR INSTALLING THE STRUCTURAL STEEL ELEMENTS.

STRUCTURAL SUBMITTALS

1. IN ORDER TO VERIFY THAT THE STRUCTURAL DESIGN INTENT OF CERTAIN ELEMENTS IS PROPERLY UNDERSTOOD, SUBMITTALS MAY BE REQUIRED FOR REVIEW AND APPROVAL BY THE EOR. THIS REVIEW SHALL NOT BE CONSIDERED TO BE ALL-ENCOMPASSING, AND WILL BE RESTRICTED TO A BRIEF REVIEW, FOR GENERAL CONFORMANCE WITH THE DESIGN DOCUMENTS. VERIFYING COMPLIANCE WITH ALL REQUIREMENTS OF THESE DESIGN DOCUMENTS IS THE RESPONSIBILITY OF THE CONTRACTOR.

FOR THIS PROJECT THE FOLLOWING SHALL BE SUBMITTED TO THE EOR FOR REVIEW AND APPROVAL PRIOR TO PROCEEDING WITH ANY WORK RELATED TO THESE ELEMENTS:
- ROOF TRUSS SHOP DRAWINGS
- CONCRETE MIX DESIGNS
- STRUCTURAL STEEL SHOP DRAWINGS
- ANY REQUESTS FOR SUBSTITUTIONS OR DEVIATIONS FROM THESE DRAWINGS.

ROUGH CARPENTRY

1. ALL STRUCTURAL LUMBER SHALL BE DOUGLAS FIR-LARCH OF THE GRADE INDICATED BELOW OR BETTER, UNLESS OTHERWISE NOTED ON THESE PLANS:

TYPE OF FRAMING	MINIMUM GRADE
2x HORIZONTAL FRAMING	NO. 2
4x OR LARGER HORIZONTAL FRAMING	NO. 1
STUDS	NO. 2
4x POSTS	NO. 1
5x POSTS OR LARGER	NO. 1
WALL PLATES	NO. 1
WOOD MUDSILLS	PT NO. 2

2. ALL NAILS SHALL BE COMMON STEEL WIRE NAILS SIZED AND SPACED AS SPECIFIED ON THESE DRAWINGS. ALL FASTENERS INSTALLED IN PRESSURE-TREATED WOOD SHALL BE HOT-DIPPED GALVANIZED.
3. ALL WOOD STRUCTURAL CONNECTORS (JOIST HANGERS, FRAMING CLIPS, ETC.) SHALL BE MANUFACTURED BY SIMPSON STRONG-TIE. OTHER BRANDS SHALL NOT BE USED UNLESS THEY ARE SPECIFICALLY APPROVED BY THE EOR. AT A MINIMUM, Z-MAX FINISH SHALL BE USED FOR ALL STRUCTURAL CONNECTORS IN CONTACT WITH PRESSURE-TREATED LUMBER. WHERE CONNECTORS ATTACH TO PRESSURE-TREATED MUDSILLS IN INTERIOR, DRY CONDITIONS A MINIMUM G90 COATING MAY BE USED WHERE APPROVED BY SIMPSON STRONG-TIE, PROVIDED THE CONNECTOR IS SEPARATED FROM THE PRESSURE TREATED LUMBER BY A WATERPROOF BARRIER (GRACE VYCOR OR APPROVED EQUAL).
4. ALL STUD WALLS SHALL BE FRAMED WITH FULL-HEIGHT STUDS @ 16" oc UNLESS OTHERWISE NOTED ON THESE DRAWINGS.
5. CUTTING, BORING, OR NOTCHING OF GIRDERS, BEAMS, JOISTS, AND OTHER STRUCTURAL ELEMENTS IS NOT ALLOWED UNLESS SPECIFICALLY DETAILED ON THESE DRAWINGS OR APPROVED BY THE EOR.
6. HOLES FOR BOLTS IN WOOD SHALL BE DRILLED A MAXIMUM OF 1/16" LARGER THAN BOLT DIAMETER. THE HEADS OF ALL BOLTS AND LAG SCREWS SHALL BE SEPARATED FROM WOOD BY A PROPERLY SIZED METAL WASHER.
7. ALL BOLTS AND SCREWS SHALL BE TIGHTENED AT THE TIME OF ERECTION AND RE-TIGHTENED BEFORE COMPLETION OF WORK OR BEFORE SUCH BOLTS AND SCREWS ARE COVERED BY ELEMENTS MAKING THEM INACCESSIBLE.
8. ALL WOOD IN CONTACT WITH CONCRETE, GROUT, OR MASONRY, SHALL BE PRESSURE-TREATED OR OF A NATURALLY DURABLE SPECIES OF WOOD. ALL PRESSURE-TREATED WOOD SHALL CONFORM TO AWPA STANDARD U1. ALL CUTS / NOTCHES / HOLES IN PRESSURE-TREATED LUMBER SHALL BE PROPERLY TREATED WITH WOOD PRESERVATIVE IN ACCORDANCE WITH AWPA M4. WHERE PRESSURE-TREATED WOOD IS USED IN INTERIOR APPLICATIONS, OR IN THE CRAWLSPACE, THE WOOD PRESERVATIVE SHALL BE RATED FOR INTERIOR USE.
9. MACHINE NAILING SHALL BE SUBJECT TO APPROVAL BY THE EOR AND THE BUILDING DEPARTMENT. ALL MACHINE NAILS SHALL HAVE EQUIVALENT SHANK DIAMETER AND NAIL LENGTH TO THOSE SPECIFIED ON THESE PLANS. MACHINE NAILING WILL NOT BE ALLOWED IF THE CONTRACTOR CAN NOT CONSISTENTLY PREVENT THE NAILHEADS FROM PENETRATING THE OUTER PLYWOOD LAYER MORE THAN NORMAL FOR A HAND HAMMER OR IF MINIMUM ALLOWABLE EDGE DISTANCES CANNOT BE CONSISTENTLY MAINTAINED.
10. USE DOUBLE FLOOR JOISTS UNDER ALL NONBEARING PARTITION WALLS WHEN PARALLEL TO FLOOR FRAMING. USE CONTINUOUS SOLID BLOCKING WHERE FLOOR FRAMING IS PERPENDICULAR.
11. ALL WOOD FRAMING SHALL BE PROPERLY WRAPPED FOR SHIPPING AND PROTECTED FROM THE ELEMENTS UNTIL THEY ARE READY TO BE INSTALLED.
12. SAWN LUMBER SHALL HAVE A MAXIMUM MOISTURE CONTENT OF 19% AT THE TIME OF INSTALLATION. ALL STRUCTURAL COMPOSITE LUMBER SHALL HAVE A MOISTURE CONTENT LESS THAN 16% AT THE TIME OF INSTALLATION. MOISTURE CONTENT OF SAWN LUMBER SHALL BE CHECKED PRIOR TO CLOSE-IN TO CONFIRM MOISTURE CONTENT DOES NOT EXCEED STATED VALUES OR EXCEED CALGREEN REQUIREMENTS. CONTRACTOR SHALL PROVIDE ALLOWANCE FOR DIFFERENTIAL SHRINKAGE OF LUMBER.
13. SOLID BLOCKING SHALL BE PLACED BETWEEN ALL JOISTS, RAFTERS, AND BEAMS AT ALL POINTS OF SUPPORT UNLESS THE JOIST, RAFTER, OR BEAM IS OTHERWISE PREVENTED FROM ROTATION BY THE INSTALLATION OF STEEL HARDWARE, STRAPS, OR BOLTS AS DETAILED ON THESE PLANS.
14. ALL TOP PLATES SHALL BE MADE UP OF (2)-2x MEMBERS, STITCH NAILED TOGETHER WITH A MINIMUM OF (2)-16d NAILS @ 16" oc. SPLICES SHALL BE OFFSET A MINIMUM OF 48" AND NAILED WITH A MINIMUM OF 24 -16D UNLESS OTHERWISE MECHANICALLY FASTENED TO TRANSFER THE ANTICIPATED FORCES ACROSS THE SPLICE.
15. MULTIPLE JOISTS SHALL BE LAMINATED TOGETHER WITH A MINIMUM OF (2)-16D NAILS INSTALLED AT 16" oc. THE NAILS SHALL BE STAGGERED AS REQUIRED TO PREVENT SPLITTING OF THE WOOD.
16. MINIMUM NAILING REQUIREMENTS SHALL BE AS SHOWN IN TABLE 2304.10.1 OF THE 2022 CBC UNLESS OTHERWISE NOTED ON THESE PLANS.
17. All MEMBERS SHALL BE INSTALLED CONTINUOUS, WITHOUT SPLICES, BETWEEN SUPPORT POINTS UNLESS OTHERWISE SHOWN ON THESE DRAWINGS.
18. STRUCTURAL LUMBER SHALL NOT BE RIPPED UNLESS SPECIFICALLY SHOWN ON THESE DRAWINGS.
19. ALL STRUCTURAL COMPOSITE LUMBER SHALL BE MANUFACTURED BY TRUS JOIST AND SHALL CONFORM TO ICC-ES ESR#-1387 UNLESS OTHERWISE APPROVED BY THE EOR. ALL LAMINATED VENEER LUMBER (LVL) SHALL HAVE A MINIMUM E = 2,000,000 PSI, Fv = 285 PSI, AND Fb = 2600 PSI. ALL PARALLEL STRAND LUMBER (PSL) SHALL HAVE A MINIMUM E = 2,200,000 PSI, Fv = 290 PSI, AND Fb = 2900 PSI.
20. AT RIDGE CONDITIONS CONTRACTOR TO PROVIDE CS16 STRAP x 4'-0" LENGTH o/ ROOF PLYWOOD @ 6'-0"oc MAX SPACING (PERPENDICULAR TO RIDGE JOINING OPPOSITE RAFTERS).

STRUCTURAL SHEATHING

1. ALL STRUCTURAL SHEATHING SHALL BE RATED APA RATED EXPOSURE 1 PLYWOOD UNLESS OTHERWISE NOTED ON THESE DRAWINGS. OSB SHALL NOT BE USED UNLESS APPROVED BY THE EOR.
2. ALL EXTERIOR WALLS, WHETHER COVERED WITH FINISHES OR NOT, SHALL BE FIRST COVERED WITH PLYWOOD AND NAILED WITH A MINIMUM OF 10d NAILS @ 6" oc ALONG ALL EDGES AND 12" oc FIELD NAILING.
3. ALL PLYWOOD SHALL BE INSTALLED WITH SHEETS CENTERED ACCURATELY OVER SUPPORTING MEMBERS. UNLESS OTHERWISE NOTED ON THESE DRAWINGS, LAY GRAIN PERPENDICULAR TO SUPPORTS WITH END JOINTS STAGGERED A MINIMUM OF 24".
4. MINIMUM WIDTH OF ALL PLYWOOD SHALL BE 2'-0" UNLESS IT IS SUPPORTED & NAILED ON ALL EDGES.
5. USE 3x4 FLAT BLOCKING AT UNSUPPORTED EDGES WHERE BLOCKING IS INDICATED ON THESE DRAWINGS.
6. PROVIDE TONGUE & GROOVE ENDS OR PANEL EDGE CLIPS (ONE MIDWAY BETWEEN EACH JOIST) AT UNSUPPORTED EDGES

SPECIAL INSPECTIONS

1. SPECIAL INSPECTIONS SHALL BE COMPLETED IN CONFORMANCE WITH SECTION 1704 & 1705 OF THE 2022 CBC AND THE APPROVED SPECIAL INSPECTION AGREEMENT, WHERE SUCH AN AGREEMENT IS REQUIRED BY THE BUILDING DEPARTMENT.
2. THE CONTRACTOR SHALL NOTIFY THE SPECIAL INSPECTION AGENCY A MINIMUM OF 48 HOURS PRIOR TO ANY REQUESTED SPECIAL INSPECTIONS.

AT A MINIMUM, THE FOLLOWING WORK SHALL BE SUBJECTED TO SPECIAL INSPECTION BY AN OUTSIDE, THIRD-PARTY, SPECIAL INSPECTION TESTING AGENCY EMPLOYED BY THE OWNER OR THEIR REPRESENTATIVE:
- CAST-IN-PLACE AND POST-INSTALLED BOLTS INSTALLED IN CONCRETE (EPOXY, TITEN HD, EXPANSION, ETC.)
- REBAR PLACEMENT BEFORE EACH POUR
- STRUCTURAL STEEL WELDING AND HIGH STRENGTH BOLTS
- SHEARWALL NAILING AND HOLDOWNS
- FOUNDATION EXCAVATION BY GEOTECH
- SUBGRADE/PAD GRADE PREPARATION BY GEOTECH

STRUCTURAL OBSERVATIONS

1. STRUCTURAL OBSERVATIONS, AS REQUIRED BY SECTION 1704 OF THE 2022 CBC, ARE REQUIRED FOR THIS PROJECT. THESE OBSERVATIONS ARE SEPARATE FROM ANY REQUIRED SPECIAL INSPECTIONS OR BUILDING DEPARTMENT INSPECTION REQUIREMENTS.
2. THE PURPOSE OF THE STRUCTURAL OBSERVATIONS ARE TO REVIEW THE OVERALL PROGRESS OF THE JOB AND TO REVIEW THAT GENERAL STRUCTURAL INTENT OF THESE DRAWINGS IS BEING EXECUTED. A VISUAL OBSERVATION OF THE STRUCTURAL SYSTEM FOR GENERAL CONFORMANCE WITH THESE DRAWINGS WILL BE COMPLETED.
3. THE CONTRACTOR SHALL NOTIFY BKG A MINIMUM OF 48 HOURS PRIOR TO THE TIME OF ANY REQUESTED STRUCTURAL OBSERVATIONS.

AT A MINIMUM, THE FOLLOWING STRUCTURAL OBSERVATIONS SHALL BE COMPLETED FOR THIS PROJECT:
- FOUNDATION CONCRETE REINFORCING FOR EACH UNIQUE POUR, UNLESS OTHERWISE APPROVED BY EOR
- ROUGH FRAMING, SHEARWALLS, AND FRAMING HARDWARE
- WHERE OTHERWISE REQUIRED BY THE BUILDING OFFICIAL OR THE BUILDING OWNER.

BKG STRUCTURAL ENGINEERS
a California corporation
1600 El Camino Real, Unit C
San Carlos, CA 94070 650.489.9224

Project Title:
Carmel Serwin Residence

Project Address:
24 Tehama
Carmel, CA 93923

Stamp:



Revisions:

No.	Date	Description

Issue Date: 01/30/2025
BKG Project No.: 24187
Scale: AS NOTED
Drawn By: JW
Sheet Title: General Notes

S0.0

PRE-MANUFACTURERED TRUSSES

1. THE TRUSS MANUFACTURER SHALL BE RESPONSIBLE FOR PROVIDING ENGINEERED SHOP DRAWINGS FOR THE LAYOUT, CONFIGURATION, AND INSTALLATION OF ALL TRUSSES. THE SHOP DRAWINGS SHALL HAVE ALL INFORMATION REQUIRED FOR INDEPENDENT REVIEW AND CONFIRMATION OF TRUSS DESIGNS AND SHALL MEET OR EXCEED THE MINIMUM REQUIREMENTS OF THE 2022 CALIFORNIA BUILDING CODE. THE ENGINEERED SHOP DRAWINGS SHALL BE SUBMITTED TO THE BUILDING DEPARTMENT HAVING JURISDICTION OVER THE PROJECT FOR APPROVAL. ALL FEES ASSOCIATED WITH OBTAINING THE APPROVAL OF THE ENGINEERED SHOP DRAWINGS SHALL BE THE RESPONSIBILITY OF THE CONTRACTOR.
2. PRIOR TO SUBMITTAL OF THE ENGINEERED SHOP DRAWINGS TO THE BUILDING DEPARTMENT THE PLANS AND CALCULATIONS SHALL BE SUBMITTED TO THE ARCHITECT AND ENGINEER OF RECORD FOR REVIEW OF COMPLIANCE WITH THE GENERAL DESIGN INTENT OF THE PROJECT. CHANGES REQUIRED BY THE ENGINEER OF RECORD, BUILDING DEPARTMENT AND ARCHITECT SHALL BE INCORPORATED INTO THE TRUSS DESIGN WITHOUT ADDITIONAL EXPENSE TO THE OWNER. UNDER NO CIRCUMSTANCE SHALL TRUSSES BE FABRICATED OR INSTALLED PRIOR TO THE WRITTEN APPROVAL OF THE BUILDING DEPARTMENT, ENGINEER AND ARCHITECT.
3. THE ENGINEERED SHOP DRAWINGS AND SUBSTANTIATING STRUCTURAL CALCULATIONS SHALL BE PREPARED UNDER THE DIRECT SUPERVISION OF A LICENSED PROFESSIONAL ENGINEER IN THE STATE OF CALIFORNIA. THE ENGINEER WILL PLACE HIS SIGNATURE AND SEAL ON ALL TRUSS DRAWINGS AND CALCULATIONS.
4. THE PLANS INDICATE WHICH TRUSSES ARE REQUIRED TO RESIST AXIAL COMPRESSION AND TENSION FORCES ASSOCIATED WITH LATERAL LOADS GENERATED BY WIND OR EARTHQUAKE FORCES. THESE SPECIAL TRUSSES ARE DESIGNATED AS 'DRAG TRUSSES' ON THE PLANS AND HAVE THE MINIMUM AXIAL FORCES INDICATED.

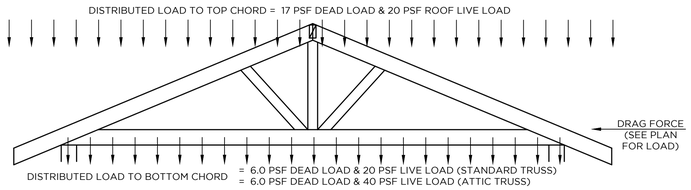

DEFLECTIONS OF ROOF TRUSSES SHALL BE LIMITED TO
L/360 LIVE LOAD & L/240 TOTAL LOAD

BKG
STRUCTURAL
ENGINEERS

a California corporation
1600 El Camino Real, Unit C
San Carlos, CA 94070 650.489.9224

Project Title:
Carmel Serwin
Residence

Project Address:
24 Tehama
Carmel, CA 93923

Stamp:



Revisions:

No.	Date	Description

Issue Date:
01/30/2025
BKG Project No.:
24187
Scale:
AS NOTED
Drawn By:
JW
Sheet Title:
General Notes

S0.0

REINFORCEMENT LAP SPLICES f'c = 2,500 PSI									
REINF LOCATION	REINFORCEMENT SIZE (ALL LENGTHS IN INCHES)								
	#3	#4	#5	#6	#7	#8	#9	#10	#11
TOP*	31	41	51	61	89	102	115	129	143
OTHER	24	32	39	47	69	78	88	100	110

*TOP BAR REFERS TO HORIZONTAL REINFORCEMENT SUCH THAT MORE THAN 12" OF FRESH CONCRETE IS CAST BELOW THE SPLICE.
TABLE ASSUMES MINIMUM CLEAR COVER OF $1d_b$ AND MINIMUM CLEAR SPACING OF $2d_b$. IF THESE LIMITS ARE NOT MET MULTIPLY SPLICE LENGTHS IN TABLE BY 1.5

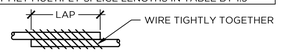

1 REBAR SPLICE LENGTH

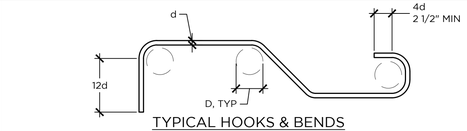

TYPICAL HOOKS & BENDS

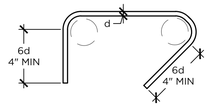

TIES & STIRRUPS

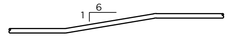

MAX BAR OFFSET

MAIN REINFORCING BARS	D = 6d FOR #3 TO #8 BARS
	D = 8d FOR #9 TO #11 BARS
TIES & STIRRUPS	D = 1 1/2" FOR #3 BARS
	D = 2" FOR #4 BARS
	D = 2 1/2" FOR #5 BARS

2 REBAR HOOKS & BENDS

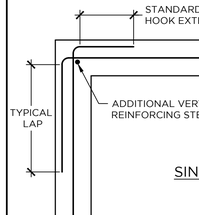

SINGLE CURTAIN

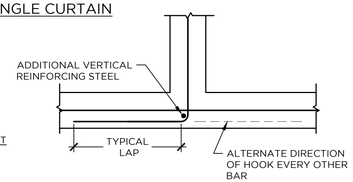

NOTE: TYPICAL VERTICAL REINFORCING STEEL NOT SHOWN FOR CLARITY

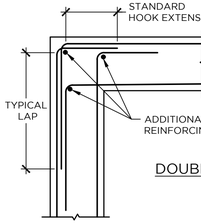

DOUBLE CURTAIN

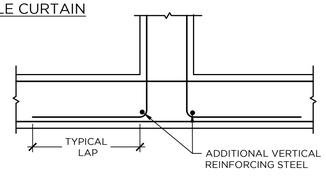

3 CONCRETE WALL / FOOTING REINFORCEMENT AT CORNERS & INTERSECTIONS

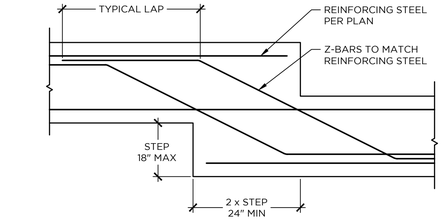

NOTE: WHERE SLOPE OF BOTTOM OF FOOTING EXCEEDS 10:1 (HORIZONTAL TO VERTICAL) THE FOOTING SHALL BE STEPPED

4 STEPPED FOOTING

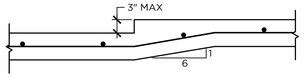

SMALL DEPRESSIONS (LESS THAN 3")

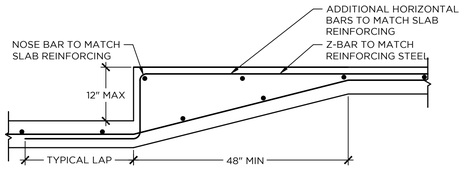

MODERATE DEPRESSIONS (LESS THAN 12")

5 SLAB ON GRADE DEPRESSIONS

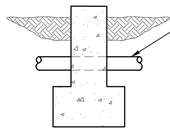

PIPE THROUGH FOOTING

NOTE: ALL PENETRATIONS MUST OCCUR PERPENDICULAR TO FOOTING

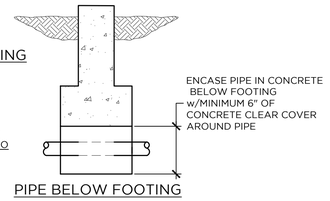

PIPE BELOW FOOTING

6 FOOTING PENETRATIONS

NOTE: TRENCH SHALL BE BACKFILLED w/COMPACTED FILL FOLLOWING ALL REQUIREMENTS SHOWN ON CIVIL DRAWINGS AND/OR GEOTECHNICAL REPORT

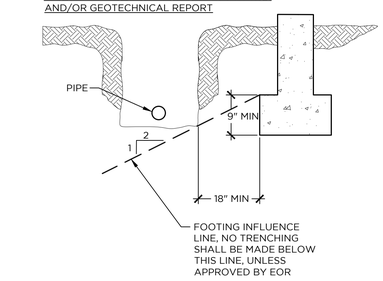

7 TRENCHES ADJACENT TO FOOTING

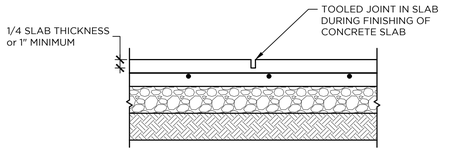

NOTES:
1) CONTRACTOR SHALL COORDINATE LOCATIONS OF CONTROL JOINTS w/ARCH & EOR PRIOR TO PLACEMENT OF CONCRETE
2) CONTRACTOR SHALL SPACE CONTROL JOINTS UP TO A MAXIMUM OF 10'-0" oc, FORMING RECTANGLES w/MAXIMUM ASPECT RATIOS OF 1.5:1 (OPTIMUM 1:1)

8 SLAB ON GRADE CONTROL JOINTS

9 NOT USED

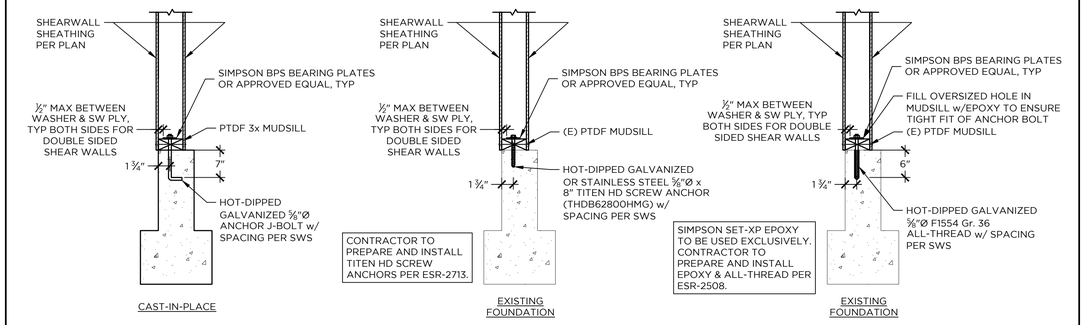

CAST-IN-PLACE | EXISTING FOUNDATION | EXISTING FOUNDATION

10 MUDSILL ANCHORAGE OPTIONS

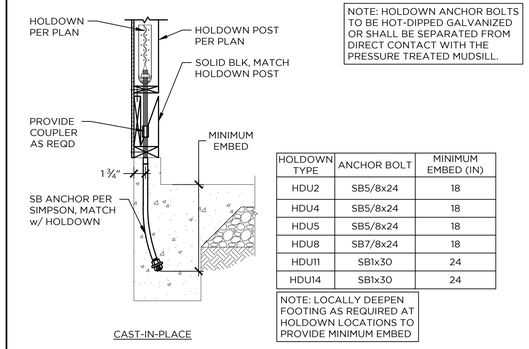

NOTE: HOLDOWN ANCHOR BOLTS TO BE HOT-DIPPED GALVANIZED OR SHALL BE SEPARATED FROM DIRECT CONTACT WITH THE PRESSURE TREATED MUDSILL.

HOLDOWN TYPE	ANCHOR BOLT	MINIMUM EMBED (IN)
HDU2	SB5/8x24	18
HDU4	SB5/8x24	18
HDU5	SB5/8x24	18
HDU8	SB7/8x24	18
HDU11	SB1x30	24
HDU14	SB1x30	24

NOTE: LOCALLY DEEPEN FOOTING AS REQUIRED AT HOLDOWN LOCATIONS TO PROVIDE MINIMUM EMBED

CAST-IN-PLACE

11a HOLDOWN TO (N) FOUNDATION

11b NOT USED

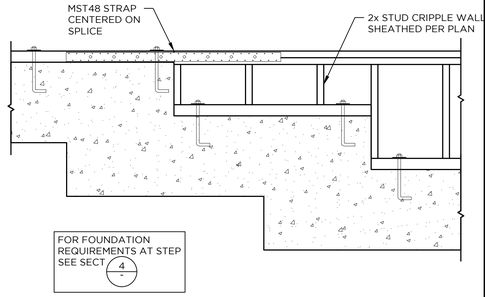

12 STEPS IN WALL BOTTOM PLATE

13 NOT USED

BKG
STRUCTURAL ENGINEERS
a California corporation
1600 El Camino Real, Unit C
San Carlos, CA 94070 650.489.9224

Project Title:
Carmel Serwin Residence

Project Address:
24 Tehama
Carmel, CA 93923

Stamp:



Revisions:

No.	Date	Description

Issue Date: 01/30/2025
BKG Project No.: 24187
Scale: AS NOTED
Drawn By: JW
Sheet Title: Typical Concrete Details

S1.0

TABLE 2304.10.2		
CONNECTION	NUMBER & TYPE OF FASTENER	SPACING & LOCATION
	ROOF	
Blocking between ceiling joists, rafters or trusses to top plate or other framing below	3 - 8d common (2 1/2" × 0.131") 3 - 10d box (3" x 0.128") 3 - 3" x 0.131" nails 3 - 3" 14 gage staples	each end, toenail
Blocking between rafters or truss not at the wall top plate, to rafter or truss	2 - 8d common (2 1/2" × 0.131") 2 - 3" x 0.131" nails 2 - 3" 14 gage staples	each end, toenail
	2 - 16d common (3 1/2" × 0.162") 2 - 3" x 0.131" nails 3 - 3" 14 gage staples	end nail
Flat blocking to truss and web filler	16d common (3 1/2" x 0.162") @ 6" oc 3" x 0.131" nails @ 6" oc 3" x 14 gage staples @ 6" oc	face nail
Ceiling joist to top plate	3 - 8d common (2 1/2" x 0.131") 3 - 10d box (3" x 0.128") 3 - 3" x 0.131" nails 3 - 3" 14 gage staples	each joist, toe nail
Ceiling joist not attached to parallel rafter, laps over partitions (no thrust) (see Section 2308.7.3.1, Table 2308.7.3.1)	3 - 16d common (3 1/2" x 0.162") 4 - 10d box (3" x 0.128") 4 - 3" x 0.131" nails 4 - 3" 14 gage staples	face nail
Ceiling joist attached to parallel rafter (heel joint) (See Section 2308.7.3.1, Table 2308.7.3.1)	Per Table 2308.7.3.1	face nail
Collar tie to rafter	3 - 10d common (3" x 0.148") 4 - 10d box (3" x 0.128") 4 - 3" x 0.131" nails 4 - 3" 14 gage staples	face nail
Rafter or roof truss to top plate (See Section 2308.7.5, Table 2308.7.5)	3 - 10d common (3" x 0.148") 3 - 16d box (3 1/2" x 0.135") 4 - 10d box (3" x 0.128") 4 - 3" x 0.131 nails 4 - 3" 14 gage staples	toenail
Roof rafters to ridge valley or hip rafters; or roof rafter to 2 inch ridge beam	2 - 16d common (3 1/2" x 0.162") 3 - 10d box (3" x 0.128") 3 - 3" x 0.131" nails 3 - 3" 14 gage staples	end nail
	3 - 10d common (3" x 0.148") 4 - 16d box (3 1/2" X 0.135") 4 - 10d box (3" x 0.128") 4 - 3" x 0.131" nails 4 - 3" 14 gage staples	toenail
	WALL	
Stud to stud (not at braced wall panels)	16d common (3 1/2" x 0.162")	24" oc face nail
	10d box (3" x 0.128") 3" x 0.131" nails 3 - 3" 14 gage staples	16" oc face nail
Stud to stud and abutting studs at intersecting wall corners	16d common (3 1/2" x 0.162")	16" oc face nail
	16d box (3 1/2" x 0.162")	12" oc face nail
	3" x 0.131" nails 3 - 3" 14 gage staples	12" oc face nail
Built-up header (2" to 2" header)	16d common (3 1/2" x 0.162")	16" oc each edge, face nail
	16d box (3 1/2" x 0.135")	12" oc each edge, face nail
Continuous header to stud	4 - 8d common (2 1/2" x 0.131") 4 - 10d box (3" x 0.128")	toenail
Top plate to top plate	16d common (3 1/2" x 0.162")	16" oc face nail
	10d box (3" x 0.128") 3" x 0.131" nails 3" 14 gage staples	12" oc face nail
Top plate to top plate, at end joints	8 - 16d common (3 1/2" x 0.162") 12 - 10d box (3" x 0.128") 12 - 3" x 0.131" nails 12 - 3" 14 gage staples	each side of end joint, face nail (minimum 24" lap splice length each side of end joint)
Bottom plate to joist, rim joist, band joist or blocking (not at braced wall panels)	16d common (3 1/2" x 0.162")	16" oc face nail
	16d box (3 1/2" x 0.135") 3" x 0.131" nails 3" 14 gage staples	12" oc face nail
Bottom plate to joist, rim joist, band joist or blocking at braced wall panels	2 - 16d common (3 1/2" x 0.162") 3 - 16d box (3 1/2" X 0.135") 4 - 3" x 0.131" nails 4 - 3" 14 gage staples	16" oc face nail
Stud to top or bottom plate	4 - 8d common (2 1/2" x 0.131") 4 - 10d box (3" x 0.128") 4 - 3" x 0.131" nails 4 - 3" 14 gage staples	toenail
	2 - 16d common (3 1/2" x 0.162") 3 - 10d box (3" x 0.128") 3 - 3" x 0.131" nails 3 - 3" 14 gage staples	face nail
Top plates, lap at corners and intersections	2 - 16d common (3 1/2" x 0.162") 3 - 10d box (3" x 0.128") 3 - 3" x 0.131" nails 3 - 3" 14 gage staples	face nail
1" brace to each stud and plate	2 - 8d common (2 1/2" x 0.131") 2 - 10d box (3" x 0.128") 2 - 3" x 0.131" nails 2 - 3" 14 gage staples	face nail
1" x 6" sheathing to each bearing	2 - 8d common (2 1/2" X 0.131") 2 - 10d box (3" x 0.128")	face nail
1" x 8" and wider sheathing to each bearing	3 - 8d common (2 1/2 x 0.131") 3 - 10d box (3" x 0.128")	face nail
	FLOOR	
Joist to sill, top plate or girder	3 - 8d common (2 1/2" x 0.131") 3 - 10d box (3" x 0.128") 3 - 3" x 0.131" nails 3 - 3" 14 gage staples	toenail
Rim joist, band joist, or blocking to top plate, sill or other framing below	8d common (2 1/2" x 0.131") 10d box (3" x 0.128") 3" x 0.131" nails 3" 14 gage staples	6" oc, toenail
1" x 6" subfloor or less to each joist	2 - 8d common (2 1/2" x 0.131") 2 - 10d box (3" x 0.128")	face nail
2" subfloor to joist or girder	2 - 16d common (3 1/2" X 0.162")	face nail
2" planks (plank & beam - floor & roof)	2 - 16d common (3 1/2" X 0.162")	face nail
Built-up girders and beams, 2" lumber layers	20d common (4" x 0.192")	32" oc, face nail at top and bottom staggered on opposite sides
	10d box (3" x 0.128") 3" x 0.131" nails 3" 14 gage staples	24" oc, face nail at top and bottom staggered on opposite sides
	And: 2 - 20d common (4" x 0.192") 3 - 10d box (3" x 0.128") 3 - 3" x 0.131" nails 3 - 3" 14 gage staples	ends at each splice, face nail
Ledger strip supporting joists or rafters	3 - 16d common (3 1/2" x 0.162") 4 - 10d box (3" x 0.128") 4 - 3" x 0.131" nails 4 - 3" 14 gage staples	each joist or rafter, face nail
Joist to band joist or rim joist	3 - 16d common (3 1/2" x 0.162") 4 - 10d box (3" x 0.128") 4 - 3" x 0.131" nails 4 - 3" 14 gage staples	end nail
Bridging or blocking to joist, rafter or truss	2 - 8d common (2 1/2" x 0.131") 2 - 10d box (3" x 0.128") 2 - 3" x 0.131" nails 2 - 3" 14 gage staples	each end, toenail

NOTE: BKG DETAILS & NOTES SUPERSEDE CONVENTIONAL FRAMING FASTENING SCHEDULE.

1 FASTENING SCHEDULE

NOTES
1. ALL STRAPS SHALL BE INSTALLED PER MANUFACTURE'S SPECIFICATIONS.
2. FOR COIL STRAPS, SEE PLAN FOR LENGTH.
3. DEVELOPMENT LENGTHS PER MANUFACTURE.
4. SEE PLAN FOR INSTALLATION TYPE; RIDGE, PRE-NAILED, ETC.

STRAP SCHEDULE		
STRAP	MIN. FRAMING	CLIPS (WHERE REQ'D)
CS16	2x	(3)-A35
CMSTC16	(2)-2x	(10)-A35
CMST14	4x	(15)-A35
CMST12	4x	(20)-A35
MSTA36	2x	(5)-A35
MST48	(2)-2x	(12)-A35
MST60	4x	(15)-A35
MST72	4x	(15)-A35

CONTRACTOR MAY USE LTP4 CLIPS IN LIEU OF A35 CLIPS, SAME AMOUNT TO BE USED

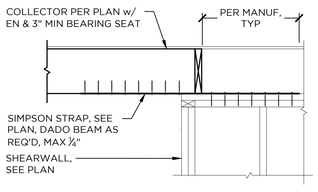

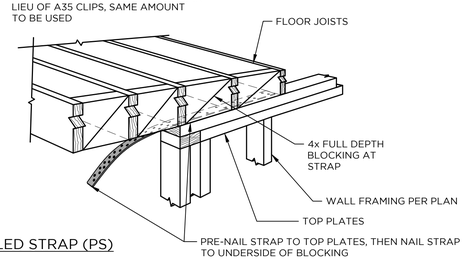

PRE-NAILED STRAP (PS)

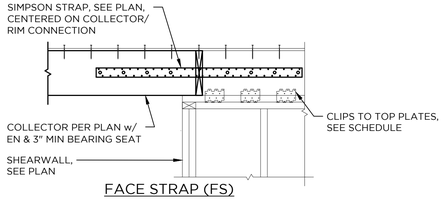

FACE STRAP (FS)

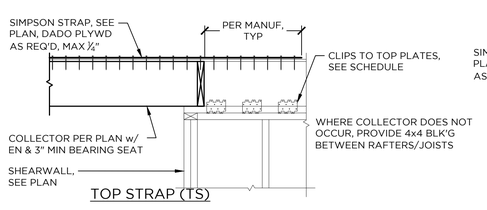

TOP STRAP (TS)

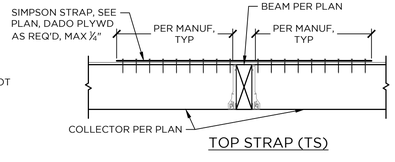

TOP STRAP (TS)

8 TYPICAL STRAPS / COLLECTORS

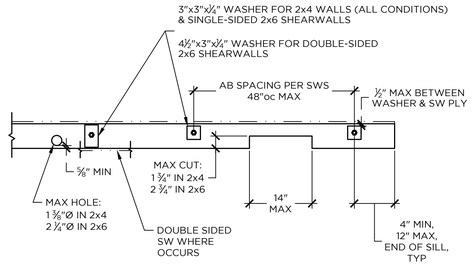

2 MUDSILL ANCHORAGE & ALLOWABLE CUTS

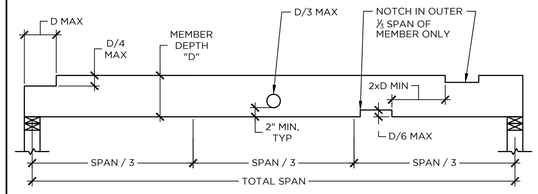

NOTES:
1) DO NOT BORE HOLES IN 4x AND LARGER BEAMS WITHOUT STRUCTURAL ENGINEERS APPROVAL
2) THIS DETAIL DOESN'T APPLY TO MANUFACTURED LUMBER (PSL, LSL, LVL, ETC)
3) THIS DETAIL DOESN'T APPLY TO MANUFACTURED JOISTS (TJI, BCI, ETC)

3 ALLOWABLE RAFTER & JOIST CUTS

NOTE: DO NOT NOTCH OR DRILL STRUCTURAL POSTS WITHOUT APPROVAL FROM STRUCTURAL ENGINEER

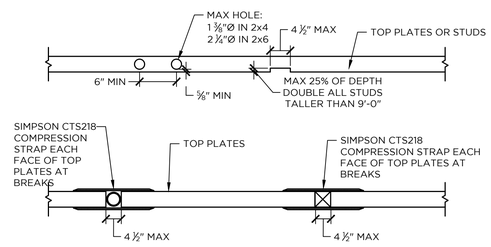

4 ALLOWABLE TOP PLATE & STUD NOTCHES

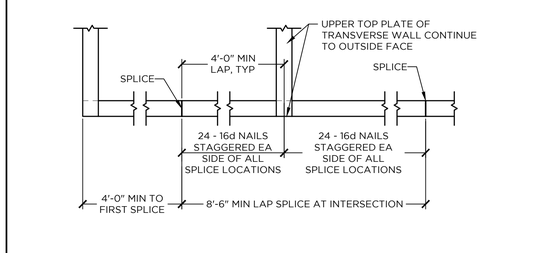

5 PLATE LAP AT CORNERS & INTERSECTIONS

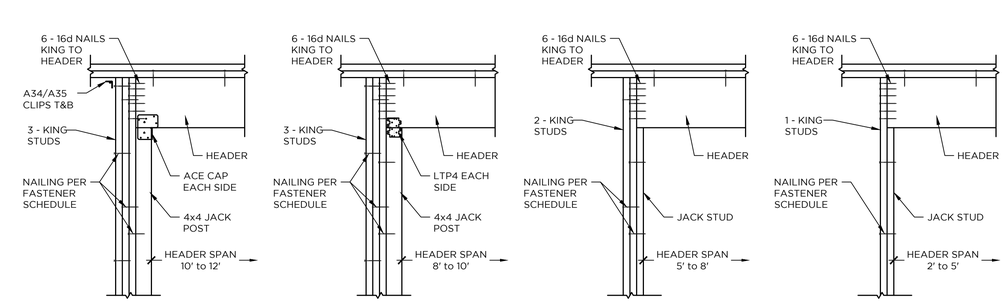

6 HEADER OPENINGS

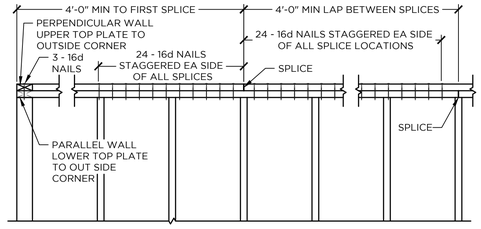

NOTES: 1) WHERE 4'-0" TOP PLATE LAP SPLICE NOT POSSIBLE, OKAY TO USE CS14x36 STRAPS ON EACH FACE OF SPLICES

7 TYPICAL WALL TOP PLATE SPLICE

BKG STRUCTURAL ENGINEERS
a California corporation
1600 El Camino Real, Unit C
San Carlos, CA 94070 650.489.9224

Project Title:
Carmel Serwin Residence

Project Address:
24 Tehama
Carmel, CA 93923

Stamp:

REGISTERED PROFESSIONAL ENGINEER ADAM F. KLEIN S 5941 STRUCTURAL STATE OF CALIFORNIA

Revisions:

No.	Date	Description

Issue Date: 01/30/2025
BKG Project No.: 24187
Scale: AS NOTED
Drawn By: JW
Sheet Title: Typical Wood Details

S1.1

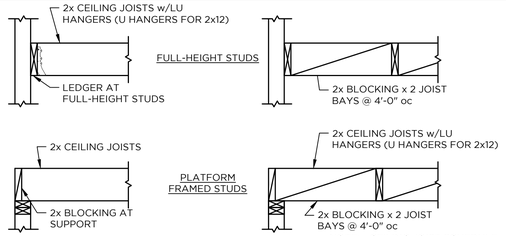

CEILING FRAMING SCHEDULE			
MAX SPAN (FT)	JOIST	MAX SPACING (IN)	LEDGER NAILER
6	2x4	24" oc	2-16d/STUD
10	2x6	24" oc	3-16d/STUD
13	2x8	24" oc	4-16d/STUD
15	2x10	24" oc	4-16d/STUD
17	2x12	24" oc	5-16d/STUD

NOTE: CEILING JOIST SCHEDULE DOES NOT APPLY TO AREAS OF THE CEILING THAT WILL BE USED FOR STORAGE.

NOTE: CEILING JOISTS SHALL BE BRACED AT 6'-0" oc MAX SPACING BY FULL-HEIGHT PERPENDICULAR BLOCKING OR OTHER MEANS

1 CEILING JOIST SCHEDULE

ALLOWABLE EXTERIOR WALL STUD HEIGHTS @ SPACING	
LATERALLY UNSUPPORTED STUD HEIGHT (FEET)	TYPICAL EXTERIOR WALL
9'-0"	2x4 @ 16" oc, 2x6 @ 16" oc
11'-0"	3x4 @ 16" oc, 2x6 @ 16" oc
12'-0"	3x4 @ 12" oc, 2x6 @ 16" oc
15'-0"	2x6 @ 16" oc

NOTE: POINTS OF LATERAL SUPPORT ARE CONSIDERED TO BE PERPENDICULAR FLOOR JOISTS, CEILING JOISTS, ROOF RAFTERS, AND BLOCKING. ALLOWABLE HEIGHT TABLE ASSUMES THAT WALL FRAMING IS BRACED ON BOTH SIDES BY MINIMUM 3/8" STRUCTURAL SHEATHING OR 1/2" GYPSUM WALLBOARD. WHERE BRACING DOES NOT OCCUR ON BOTH SIDES OF THE WALL STUD THIS TABLE IS NOT VALID.

ALL INTERIOR WALLS SHALL BE FRAMED WITH MINIMUM 2x4 STUDS @ 16" oc. SEE ARCHITECTURAL DRAWINGS & STRUCTURAL FRAMING PLANS WHERE LARGER WALLS ARE REQUIRED

2 WALL STUD HEIGHTS & SPACING

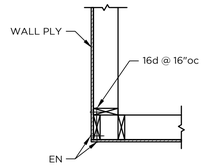

TYPICAL CORNER

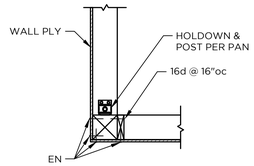

CORNER w/ HOLDOWN

3 PLYWOOD AT WALL CORNERS

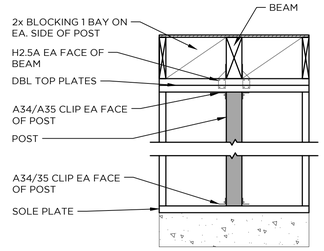

4 TYPICAL POST CONNECTION

SHEARWALL SCHEDULE						
SYMBOL	EDGE NAIL SPACING	APA RATED SHEATHING EXPOSURE 1	SHEAR TRANSFER		SHEATHING LAP STUD/BLKG SIZE	⅝"Ø ANCHOR BOLTS 3x MUDSILL
			FRAMING CLIPS	SOLE PLATE		
6	10d @ 6"oc	15/32"	A35 or LTP4 @ 16"oc	SDS25600 @ 12"oc	2x STUD/BLKG	48"oc
4	10d @ 4"oc	15/32"	A35 or LTP4 @ 10"oc	SDS25600 @ 8"oc	2x STUD/BLKG	42"oc
3*	10d @ 3"oc	15/32"	A35 or LTP4 @ 8"oc	SDS25600 @ 6"oc	3x STUD/BLKG	32"oc
2*	10d @ 2"oc	15/32"	A35 or LTP4 @ 6"oc	SDS25600 @ 4"oc	3x STUD/BLKG	24"oc
D*	10d @ 2"oc EACH FACE	15/32" EACH FACE	(2)-A35 or LTP4 @ 6"oc	SDS25600 @ 3"oc	3x STUD/BLKG	12"oc

* 1/8" MINIMUM STAGGERED NAILING AT ALL PANEL EDGES ARE REQUIRED

5 SHEARWALL SCHEDULE

HANGER SCHEDULE		
MEMBER	FACE MOUNT	TOP FLANGE
2x6	LU26	JB26
2x8	LU28	JB28
2x10	LU210	JB210
2x12	LU212	JB212
2x14	LU214	JB214
4x6	HU46	W46
4x8	HU48	BA48
4x10	HU410	BA410
4x12	HU410	BA412
TJI	IUS	ITS
LVL	HU	ITS
(2)-LVL	HU	HWP
(3)-LVL	HU	HWP
PSL	HU	HWP

NOTES:
1) ALL JOIST HANGER DESIGNATIONS ARE SIMPSON STRONG-TIE. SUBSTITUTIONS MAY NOT BE USED UNLESS APPROVED BY EOR.
2) SEE PLAN FOR HANGER CALLOUTS THAT DIFFER FROM SCHEDULE. PLAN CALLOUTS SHALL GOVERN OVER THIS SCHEDULE WHERE CONFLICTS OCCUR.
3) WHERE PRESSURE TREATED WOOD IS USED, HANGERS SHALL HAVE Z-MAX COATING AT A MINIMUM.

6 HANGER SCHEDULE

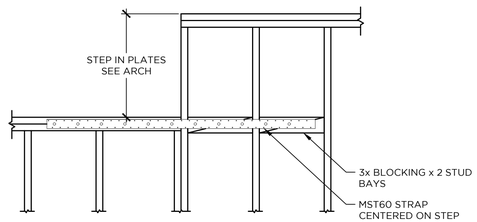

7 STEP IN TOP PLATES

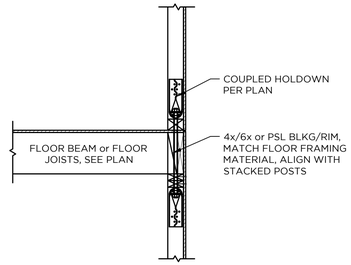

8 COUPLED HOLDOWNS TO CONNECT POSTS

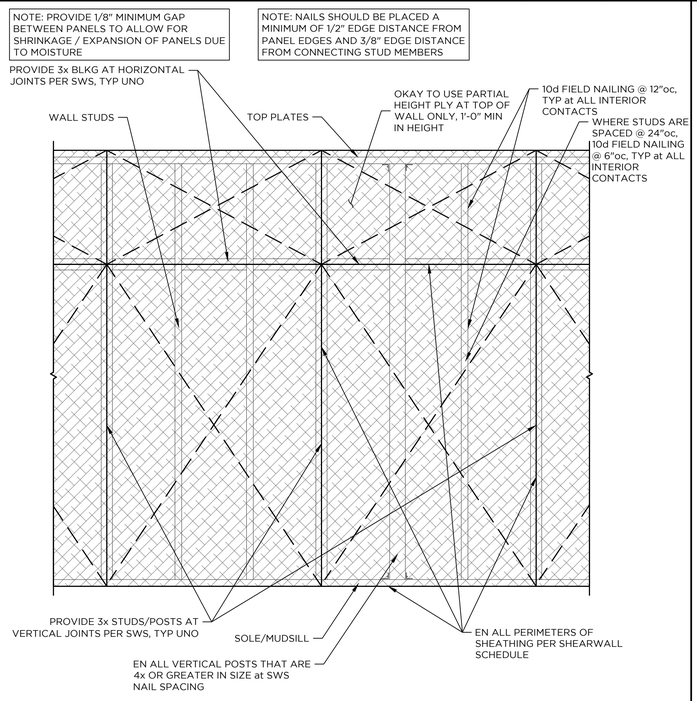

9 SHEATHING ATTACHMENT AT SHEARWALLS

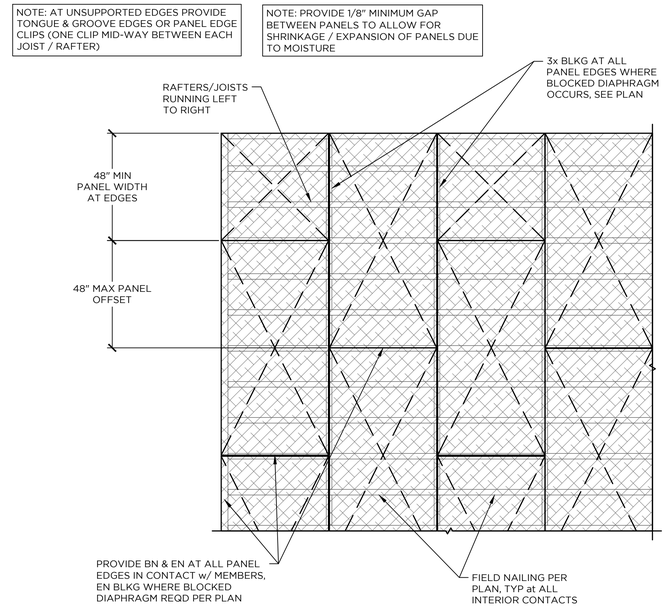

10 SHEATHING ATTACHMENT AT ROOF & FLOOR DIAPHRAGMS

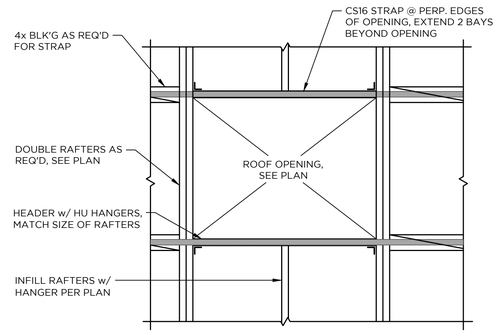

11 SKYLIGHT DETAIL

ALLOWABLE HOLDOWN SUBSTITUTIONS		
HOLDOWN PER PLAN	EQUIVALENT COILED STRAP	EQUIVALENT STRAP TIE
HDU2	CMSTC16 x 24" END	MST48
HDU4	CMSTC16 x 24" END	MST60
HDU5	CMST14 x 32" END	MST72
HDU8	CMST14 x 32" END	MST72
HDU11	CMST12 x 42" END	(2)MST72
HDU14	(2)CMST12 x 42" END	(2)MST72

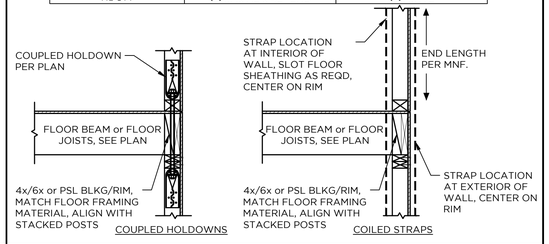

12 HOLDOWN / STRAP SUBSTITUTIONS

BKG STRUCTURAL ENGINEERS
a California corporation
1600 El Camino Real, Unit C
San Carlos, CA 94070 650.489.9224

Project Title:
Carmel Serwin Residence

Project Address:
24 Tehama
Carmel, CA 93923

Stamp:

REGISTERED PROFESSIONAL ENGINEER ADAM F. KLEIN S 5941 STRUCTURAL STATE OF CALIFORNIA

Revisions:

No.	Date	Description

Issue Date: 01/30/2025
BKG Project No.: 24187
Scale: AS NOTED
Drawn By: JW
Sheet Title: Typical Wood Details

S1.2

FOUNDATION LEGEND:

EXCEPTION AS NOTED — 4x POST ABOVE, UNO

EXCEPTION AS NOTED — HSS STEEL COLUMN, TYP UNO

EXCEPTION AS NOTED — DENOTES SIMPSON HANGER PER SCHEDULE, UNO

1 / X'-XX" — SHEARWALL TYPE & MINIMUM LENGTH. SHEARWALL TYPE SHALL BE PER THE SHEARWALL SCHEDULE. LENGTH IS MEASURED FROM OUTSIDE EDGES OF POSTS. ALL SHEARWALLS SHALL EXTEND FULL-HEIGHT TO FLOOR OR ROOF ABOVE.

4x4 HDU2 — POSTSIZE & HOLDOWN (WHERE REQUIRED) SEE DETAIL(S) 11A/S1.0

SIMPSON STRONG-TIE WSWH STRONGWALL, SEE SIMPSON STRONG-TIE TYPICAL DETAIL SHEETS "WSWH2"

WALLS ABOVE FLOOR LEVEL

CONCRETE FOOTING

ROOF LEGEND:

EXCEPTION AS NOTED — POST ABOVE, UNO

EXCEPTION AS NOTED — POST BELOW, UNO

EXCEPTION AS NOTED — HSS 5x5x5/16 STEEL CRIPPLE POST, TYP UNO

EXCEPTION AS NOTED — DENOTES SIMPSON HANGER PER SCHEDULE, UNO

STEEL BEAM PER PLAN

CJP WELDED CONN

SHEARWALL BELOW

EN — COLLECTOR - PROVIDE 2x RAFTER WITH EDGE NAILING FULL LENGTH OF MEMBER

STRAP, SEE PLAN/DETAILS 8/S1.1

WALLS BELOW FLOOR LEVEL

BLOCKED PLYWOOD DIAPHRAGM

CONCRETE SLABS:

1. ALL EXTERIOR CONCRETE SLABS (UNLESS NOTED OTHERWISE ON PLANS) SHALL BE:
   - 5" SLAB ON GRADE w/ #4 BARS @ 16"oc EA WAY CENTERED IN SLAB
   - o/ 12" OF ENGINEERED FILL OR ENTIRELY CUT ON FIRM NATIVE SOIL
   - o/ 8" OF SCARIFIED, MOISTURE CONDITIONED, AND COMPACTED SUBGRADE MATERIAL PER GEOTECH
2. ALL INTERIOR CONCRETE SLABS (UNLESS NOTED OTHERWISE ON PLANS) SHALL BE:
   - 5" SLAB ON GRADE w/ #4 BARS @ 16"oc EA WAY CENTERED IN SLAB
   - o/ 15-MIL STEGOWRAP VAPOR BARRIER BY OTHERS
   - o/ 4" MIN OF A FREE DRAINING GRANULAR MATERIAL MEETING REQUIREMENTS OF CALTRANS CLASS I CLASS A GRADATION
   - o/ 12" OF ENGINEERED FILL OR ENTIRELY CUT ON FIRM NATIVE SOIL
   - o/ 8" OF SCARIFIED, MOISTURE CONDITIONED, AND COMPACTED SUBGRADE MATERIAL PER GEOTECH

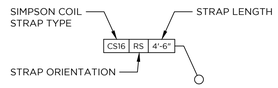

ROOF SHEATHING:

1. ALL ROOF SHEATHING SHALL BE 5/8" APA RATED SHEATHING EXPOSURE 1 (40/20 SPAN RATING) NAILED w/
   - BOUNDARY/SUPPORTED EDGES : 10d @ 6" oc
   - FIELD NAILING: 10d @ 12" oc

BKG STRUCTURAL ENGINEERS

a California corporation
1600 El Camino Real, Unit C
San Carlos, CA 94070 650.489.9224

Project Title:
Carmel Serwin Residence

Project Address:
24 Tehama
Carmel, CA 93923

Stamp:

REGISTERED PROFESSIONAL ENGINEER — ADAM F. KLEIN — S 5941 — STRUCTURAL — STATE OF CALIFORNIA

Revisions:

No.	Date	Description

Issue Date: 01/30/2025
BKG Project No.: 24187
Scale: AS NOTED
Drawn By: JW
Sheet Title: Plan Notes & Legend

S1.3

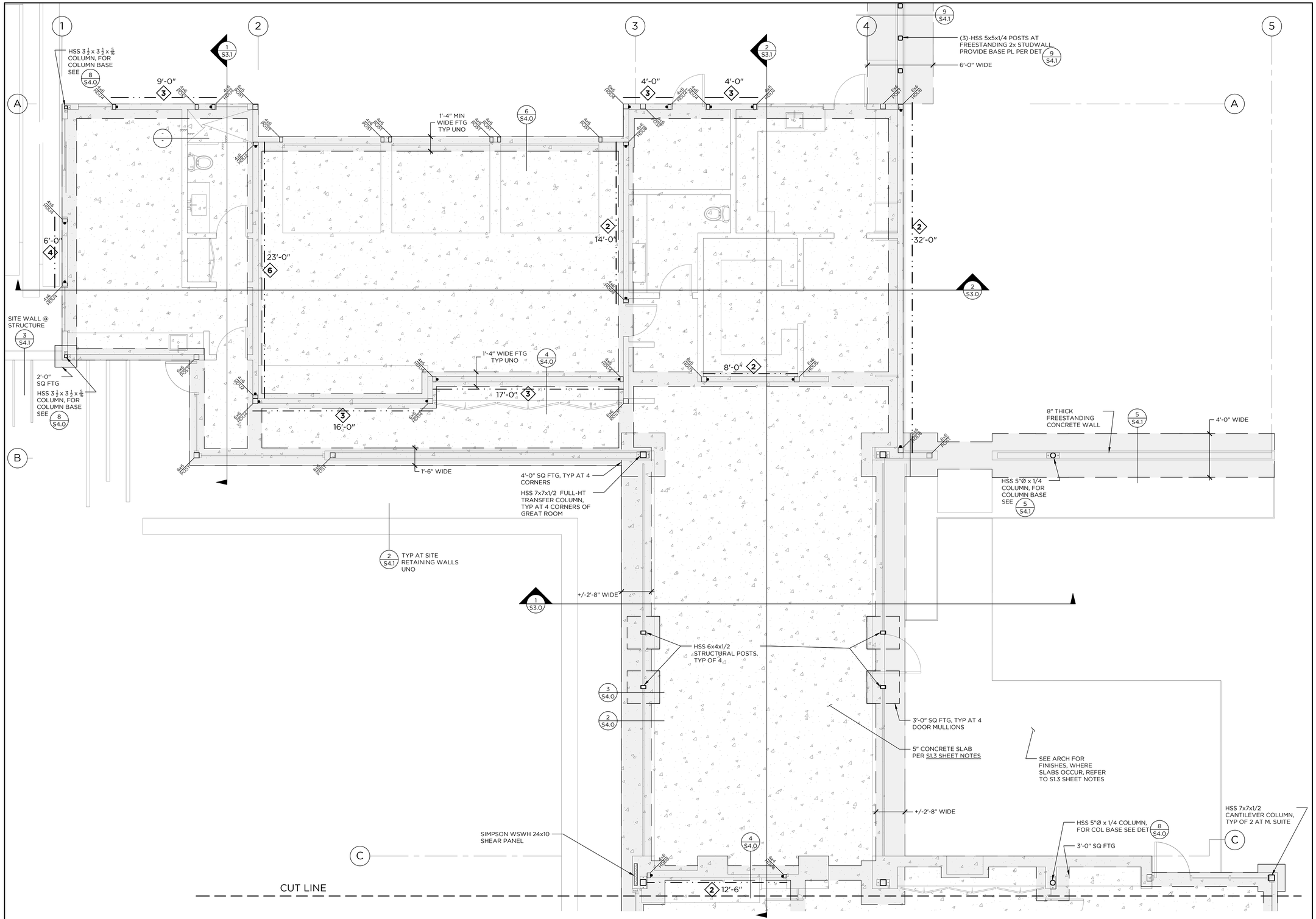

FOUNDATION PLAN

SCALE: 1/4" = 1'-0"

S2.1A

BKG
STRUCTURAL ENGINEERS

a California corporation
1600 El Camino Real, Unit C
San Carlos, CA 94070 650.489.9224

Project Title:
Carmel Serwin Residence

Project Address:
24 Tehama
Carmel, CA 93923

Stamp:

REGISTERED PROFESSIONAL ENGINEER
ADAM F. KLEIN
S 5941
STRUCTURAL
STATE OF CALIFORNIA

Revisions:

No.	Date	Description

Issue Date: 01/30/2025
BKG Project No.: 24187
Scale: AS NOTED
Drawn By: JW
Sheet Title: Foundation Plan

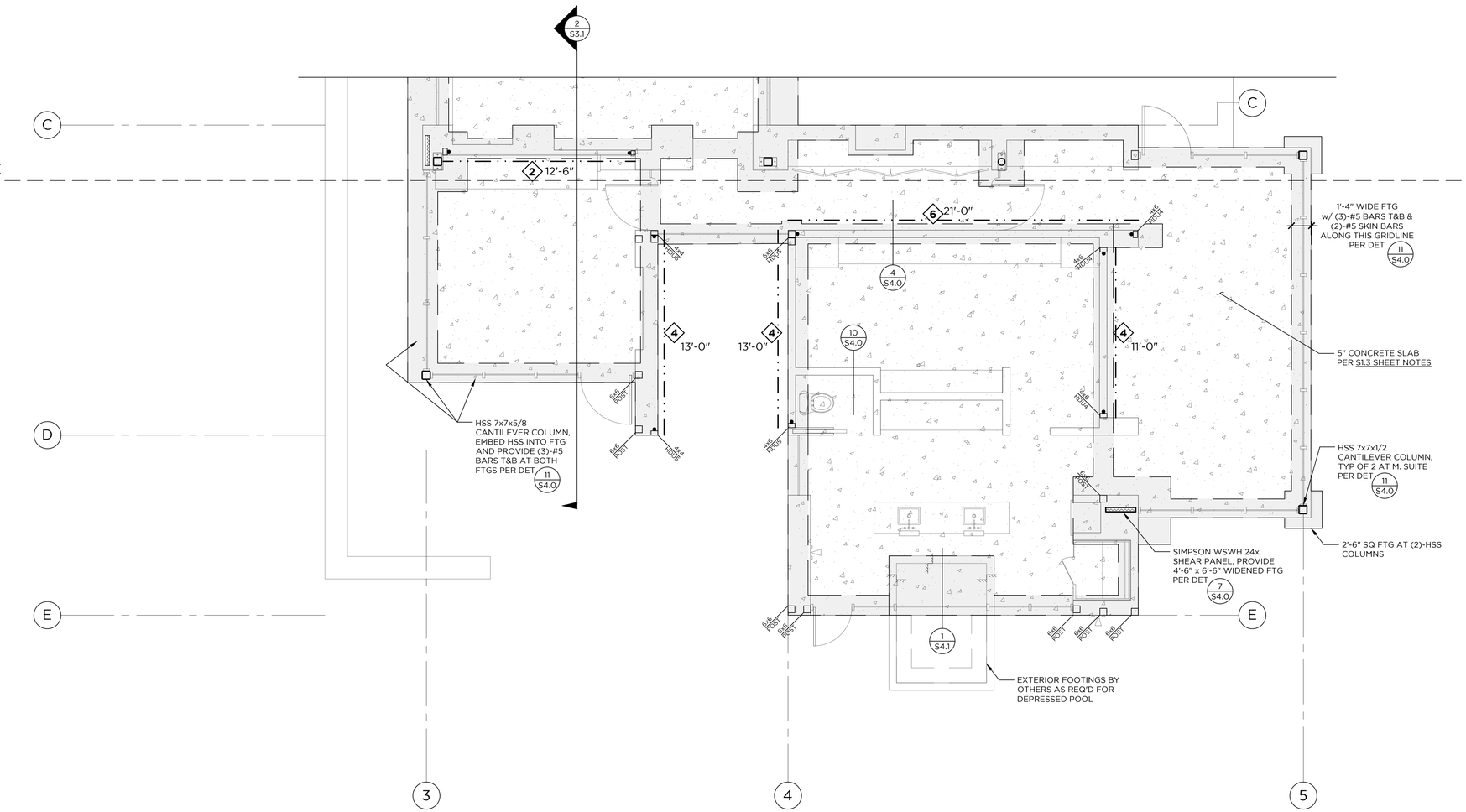
2
S3.1
C
CUT LINE
2 12'-6"
6 21'-0"
4x6 POST
4x6 POST
4x4 POST
4x6 POST
4x6 POST
4x6

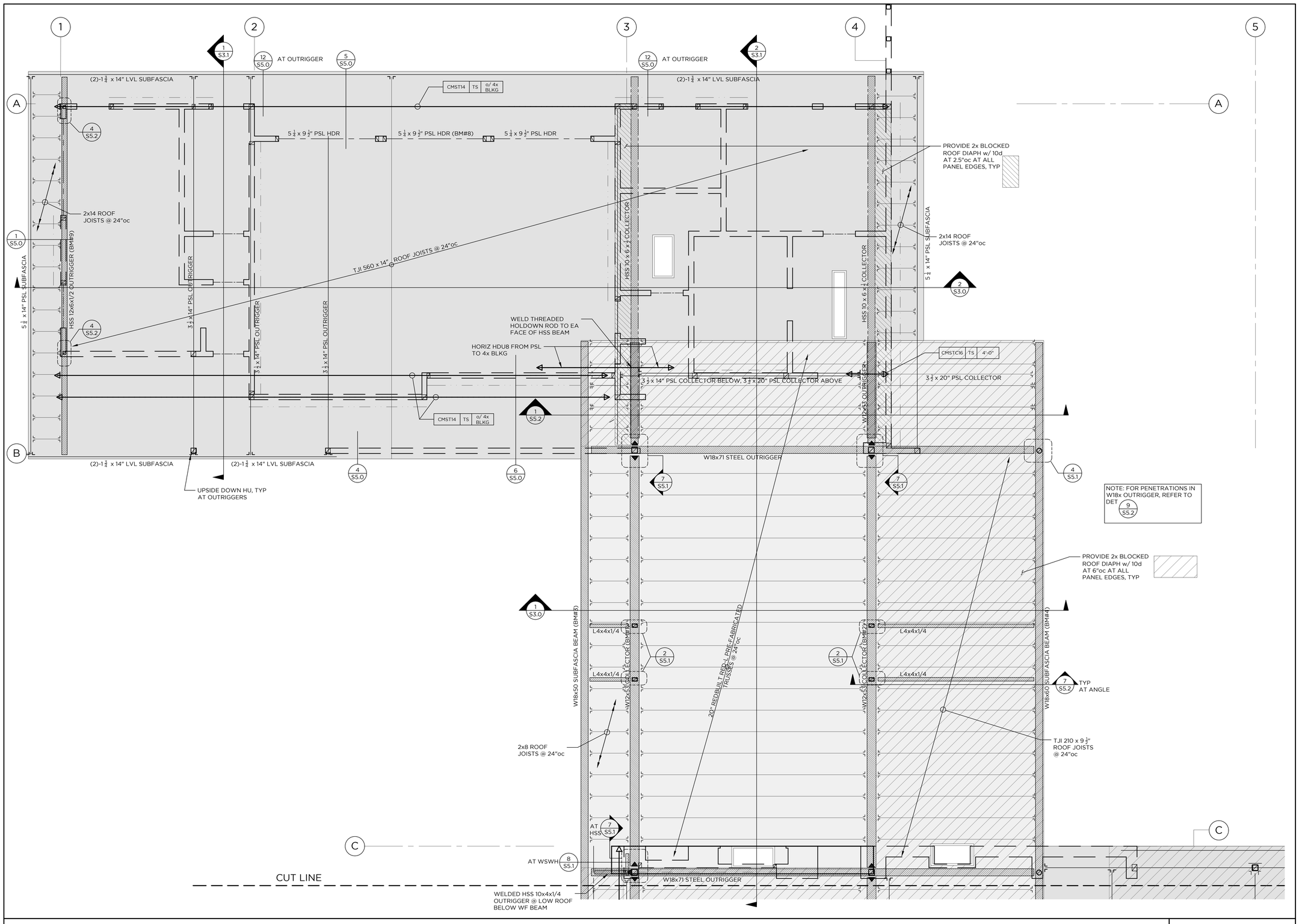

ROOF FRAMING PLAN

SCALE: 1/4" = 1'-0"

S2.2A

BKG STRUCTURAL ENGINEERS

a California corporation
1600 El Camino Real, Unit C
San Carlos, CA 94070 650.489.9224

Project Title:
Carmel Serwin Residence

Project Address:
24 Tehama
Carmel, CA 93923

Stamp:

REGISTERED PROFESSIONAL ENGINEER ADAM F. KLEIN S 5941 STRUCTURAL STATE OF CALIFORNIA

Revisions:

No.	Date	Description

Issue Date: 01/30/2025
BKG Project No.: 24187
Scale: AS NOTED
Drawn By: JW

Sheet Title:
Roof Framing Plan

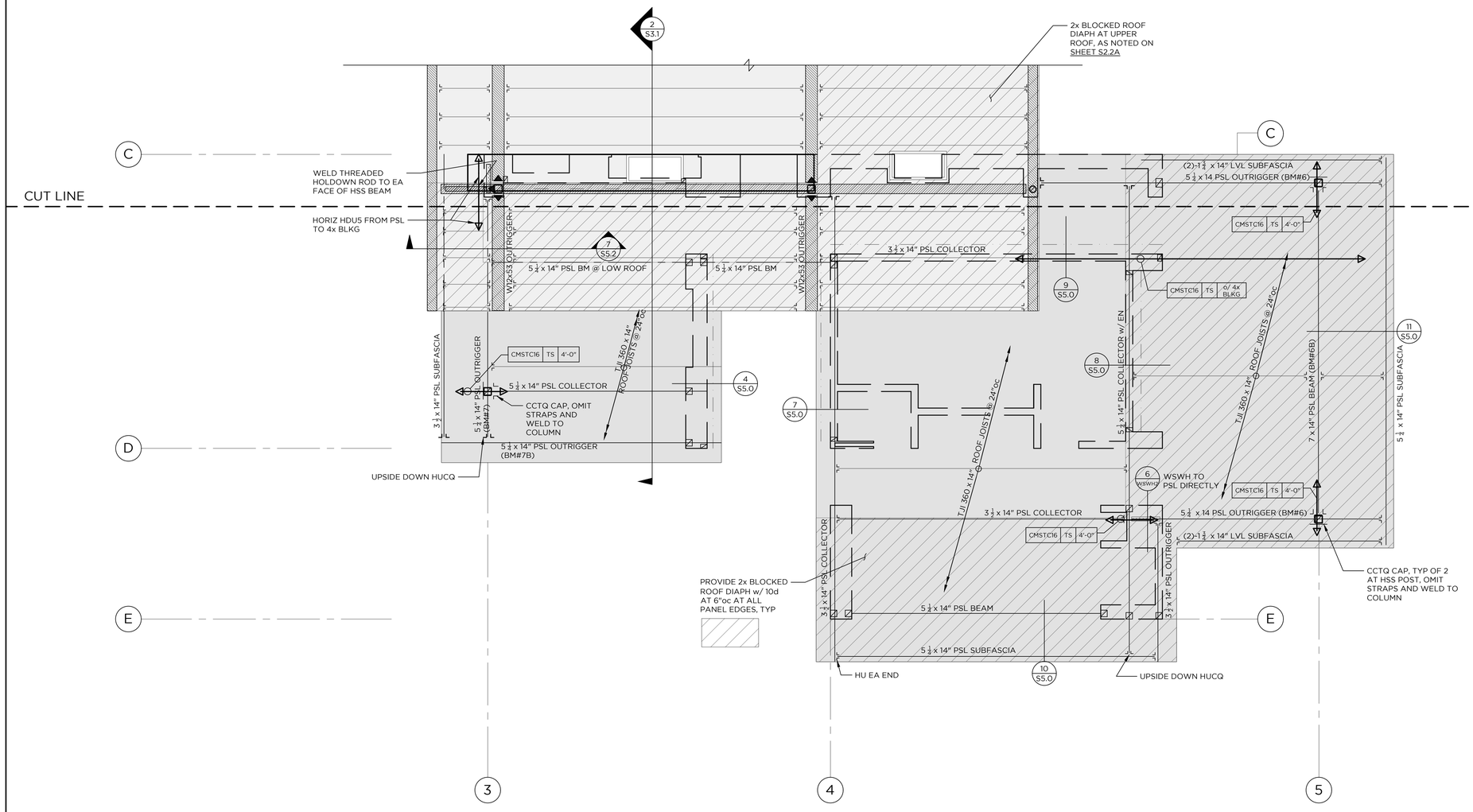

ROOF FRAMING PLAN

SCALE: 1/4" = 1'-0"

S2.2B

BKG
STRUCTURAL ENGINEERS

a California corporation
1600 El Camino Real, Unit C
San Carlos, CA 94070 650.489.9224

Project Title:
Carmel Serwin Residence

Project Address:
24 Tehama
Carmel, CA 93923

Stamp:

REGISTERED PROFESSIONAL ENGINEER
ADAM F. KLEIN
S 5941
STRUCTURAL
STATE OF CALIFORNIA

Revisions:

No.	Date	Description

Issue Date: 01/30/2025
BKG Project No.: 24187
Scale: AS NOTED
Drawn By: JW
Sheet Title: Roof Framing Plan

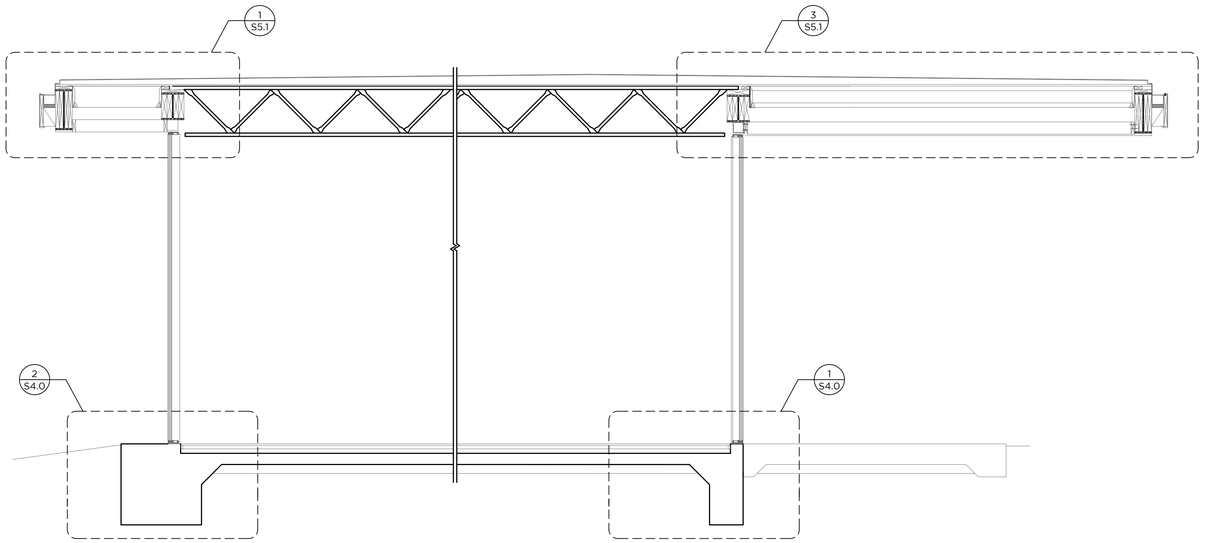

1 **SECTION THROUGH GREAT ROOM**

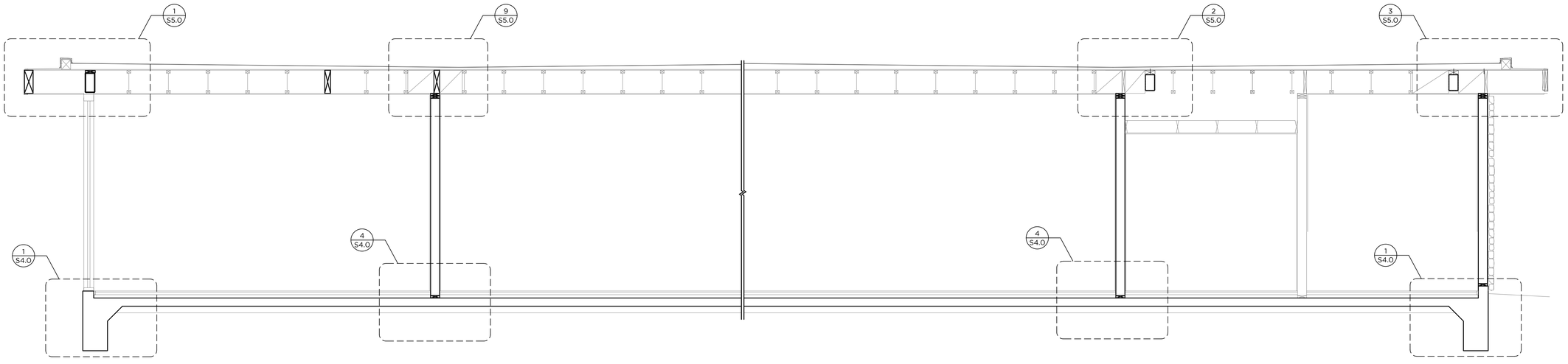

2 **LONGITUDINAL SECTION THROUGH GARAGE**

BKG
STRUCTURAL
ENGINEERS

a California corporation
1600 El Camino Real, Unit C
San Carlos, CA 94070 650.489.9224

Project Title:
Carmel Serwin
Residence

Project Address:
24 Tehama
Carmel, CA 93923

Stamp:

REGISTERED PROFESSIONAL ENGINEER
ADAM F. KLEIN
S 5941
STRUCTURAL
STATE OF CALIFORNIA

Revisions:

No.	Date	Description

Issue Date:
01/30/2025
BKG Project No.:
24187
Scale:
AS NOTED
Drawn By:
JW
Sheet Title:
Sections

S3.0

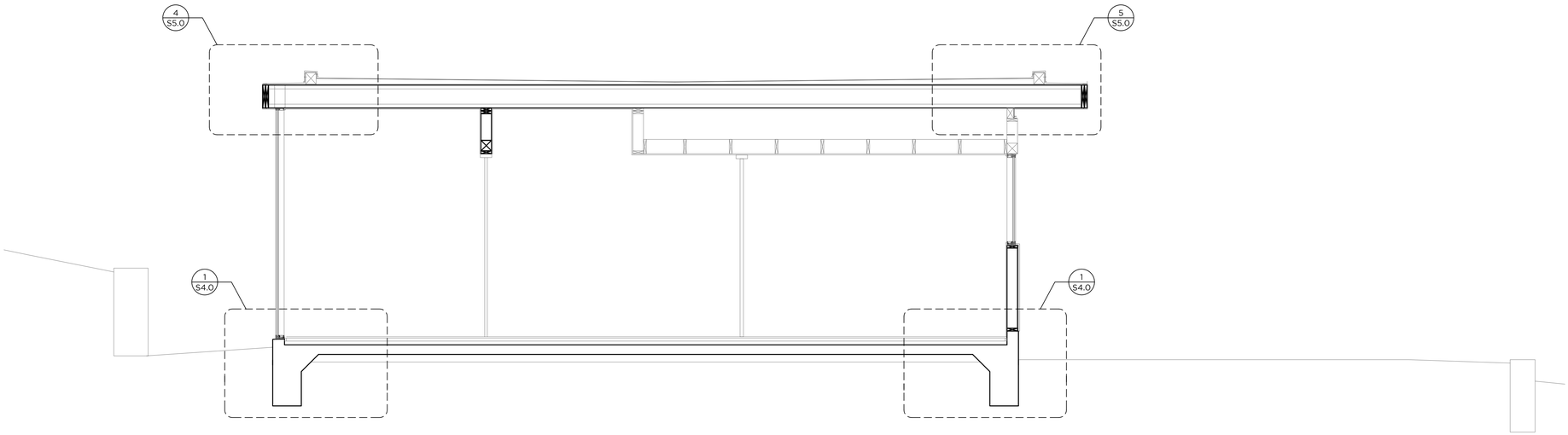

1 **SECTION THROUGH GUEST SUITE**

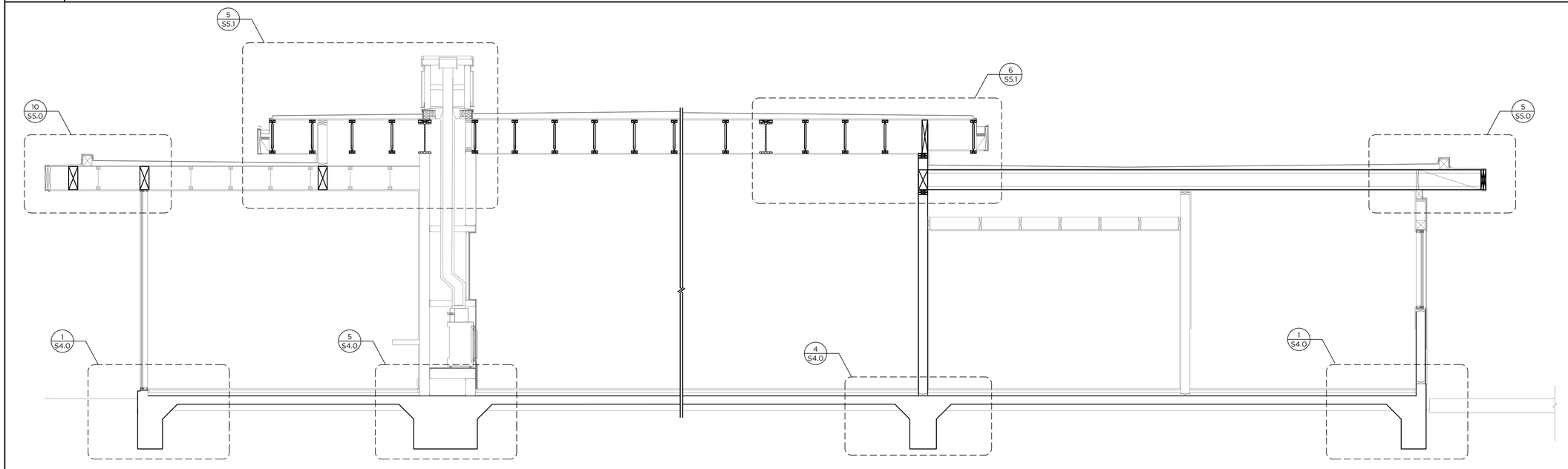

2 **LONGITUDINAL SECTION THROUGH GREAT ROOM**

BKG
STRUCTURAL
ENGINEERS

a California corporation
1600 El Camino Real, Unit C
San Carlos, CA 94070 650.489.9224

Project Title:
Carmel Serwin
Residence

Project Address:
24 Tehama
Carmel, CA 93923

Stamp:

REGISTERED PROFESSIONAL ENGINEER
ADAM F. KLEIN
S 5941
STRUCTURAL
STATE OF CALIFORNIA

Revisions:

No.	Date	Description

Issue Date:
01/30/2025
BKG Project No.:
24187
Scale:
AS NOTED
Drawn By:
JW
Sheet Title:
Sections

S3.1

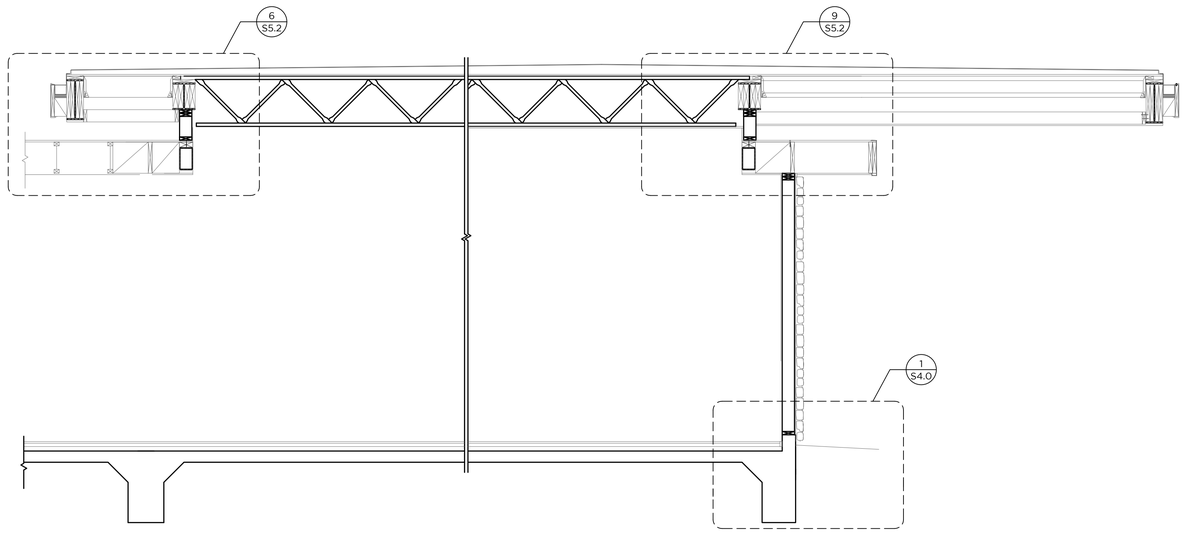

1	**SECTION THROUGH KITCHEN**
2	**NOT USED**

BKG
STRUCTURAL
ENGINEERS

a California corporation
1600 El Camino Real, Unit C
San Carlos, CA 94070 650.489.9224

Project Title:
Carmel Serwin
Residence

Project Address:
24 Tehama
Carmel, CA 93923

Stamp:



Revisions:

No.	Date	Description

Issue Date:
01/30/2025
BKG Project No.:
24187
Scale:
AS NOTED
Drawn By:
JW
Sheet Title:
Sections

S3.2

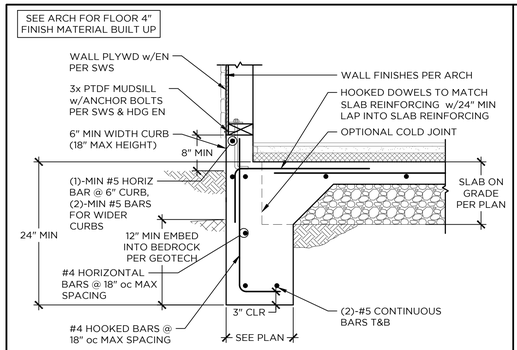

1 TYP EXTERIOR FTG

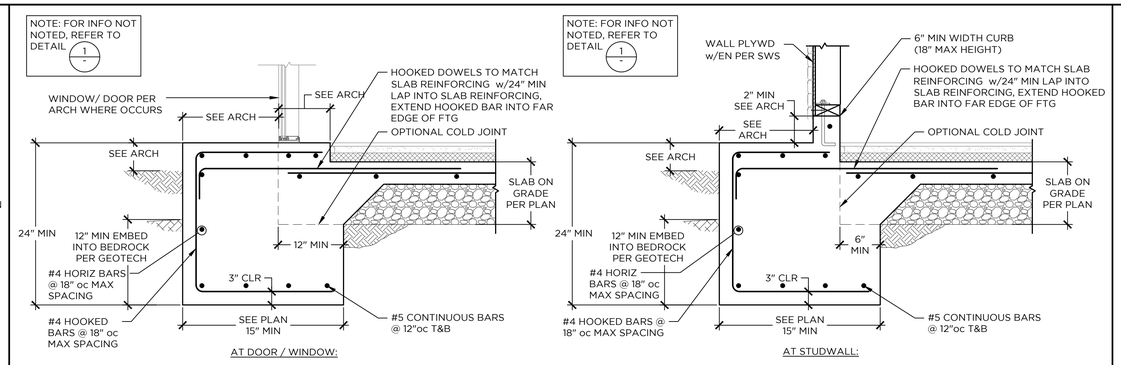

2 EXTERIOR FTG AT SLAB EXTENSION

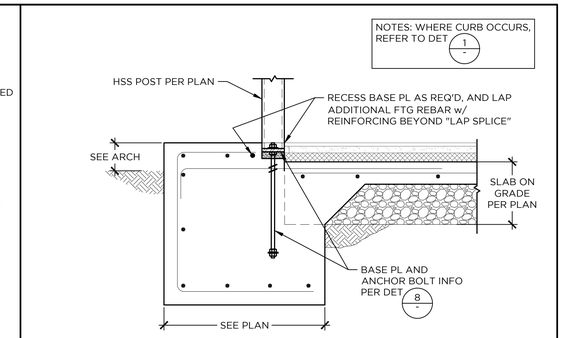

3 EXTERIOR FTG HSS POST

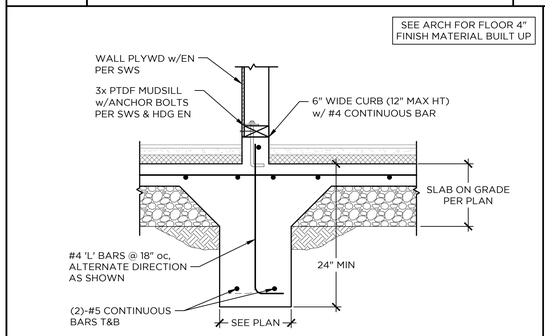

4 INTERIOR FOOTING AT SHEARWALL

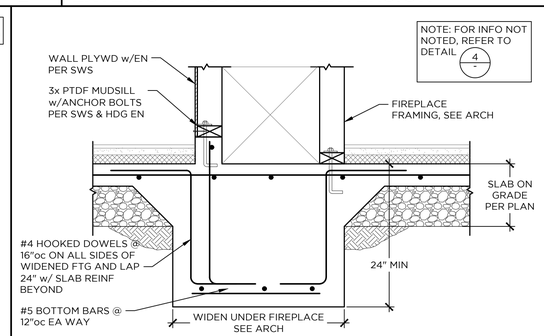

5 INTERIOR FOOTING AT FIREPLACE

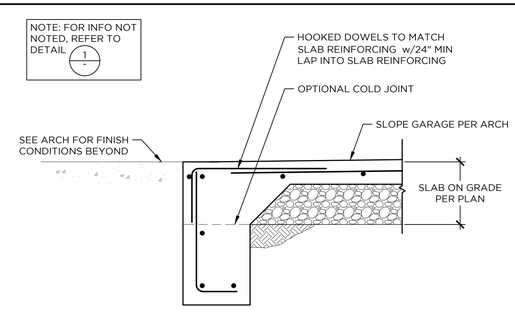

6 GARAGE SLAB EDGE

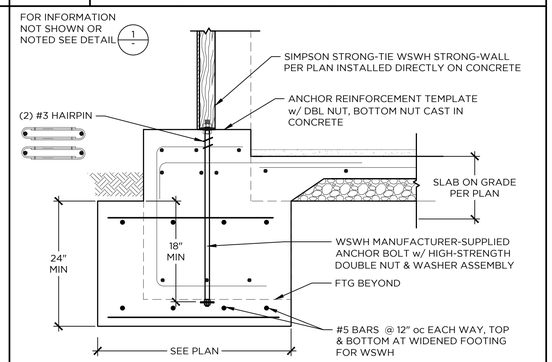

7 FOOTING at WSWH STRONG-WALL

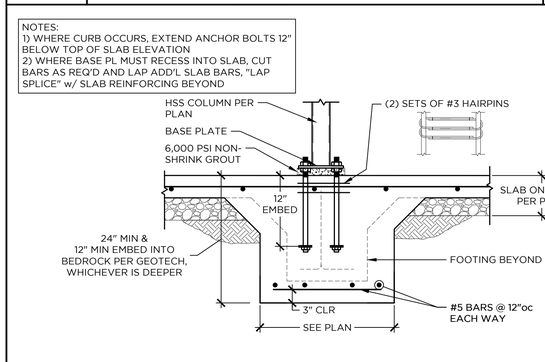

8 HSS POST AT SPREAD FOOTING

9 NOT USED

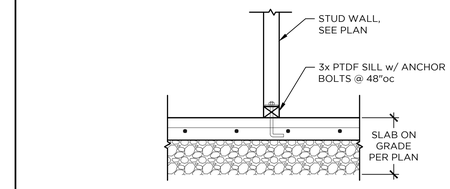

10 PARTITION WALL AT SOG

1. SEE SHEETS S0.00 TO S1.40, WSWH2, AND TJI1 FOR GENERAL NOTES AND TYPICAL DETAILS
2. SEE ARCHITECTURAL DRAWINGS FOR:
   - FINISHES
   - DRAINAGE
   - ELEVATIONS
   - GRADING
   - WATERPROOFING
3. ALL TIMBER EXPOSED TO THE ELEMENTS TO BE PRESSURE TREATED OR SUITABLE ALTERNATIVE. ALL HARDWARE EXPOSED TO THE ELEMENTS TO BE SIMPSON "Z-MAX" OR APPROVED EQUAL. ALL FASTENERS EXPOSED TO THE ELEMENTS TO BE HOT DIPPED GALVANIZED OR STAINLESS.
4. THE GENERAL CONTRACTOR IS RESPONSIBLE FOR DESIGN IMPLEMENTATION & EXECUTION. COORDINATION RESPONSIBILITIES INCLUDE BUT ARE NOT LIMITED TO:
   - DIMENSIONS / ELEVATIONS
   - INTERNAL COORDINATION w/ STRUCTURAL DESIGN
   - EXTERNAL COORDINATION w/ OTHER DISCIPLINES (ARCHITECTURE, CIVIL, MECHANICAL, PLUMBING, ELECTRICAL, TITLE 24, LANDSCAPE, ETC)
5. THE GENERAL CONTRACTOR IS RESPONSIBLE FOR SATISFYING INSPECTION / OBSERVATION REQUIREMENTS INCLUDING BUT NOT LIMITED TO EOR, BUILDING INSPECTOR, GEOTECHNICAL, and SPECIAL INSPECTOR)
6. THE GENERAL CONTRACTOR IS RESPONSIBLE FOR SATISFYING SUBMITTAL REQUIREMENTS (SPECIAL INSPECTION, SHOP DRAWINGS, TESTING PROCEDURES, MOCK UPS, DEFERRED SUBMITTALS, ETC)

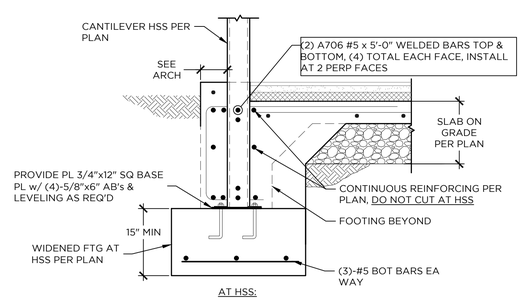

11 FTG AT CANTILEVER HSS COL

12 NOT USED

NOTES

BKG STRUCTURAL ENGINEERS

a California corporation
1600 El Camino Real, Unit C
San Carlos, CA 94070 650.489.9224

Project Title:
Carmel Serwin Residence

Project Address:
24 Tehama
Carmel, CA 93923

Stamp:

REGISTERED PROFESSIONAL ENGINEER ADAM F. KLEIN S 5941 STRUCTURAL STATE OF CALIFORNIA

Revisions:

No.	Date	Description

Issue Date: 01/30/2025
BKG Project No.: 24187
Scale: AS NOTED
Drawn By: JW
Sheet Title: Framing Details

S4.0

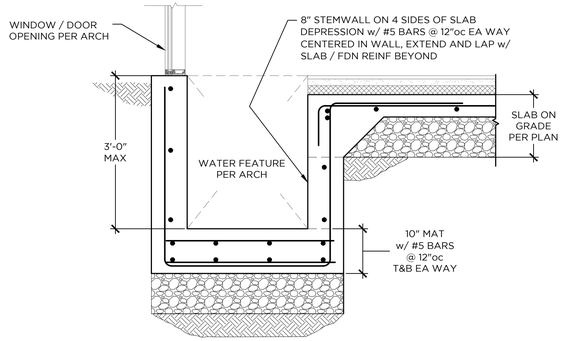

NOTES: ALTERNATIVELY, PROVIDE 8" STEMWALL ON ALL 4 SIDES OF SLAB DEPRESSION TO BLOCK OUT RETAINING SOIL. COORDINATE DESIGN w/ ARCH

1 DEPRESSED SLAB AT BATHROOM

NOTES: NOTIFY ENGINEER IF STEMWALL SIZE NEEDS TO INCREASE, AS WALL REINF AND FOOTING WIDTH MAY NEED TO INCREASE

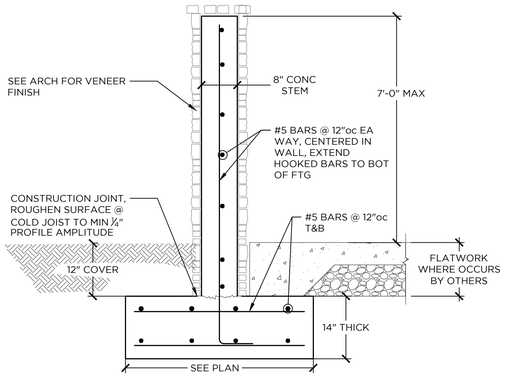

T-FOOTING CONFIGURATION:

5 FREESTANDING SITE WALL

NOTE: FOR INFO NOT NOTED, REFER TO DETAIL 5/-

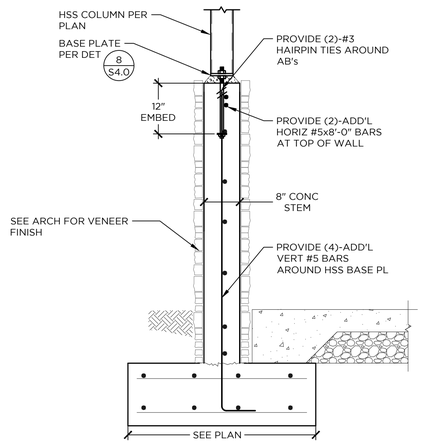

T-FOOTING CONFIGURATION:

6 HSS POST AT EXTERIOR WALL

7 NOT USED

8 NOT USED

NO SURCHARGE

BACKFILL	MAX RETAINED HEIGHT (FT)	FOOTING TOTAL WIDTH (FT)
2:1 MAX SLOPE	2'-0"	2'-0"
	4'-0"	4'-0"

NOTE: WHERE STEM WIDTH EXCEEDS 10" PROVIDE #5 BARS @ 12" oc EACH WAY, ALONG EACH FACE

MAX 2:1 (HORIZ:VERT) SLOPE

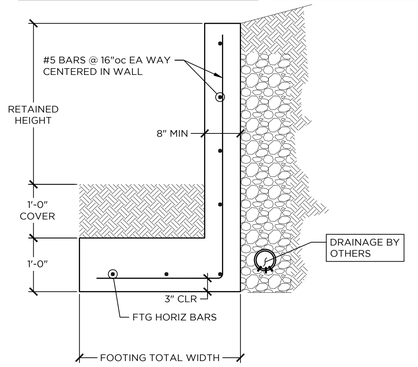

NOTE: ALL SHALLOW FOOTINGS SHALL BE EMBEDDED A MINIMUM OF 12" INTO COMPETENT SOIL / BEDROCK OR AS REQUIRED BY GEOTECHNICAL ENGINEER

2 TYP SITE RETAINING WALL

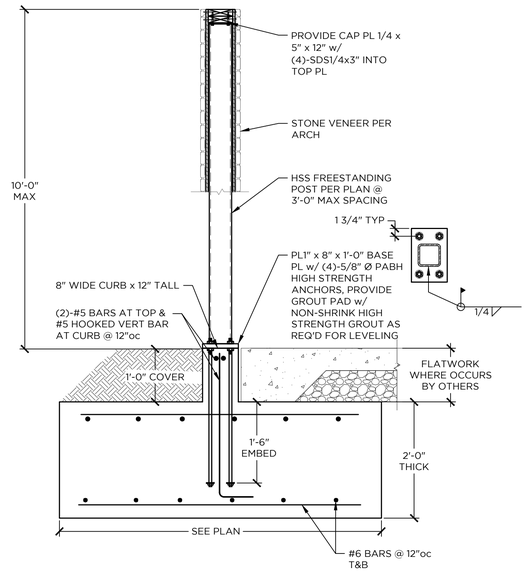

9 HSS POST AT FREESTANDING STUDWALL

NO SURCHARGE

BACKFILL	MAX RETAINED HEIGHT (FT)	FOOTING TOTAL WIDTH (FT)
2:1 MAX SLOPE	2'-0"	2'-0"
	4'-0"	4'-0"

NOTE: WHERE STEM WIDTH EXCEEDS 10" PROVIDE #5 BARS @ 12" oc EACH WAY, ALONG EACH FACE

MAX 2:1 (HORIZ:VERT) SLOPE

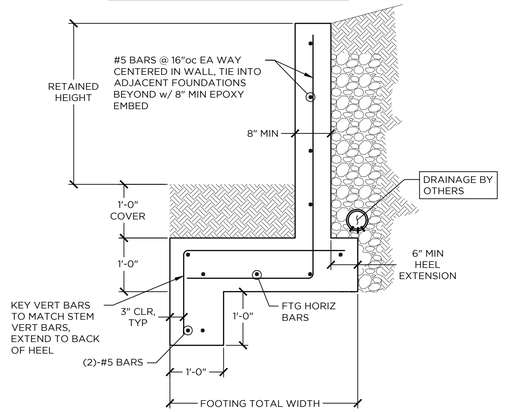

NOTE: ALL SHALLOW FOOTINGS SHALL BE EMBEDDED A MINIMUM OF 12" INTO COMPETENT SOIL / BEDROCK OR AS REQUIRED BY GEOTECHNICAL ENGINEER

3 SITE WALL CONNECTED TO STRUCTURE

10 NOT USED

11 NOT USED

BKG STRUCTURAL ENGINEERS
a California corporation
1600 El Camino Real, Unit C
San Carlos, CA 94070 650.489.9224

Project Title:
Carmel Serwin Residence

Project Address:
24 Tehama
Carmel, CA 93923

Stamp:

REGISTERED PROFESSIONAL ENGINEER ADAM F. KLEIN S 5941 STRUCTURAL STATE OF CALIFORNIA

Revisions:

No.	Date	Description

Issue Date: 01/30/2025
BKG Project No.: 24187
Scale: AS NOTED
Drawn By: JW
Sheet Title: Framing Details

S4.1

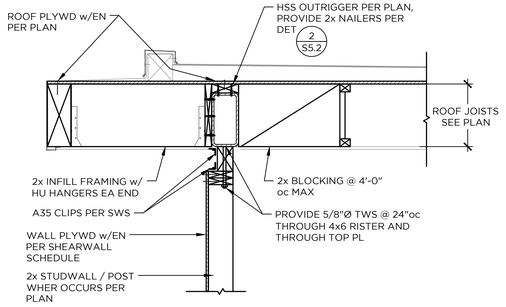

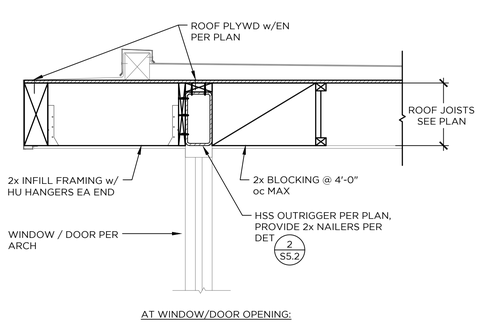

1 TYP ROOF OVERHANG AT PARALLEL JOISTS

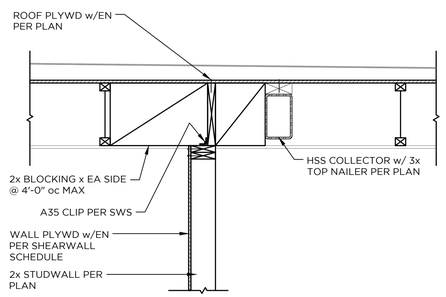

2 HSS COLLECTOR TO OFFSET SHEARWALL

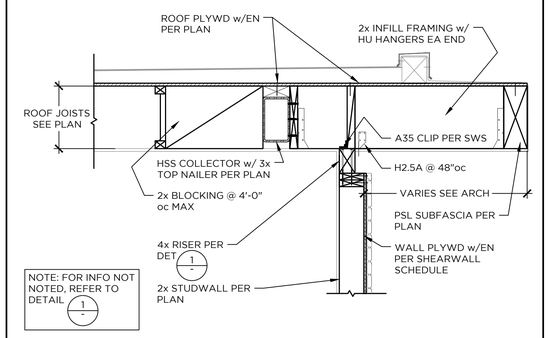

3 HSS COLLECTOR TO OFFSET SHEARWALL

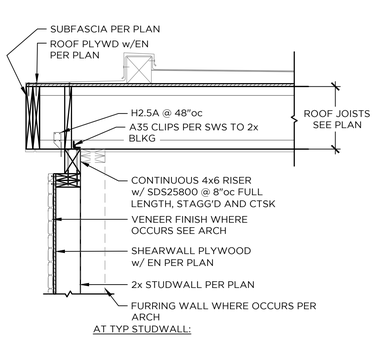

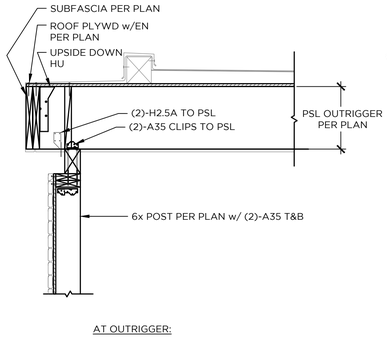

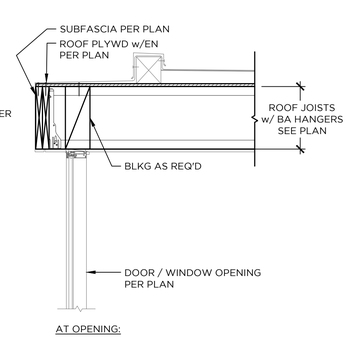

4 EXTERIOR ROOF SECTION AT PERPENDICULAR FRAMING

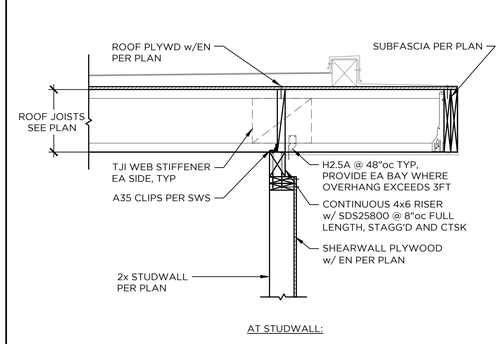

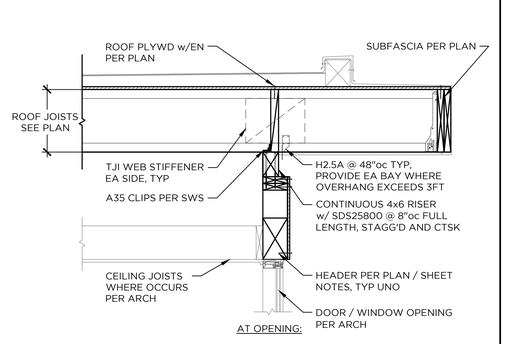

5 ROOF SECTION AT OVERHANG

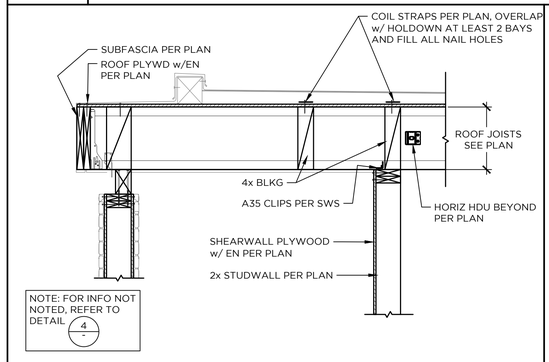

6 SHEAR TRANSFER TO INTERIOR SW

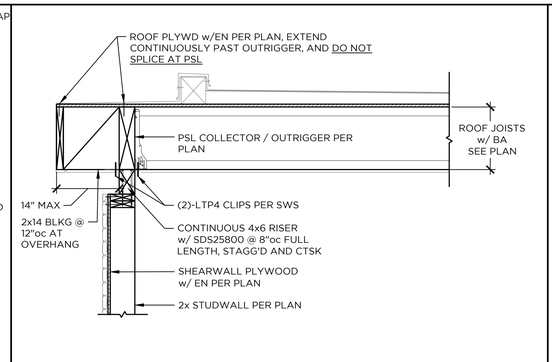

7 ROOF SECTION AT OUTRIGGER

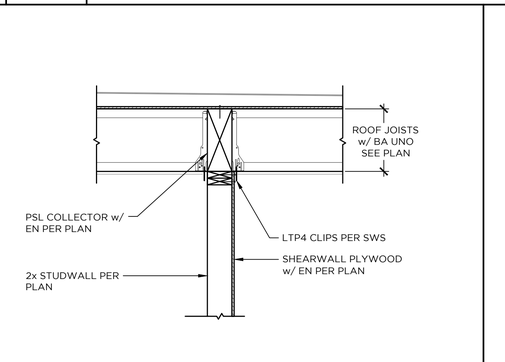

8 SHEARWALL AT PERP FRAMING

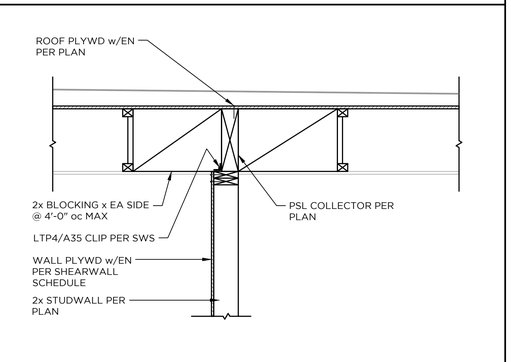

9 SHEARWALL AT PARALLEL FRAMING

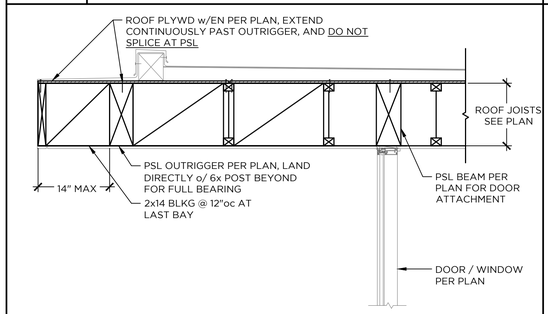

10 ROOF EDGE SECTION

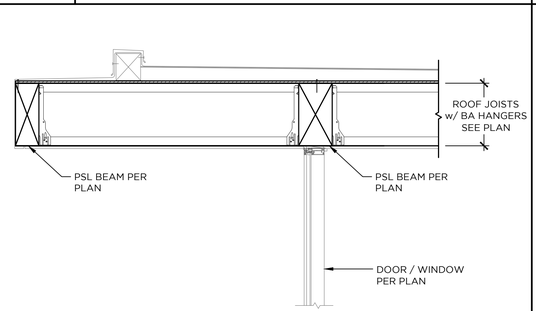

11 ROOF OVERHANG AT M. SUITE

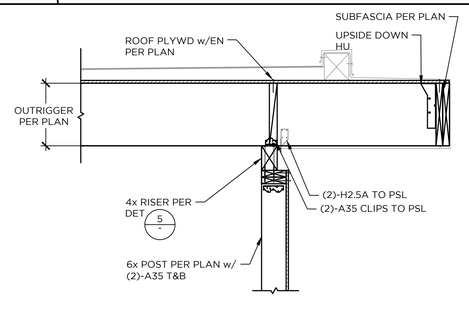

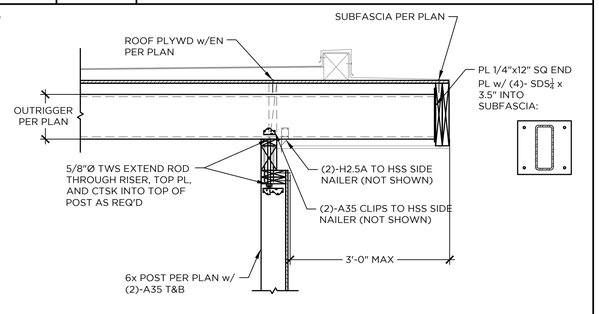

12 OUTRIGGER CONN AT OVERHANG

BKG STRUCTURAL ENGINEERS
a California corporation
1600 El Camino Real, Unit C
San Carlos, CA 94070 650.489.9224

Project Title:
Carmel Serwin Residence

Project Address:
24 Tehama
Carmel, CA 93923

Stamp:



Revisions:

No.	Date	Description

Issue Date: 01/30/2025
BKG Project No.: 24187
Scale: AS NOTED
Drawn By: JW
Sheet Title: Framing Details

S5.0

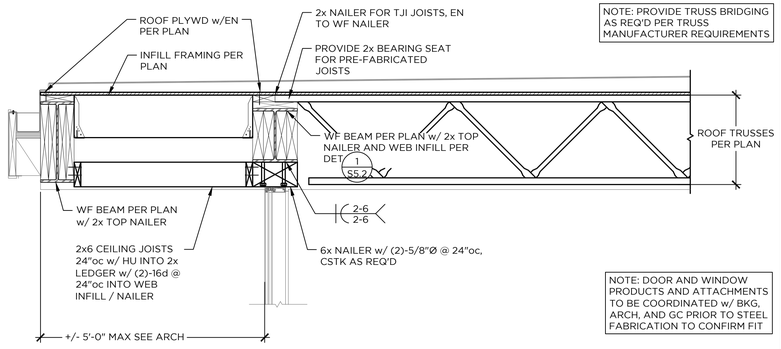

1 ROOF OVERHANG AT TRUSSES

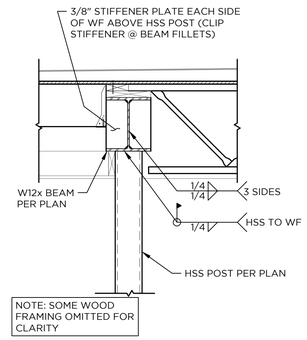

2 WF BM TO HSS POST

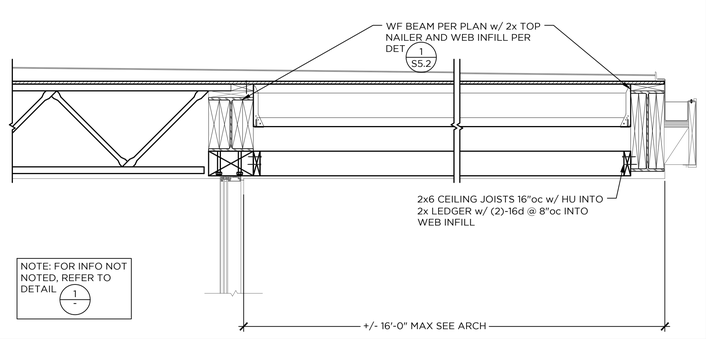

3 ROOF OVERHANG AT TRUSSES

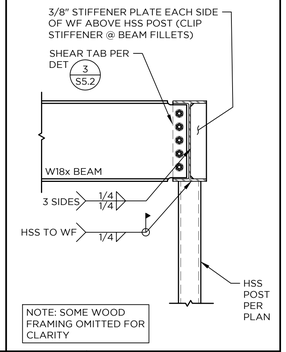

4 WF TO HSS POST

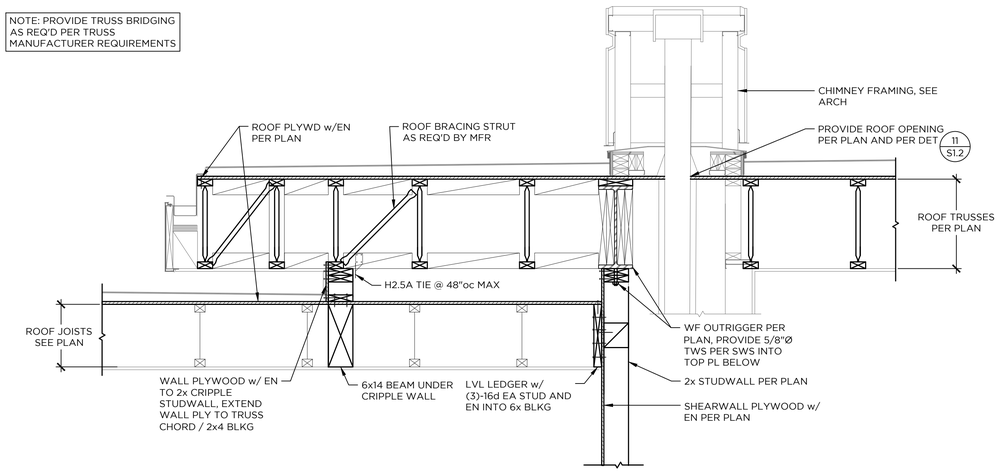

5 HIGH ROOF TO LOW ROOF TRANSITION AT FIREPLACE

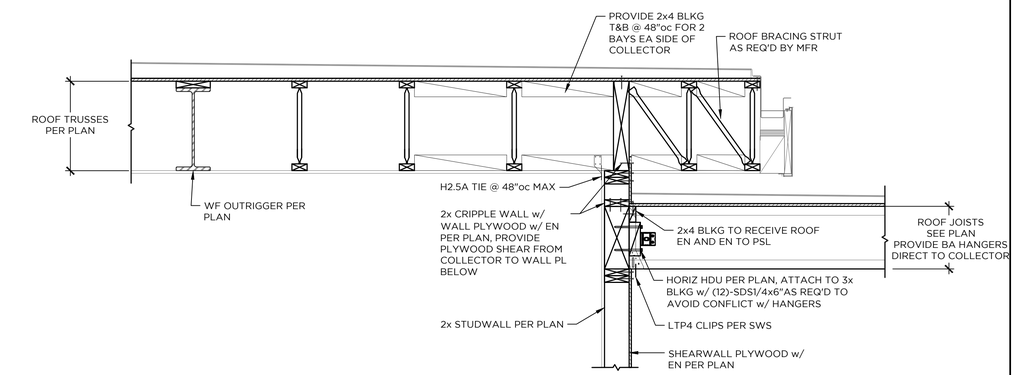

6 HIGH TO LOW ROOF TRANSITION AT KITCHEN

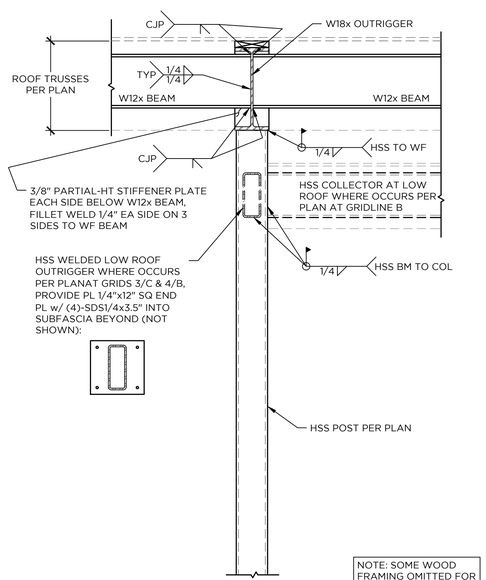

7 WELDED CONN AT WF/HSS OUTRIGGERS

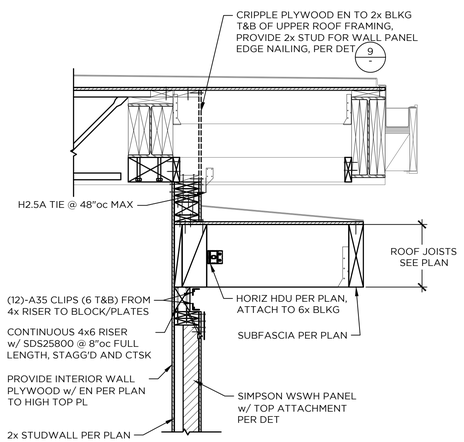

8 WSWH PANEL AT HIGH / LOW ROOF

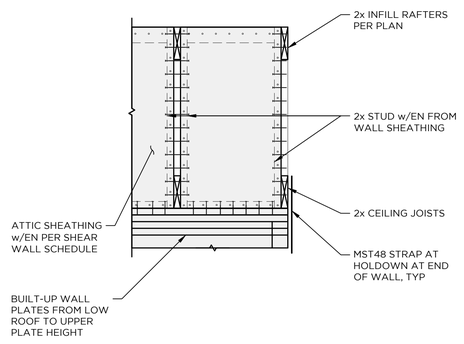

9 CRIPPLE WALL SHEAR TRANSFER

10 NOT USED

BKG STRUCTURAL ENGINEERS
a California corporation
1600 El Camino Real, Unit C
San Carlos, CA 94070 650.489.9224

Project Title:
Carmel Serwin Residence

Project Address:
24 Tehama
Carmel, CA 93923

Stamp:



Revisions:

No.	Date	Description

Issue Date: 01/30/2025
BKG Project No.: 24187
Scale: AS NOTED
Drawn By: JW
Sheet Title: Framing Details

S5.1

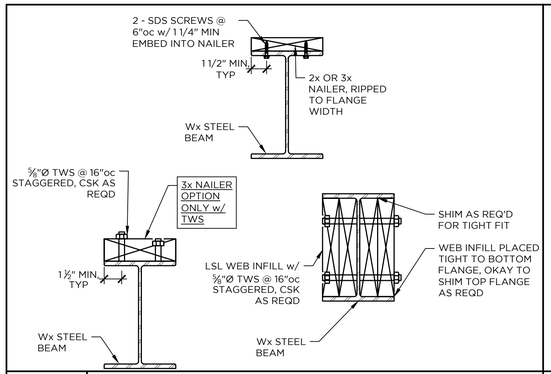

1 WIDE FLANGE NAILER OPTIONS

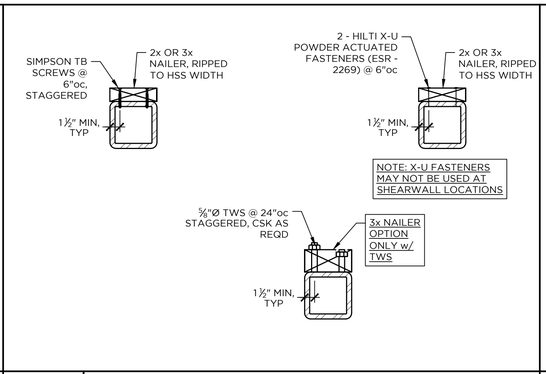

2 HSS NAILER OPTIONS

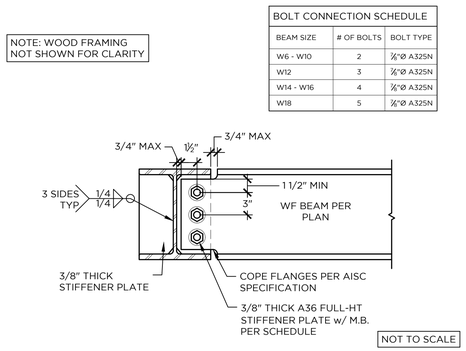

BOLT CONNECTION SCHEDULE

BEAM SIZE	# OF BOLTS	BOLT TYPE
W6 - W10	2	⅞"Ø A325N
W12	3	⅞"Ø A325N
W14 - W16	4	⅞"Ø A325N
W18	5	⅞"Ø A325N

3 WF TO WF CONN

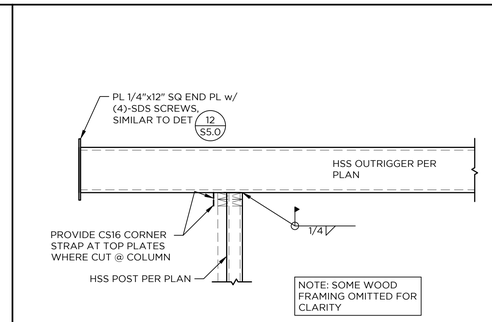

4 HSS BEAM TO HSS COL CONN

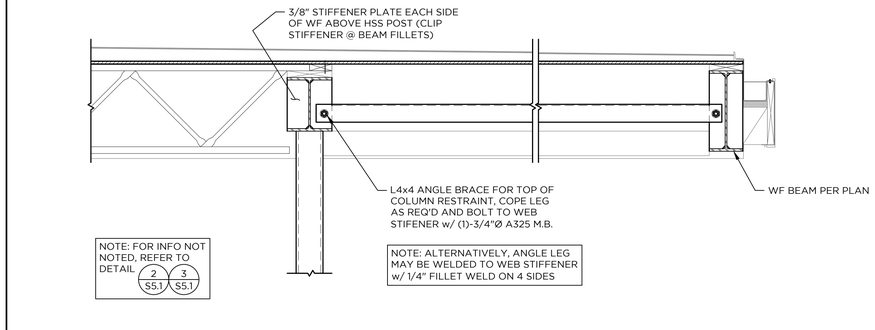

5 TOP OF COLUMN BRACE

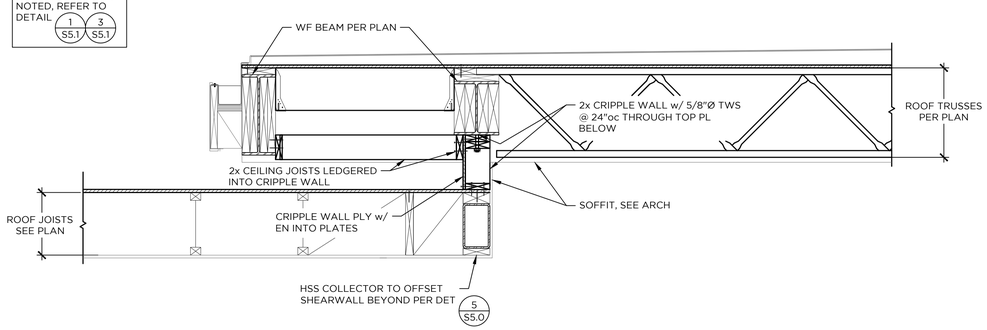

6 SECTION AT UPPER TO LOWER ROOF

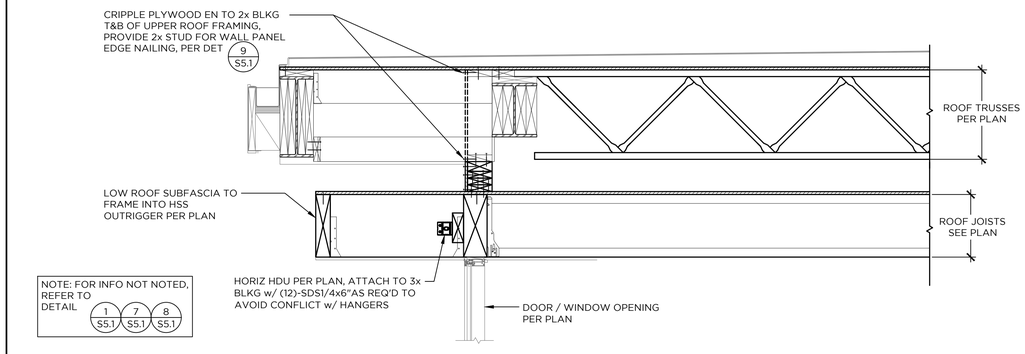

7 SECTION AT UPPER TO LOWER ROOF

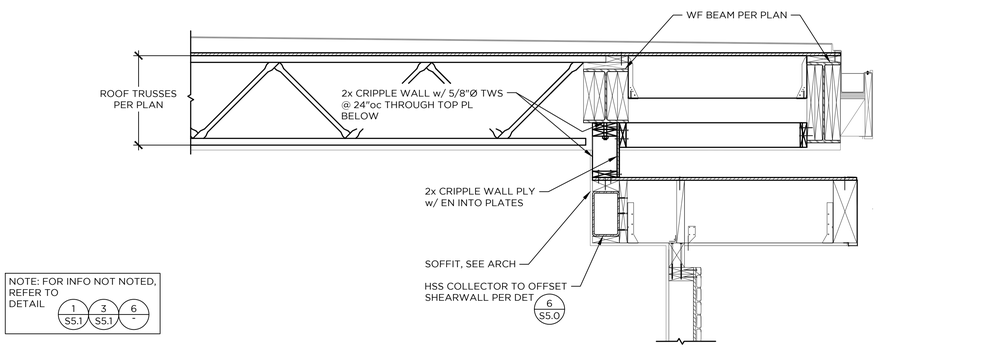

8 SECTION AT UPPER TO LOWER ROOF

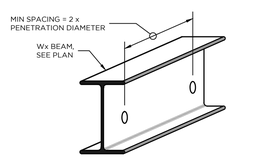

NOTES:
MAX PENETRATION SIZE = 2"
1. DO NOT PENETRATE COLUMNS w/o WRITTEN CONSENT FROM EOR
2. DO NOT PENETRATE MOMENT FRAMES w/o WRITTEN CONSENT FROM EOR
3. COORDINATE PENETRATION LOCATIONS WITH MEP DRAWINGS
4. SMALL PENETRATIONS ARE ALLOWED ALONG ANY POINT OF BEAM SPAN

SMALL PENETRATIONS

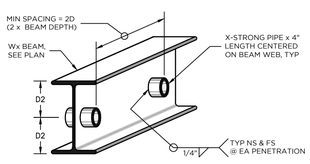

NOTES:
1. MAX PENETRATION SIZE:
   = .25D FOR W12 AND SMALLER BEAMS
   = 40D FOR W14 AND LARGER BEAMS
2. DO NOT PENETRATE COLUMNS w/o WRITTEN CONSENT FROM EOR
3. DO NOT PENETRATE MOMENT FRAMES w/o WRITTEN CONSENT FROM EOR
4. COORDINATE PENETRATION LOCATIONS WITH MEP DRAWINGS
5. MEDIUM PENETRATIONS ARE NOT ALLOWED IN END 1/3 SPAN OF SIMPLE SPAN BEAMS, OR BELOW CONCENTRATED LOADS
6. DO NOT PENETRATE CONTINUOUS BEAMS WITHOUT WRITTEN APPROVAL FROM BKG.

MEDIUM PENETRATIONS

NOTE: ALL MEDIUM AND LARGE PENETRATIONS MUST BE CLEARLY SHOWN ON STEEL SHOP DRAWING SUBMITTALS FOR REVIEW AND APPROVAL BY BKG.

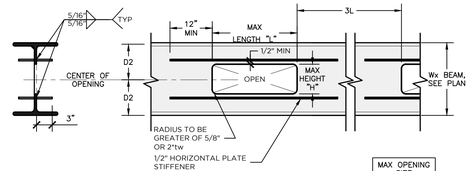

LARGE PENETRATIONS

BEAM SIZE	MAX OPENING SIZE L	H
W18	18"	9"

NOTES:
1) ALL LARGE PENETRATIONS MUST BE CLEARLY SHOWN ON STEEL SHOP DRAWING SUBMITTALS FOR REVIEW AND APPROVAL BY BKG. SPECIFIC BEAM CONDITIONS MAY REQUIRE ADJUSTMENTS TO DETAIL.
2) ALL LARGE PENETRATIONS SHALL BE LOCATED SUCH THAT THE EDGE OF THE OPENING IS LOCATED NO CLOSER THAN THE DEPTH OF THE BEAM "D" AWAY FROM THE SUPPORT. FOR BOLTED CONNECTIONS THE SUPPORT EDGE SHALL BE CONSIDERED THE FIRST LINE OF BOLTS.
3) ALL LARGE PENETRATIONS SHALL BE LOCATED AT LEAST 1/2 THE DEPTH OF THE BEAM "D/2" AWAY FROM CONCENTRATED LOADS (COLUMNS ABOVE, PERPENDICULAR BEAMS, ETC.)

9 STEEL BEAM PENETRATIONS

10 NOT USED

BKG
STRUCTURAL ENGINEERS
a California corporation
1600 El Camino Real, Unit C
San Carlos, CA 94070 650.489.9224

Project Title:
Carmel Serwin Residence

Project Address:
24 Tehama
Carmel, CA 93923

Stamp:



Revisions:

No.	Date	Description

Issue Date: 01/30/2025
BKG Project No.: 24187
Scale: AS NOTED
Drawn By: JW
Sheet Title: Framing Details

S5.2

STRONG-WALL® HIGH STRENGTH WOOD SHEARWALL MODELS

MODEL NO.	W (in.)	H (in.)	ANCHOR BOLTS		TOTAL WALL WEIGHT (lb.)
			QUANTITY	DIA. (in.)	
WSWH12x7	12	84	2	1	105
WSWH18x7	18	84	2	1	155
WSWH12x8	12	96	2	1	120
WSWH18x8	18	96	2	1	175
WSWH24x8	24	96	2	1	225
WSWH12x9	12	108	2	1	130
WSWH18x9	18	108	2	1	195
WSWH24x9	24	108	2	1	250
WSWH12x10	12	120	2	1	145
WSWH18x10	18	120	2	1	210
WSWH24x10	24	120	2	1	275
WSWH12x12	12	144	2	1	165
WSWH18x12	18	144	2	1	245
WSWH24x12	24	144	2	1	325
WSWH18x14	18	168	2	1	285
WSWH24x14	24	168	2	1	370
WSWH24x16	24	192	2	1	420
WSWH18x20	18	240	2	1	390
WSWH24x20	24	240	2	1	520

NOTES :
1. FOR HEIGHTS NOT LISTED, ORDER THE NEXT TALLEST PANEL AND TRIM TO FIT. MINIMUM TRIMMED HEIGHT FOR ALL PANELS IS 74⅝".
2. ALL PANELS COME WITH PRE-ATTACHED HOLDOWNS, TWO HEAVY HEX NUTS, TWO HEAVY BEARING PLATES, ONE WSWH-TP TOP CONNECTION PLATE WITH REQUIRED FASTENERS AND INSTALLATION INSTRUCTIONS.
3. ALL PANELS ARE 3½" THICK.

PLACE STRONG-WALL® HIGH STRENGTH WOOD SHEARWALL OVER THE ANCHOR BOLTS AND SECURE WITH HEAVY BEARING PLATES AND HEAVY HEX NUTS (PROVIDED). DO NOT USE AN IMPACT WRENCH. USE 1⅛" WRENCH FOR 1" NUT. TIGHTEN ANCHOR NUTS FINGER TIGHT + ½" TURN.

DESIGNER IS PERMITTED TO MODIFY DETAILS FOR SPECIFIC CONDITIONS.

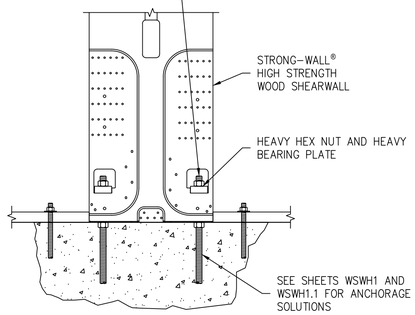

MODEL NO.	WSWH-TP CONNECTION FASTENER QUANTITY	
	SWS16150	SDS25600
WSWH-TP12	14	2
WSWH-TP18	26	4
WSWH-TP24	46	8

DESIGNER IS PERMITTED TO MODIFY DETAILS FOR SPECIFIC CONDITIONS.

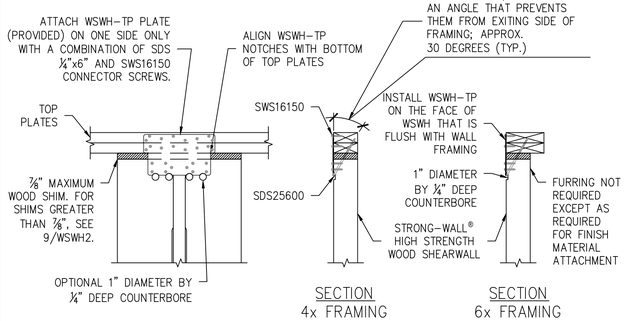

SECTION
4x FRAMING

SECTION
6x FRAMING
(8x FRAMING SIMILAR)

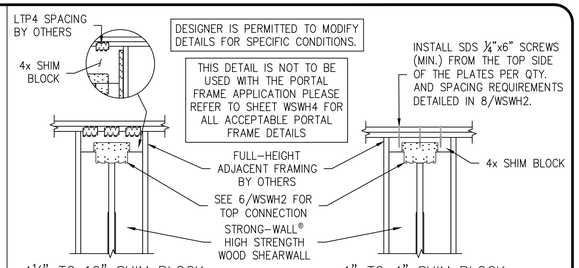

4⅛" TO 12" SHIM BLOCK

1" TO 4" SHIM BLOCK

DESIGNER SHALL DESIGN AND DETAIL FOR:
1. SHEAR TRANSFER
2. OUT-OF-PLANE LOADING EFFECT
3. INCREASED OVERTURNING AND DRIFT DUE TO ADDITIONAL HEIGHT

FOR 8" TO 12" BLOCK DEPTHS:
ATTACH SIMPSON STRONG-TIE® CS16 STRAPS AT EDGE OF WSWH PANEL (EACH SIDE) USING 10dx1½" NAILS

SHIM BLOCK HEIGHTS GREATER THAN 8" AND UP TO 10":
- 8 NAILS INTO BLOCK
- 8 NAILS INTO WSWH PANEL

SHIM BLOCK HEIGHTS GREATER THAN 10" AND UP TO 12":
- 10 NAILS INTO BLOCK
- 10 NAILS INTO WSWH PANEL

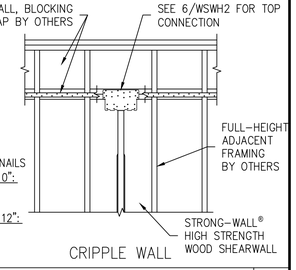

CRIPPLE WALL

STRONG-WALL® WSWH MODELS | 1

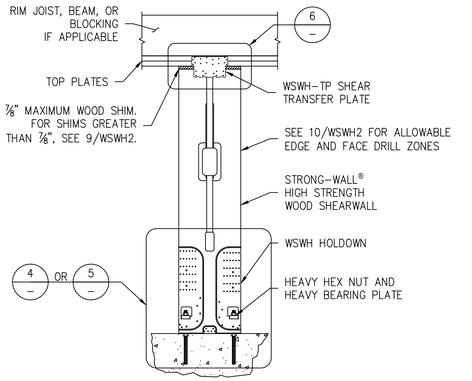

DESIGNER IS PERMITTED TO MODIFY DETAILS FOR SPECIFIC CONDITIONS.

ENSURE CONCRETE IS LEVEL AND SMOOTH BENEATH PANEL. GRIND OR FILL AS NECESSARY.

SINGLE STORY WSWH ON CONCRETE | 2

STANDARD INSTALLATION BASE CONNECTION | 4

PLACE STRONG-WALL® HIGH STRENGTH WOOD SHEARWALL OVER THE ANCHOR BOLTS AND SECURE WITH HEAVY BEARING PLATES AND HEAVY HEX NUTS (PROVIDED). DO NOT USE AN IMPACT WRENCH. USE 1⅛" WRENCH FOR 1" NUT. TIGHTEN ANCHOR NUTS FINGER TIGHT + ½" TURN.

DESIGNER IS PERMITTED TO MODIFY DETAILS FOR SPECIFIC CONDITIONS.

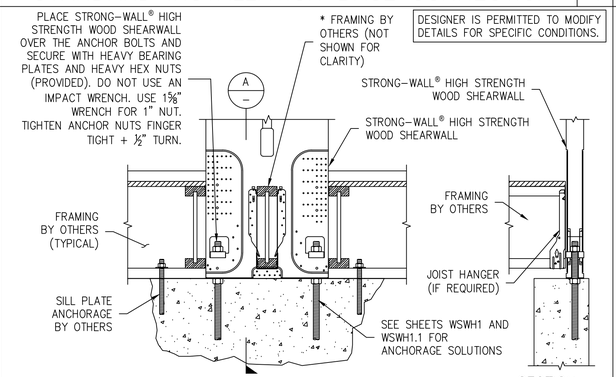

SECTION A

STRONG-WALL® HIGH STRENGTH WOOD SHEARWALL HEIGHT TO INCLUDE THE DEPTH OF THE FLOOR SYSTEM AND SHALL BE INSTALLED DIRECTLY ON THE FOUNDATION. SPECIFY PANEL HEIGHT FROM TOP OF FOUNDATION TO UNDERSIDE OF TOP PLATES OR BEAM.

*THIS DETAIL APPLICABLE ONLY FOR WSWH18 & WSWH24. JOISTS MAY NOT FRAME INTO WSWH12 MODELS..

WOOD FLOOR SYSTEM BASE CONNECTION | 5

TOP CONNECTION | 6

MODEL NO.	WSWH-TP CONNECTION FASTENER QUANTITY	
	SWS16150	SDS25600
WSWH-TP12	28	4
WSWH-TP18	52	8
WSWH-TP24	92	16

DESIGNER IS PERMITTED TO MODIFY DETAILS FOR SPECIFIC CONDITIONS.

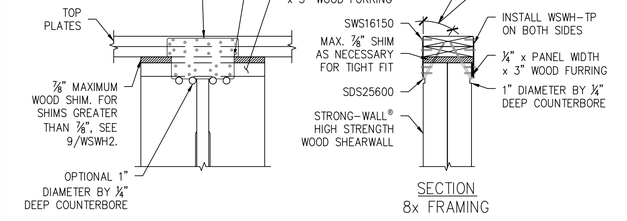

SECTION
8x FRAMING

BACK-TO-BACK TOP CONNECTION | 7

TOP OF WALL HEIGHT ADJUSTMENTS | 9

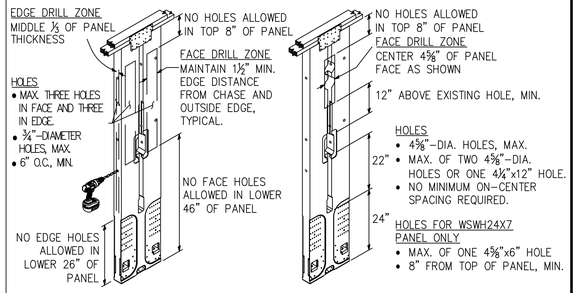

ALLOWABLE SMALL HOLES
FACE AND EDGE DRILL ZONES

ALLOWABLE LARGE HOLES
IN ADDITION TO ALLOWABLE SMALL HOLES

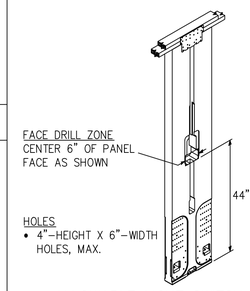

ALLOWABLE LIGHT SWITCH HOLE
FACE DRILL ZONE

MODEL NO.	W (IN.)	REDUCTION FACTORS
WSWH18	18	0.90
WSWH24	24	0.95

NOTES :
1. DO NOT DRILL THE MENTIONED LIGHT SWITCH HOLE IN WSWH12.
2. FOR WSWH18 AND WSWH24, ALLOWABLE SHEAR LOAD MUST BE MULTIPLIED BY THE LOAD REDUCTION FACTOR.

TRIM ZONE AND ALLOWABLE HOLES | 10

1. STRONG-WALL® HIGH STRENGTH WOOD SHEARWALL IS MANUFACTURED AND TRADEMARKED BY "SIMPSON STRONG-TIE COMPANY INC." HOME OFFICE: 5956 W. LAS POSITAS BLVD., PLEASANTON, CA 94588 TEL: (800) 999-5099, FAX: (925) 847-1597. "SIMPSON STRONG-TIE COMPANY INC." IS AN ISO 9001-2008 REGISTERED COMPANY.
2. USE OF THIS PRODUCT IS SUBJECT TO THE APPROVAL OF THE LOCAL BUILDING DEPARTMENT.
3. THIS PRODUCT IS PART OF THE OVERALL LATERAL FORCE RESISTING SYSTEM OF THE STRUCTURE. DESIGN OF THE BUILDING'S LATERAL FORCE RESISTING SYSTEM, INCLUDING THE LOAD PATH TO TRANSFER LATERAL FORCES FROM THE STRUCTURE TO THE GROUND, IS THE RESPONSIBILITY OF THE DESIGNER.
4. ENGINEER OF RECORD IS PERMITTED TO MODIFY DETAILS FOR SPECIFIC CONDITIONS.
5. THE CONTRACTOR SHALL VERIFY ALL DIMENSIONS, CONDITIONS, ELEVATIONS, ETC. PRIOR TO INSTALLATION OF ANY COMPONENTS FOR THE STRONG-WALL SB SYSTEM. IF ANY DISCREPANCIES ARE FOUND, THEY SHALL BE BROUGHT TO THE ATTENTION OF THE DESIGNER FOR CLARIFICATION PRIOR TO CONSTRUCTION.
6. INSTALLATION OF PRODUCT SHALL BE DONE IN CONFORMANCE TO THESE DRAWINGS. THE PERFORMANCE OF MODIFIED PRODUCTS OR ALTERED INSTALLATION PROCEDURES ARE THE SOLE RESPONSIBILITY OF THE DESIGNER.
7. SIMPSON STRONG-TIE COMPANY INC. RESERVES THE RIGHT TO CHANGE SPECIFICATIONS, DESIGNS, AND MODELS WITHOUT NOTICE OR LIABILITY FOR SUCH CHANGES.
8. ALL HARDWARE CALLED OUT IS SIMPSON STRONG-TIE.
9. SEE ICC-ES ESR-2652 OR CITY OF LOS ANGELES RR25730 AS APPLICABLE FOR ADDITIONAL INFORMATION.

NOTES | 11

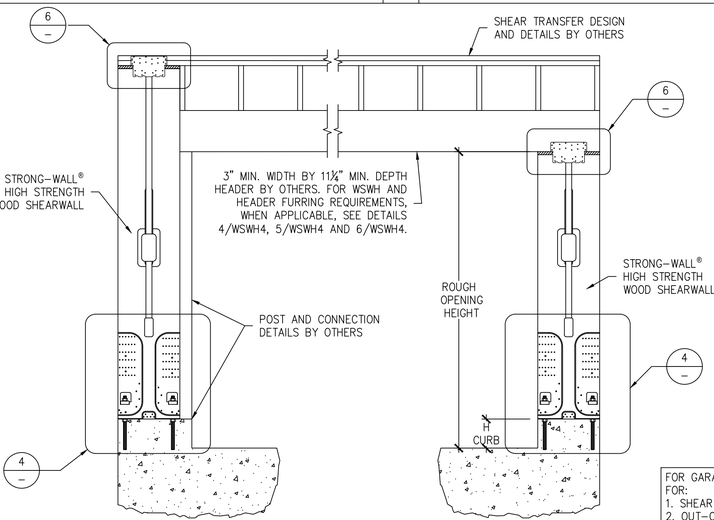

GARAGE WALL OPTION 1

GARAGE WALL OPTION 2

DESIGNER IS PERMITTED TO MODIFY DETAILS FOR SPECIFIC CONDITIONS.

WHEN WSWH-PS STRAPS OMITTED, ALLOWABLE SHEAR VALUES FOR STANDARD PANEL APPLY.

GARAGE HEADER ROUGH OPENING HEIGHT

MODEL NO.	TRIMMED PANEL HEIGHT	H CURB	ROUGH OPENING HEIGHT
WSWH12x7 WSWH18x7 WSWH24x7	78"	5½"	6'-11½"
		6"	7'-0"
WSWH12x8 WSWH18x8 WSWH24x8	85½"	0"	7'-1½"
	93¼"	5½"	8'-2¾"
		6"	8'-3¼"

NOTES :
1. IF REQUIRED ROUGH OPENING HEIGHT EXCEEDS TABLE VALUE, SPECIFY NEXT TALLER PANEL AND TRIM AS NECESSARY. THE STRONG-WALL® HIGH STRENGTH WOOD SHEARWALL MAY BE TRIMMED TO A MINIMUM HEIGHT OF 74⅛".
2. FURRING DOWN GARAGE HEADER MAY BE REQUIRED FOR CORRECT ROUGH OPENING HEIGHT.

FOR GARAGE WALL OPTION 2, DESIGNER SHALL DESIGN AND DETAIL FOR:
1. SHEAR TRANSFER
2. OUT-OF-PLANE LOADING EFFECT
3. INCREASED OVERTURNING AND DRIFT DUE TO ADDITIONAL HEIGHT

ALTERNATE WSWH GARAGE FRONT OPTIONS | 3

QTY. OF SDS¼"x6" SCREWS REQ'D.	
WSWH12	4
WSWH18	8
WSWH24	16

DESIGNER IS PERMITTED TO MODIFY DETAILS FOR SPECIFIC CONDITIONS.

EDGE DISTANCE FOR SCREWS		
SLOPE	A (in.)	B (in.)
0:12-4:12	2	3
5:12-8:12	1½	4½
9:12-12:12	1½	5½

NOTES :
1. MAINTAIN END DISTANCES TO PREVENT SCREWS FROM PENETRATING THROUGH THE OUTER EDGES.
2. INSTALL SCREWS PERPENDICULAR TO THE TOP PLATE.
3. EDGE DISTANCES ASSUME DOUBLE TOP PLATE.

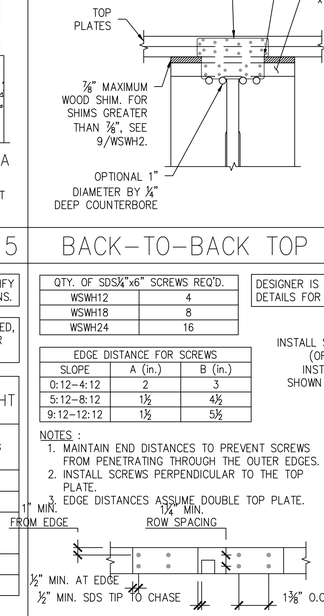

PLAN VIEW
SDS SCREW SPACING

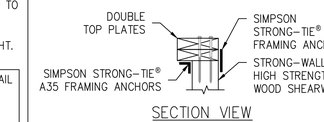

SECTION VIEW
2X6 OR WIDER FRAMING

RAKE WALL | 8

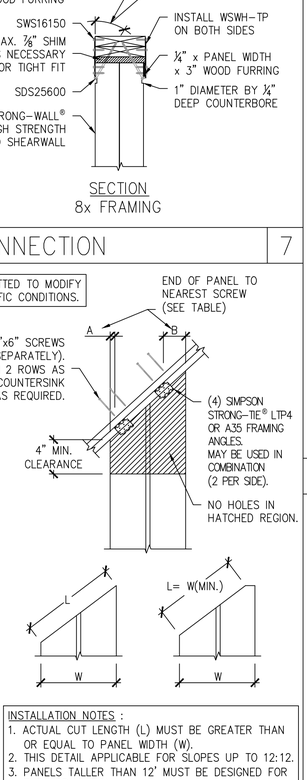

INSTALLATION NOTES :
1. ACTUAL CUT LENGTH (L) MUST BE GREATER THAN OR EQUAL TO PANEL WIDTH (W).
2. THIS DETAIL APPLICABLE FOR SLOPES UP TO 12:12.
3. PANELS TALLER THAN 12' MUST BE DESIGNED FOR THE APPLICATION.

NO.	DATE	REVISIONS
0	11-20-2020	FIRST RELEASE - 2018 IBC
1	03-16-2021	2021 IBC REVISIONS
2	09-27-2023	UPDATED DETAIL 5
3	07-12-2024	UPDATED DETAIL 6,8,10

SIMPSON Strong-Tie, Co. Inc.
• 5956 W. Las Positas Blvd. Pleasanton, CA 94588
• Tel: (800) 999-5099
• Website: www.strongtie.com

SIMPSON Strong-Tie® THERE IS NO EQUAL

STRONG-WALL® WSWH
FRAMING DETAILS
ENGINEERED DESIGNS

SIMPSON Strong-Tie® THERE IS NO EQUAL

NAME	-
DATE	07-12-2024
SCALE	N.T.S.
CHECKED	-
SHEET	WSWH2
OF	SHEETS
JOB NO.	

JOIST DETAILS

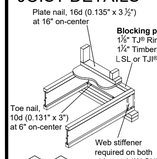

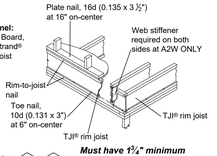



* For additional installation specifications see Rim Board Details and Installation in *Weyerhaeuser Installation Guide for Floor and Roof Framing*, TJ-9001.

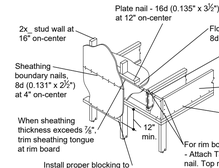

* For additional installation specifications see Rim Board Details and Installation in *Weyerhaeuser Installation Guide for Floor and Roof Framing*, TJ-9001.

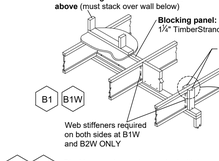

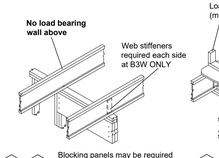

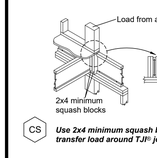

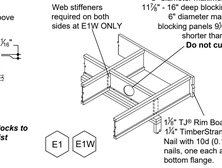

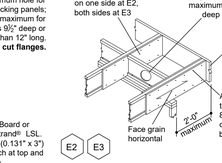

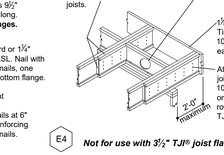

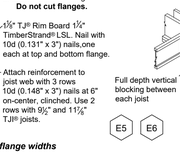

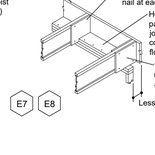

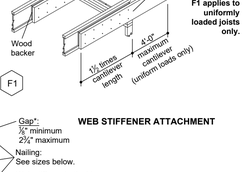

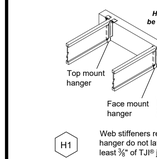

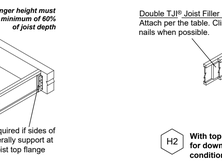

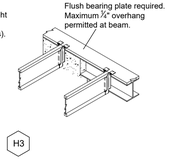

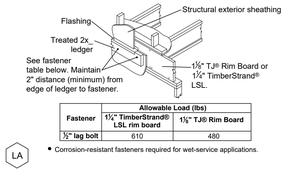

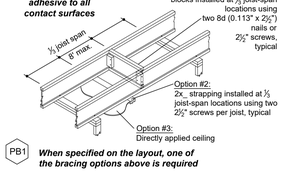

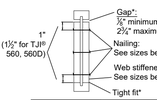

TJI® Joist Series	Depth (in.)	Minimum Web Stiffener Size	Nailing Requirements	
			Type	Number Nails: End	Number Nails: Intermediate
110 210 230 & 360	All All All	⅜" x 2⅝"[(1)] ½" x 2⅝"[(1)] ⅞" x 2⅝"[(1)]	8d (0.113" x 2½")	3	3
560	All	2x4[(2)]	16d (0.135" x 3½")	3	3
560D	18" 20" 22"[(3)] 24"[(3)]	2x4[(2)]	16d (0.135" x 3½")	4 6 6 6	4 5 11 13

(1) PS1 or PS2 sheathing, face grain vertical
(2) Construction grade or better
(3) Web stiffeners are always required for 22" and 24" TJI® 560D Joists

BEAM DETAILS

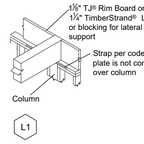

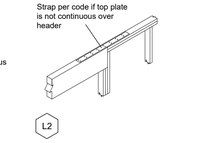

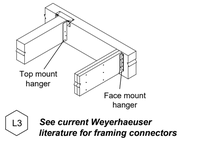

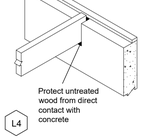

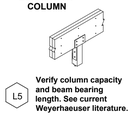

Multiple-Member Connections for Top-Loaded Beams

Fastener Installation Requirements

Piece Width	# of Plies	Fastener Type[(1)]	Min. Length	# Rows	O.C. Spacing	Location
1½"	2	10d nails	3"	3[(2)]	12"	One side
		12d-16d nails	3 ¼"	2[(2)]		
		Screws	3⅜" or 3½"	2	24"	
	3	10d nails	3"	3[(2)]	12"	Both sides
		12d-16d nails	3 ¼"	2[(2)]		
		Screws	3⅜" or 3½"	2	24"	Both sides
			5"			One side
	4	10d nails[(3)]	3"	3[(2)]	12"	One side (per ply)
		12d-16d nails[(3)]	3 ¼"	2[(2)]		
		Screws	5" or 6"	2	24"	Both sides
			6 ¾"			One side
3½"	2	Screws	5" or 6"	2	24"	Both sides
			6 ¾"			One side
		½" bolts	8"	2	24"	-

(1) 10d nails are 0.128" diameter; 12d-16d nails are 0.148" - 0.162" diameter; screws are SDS, SDW, WS, or Truss-LOK-EWP™.
(2) An additional row of nails is required with depths of 14" or greater.
(3) When connecting 4-ply members, nail each ply to the other and offset nail rows by 2" from the rows in the ply below.

When fasteners are required on both sides, stagger fasteners on the second side so they fall halfway between fasteners on the first side.

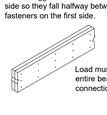

Load must be applied evenly across entire beam width. Otherwise, use connections for side-loaded beams.

L6 Multiple pieces can be nailed or bolted together to form a header or beam of the required size, up to a maximum width of 7"

COLUMN DETAILS



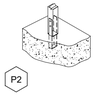

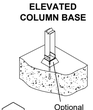

NAILING AT BEARING (FLOOR)

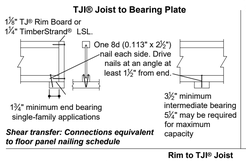

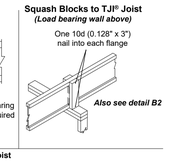

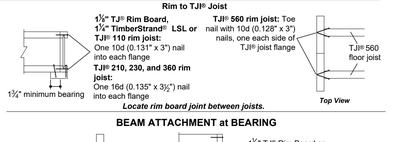

BEAM ATTACHMENT at BEARING

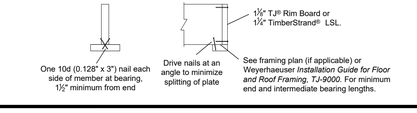

Joist may be shifted up to 3" if floor panel edge is supported and span rating is not exceeded.
Do not cut joist flanges.

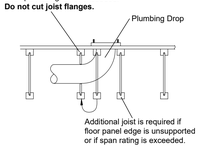

INSTALLATION TIPS

- Subfloor adhesive will improve floor performance, but may not be required.
- Squash blocks and blocking panels carry stacked vertical loads (details B1 and B2). Packing out the web of a TJI® joist (with web stiffeners) is not a substitute for squash blocks or blocking panels.
- When joists are doubled at non-load bearing parallel partitions, space joists apart the width of the wall for plumbing or HVAC.
- Additional joist at plumbing drop (see detail).

FASTENING of FLOOR PANELS

Guidelines for Closest On-Center Spacing per Row

Nail Size	TJI®[(1)(2)] 110, 210, and 230	TJI® 360 and 560	Rim Board: 1⅛" TJI® Rim Board	Rim Board: 1¼" TimberStrand® LSL	1¾" TimberStrand® LSL or wider	Microllams® LVL	Parallams® PSL
8d (0.113" x 2½"), 8d (0.131" x 2½")	4"	3"	6"	4"	3"	3"	3"
10d (0.148" x 3"), 12d (0.148" x 3¼")	4"[(3)]	4"[(3)]	6"	4"	4"	4"	4"
16d (0.162" x 3½")	6"	6"	6"[(4)]	6"[(4)]	6"[(4)]	8"	6"

(1) Stagger nails when using 4" on-center spacing and maintain 1½" joist and panel edge distance. One row of fasteners is permitted (two at abutting panel edges) for diaphragms. Fastener spacing for TJI® joists in diaphragm applications cannot be less than shown in table. When fastener spacing for blocking is less than spacing shown above, rectangular blocking must be used in lieu of TJI® joists.
(2) For non-diaphragm applications, multiple rows of fasteners are permitted if the rows are offset at least ½" and staggered.
(3) With 10d (0.148" x 1½") nails, spacing can be reduced to 3" on-center for light gauge steel straps.
(4) Can be reduced to 4" on-center if nail penetration into the narrow edge is no more than 1½" (to avoid splitting).
(5) Can be reduced to 5" on-center if nail penetration into the narrow edge is no more than 1½" (to avoid splitting).
■ Recommended nailing is 12" on-center in field and 6" on-center along panel edge. Fastening requirements on engineered drawings supersede recommendations listed above.
■ For recommended nailing and adhesives, see INSTALLATION RECOMMENDATIONS on page 2 of the *Weyerhaeuser Installation Guide for Floor and Roof Framing, TJ-9001.*
■ Nailing rows must be offset at least ½" and staggered.
■ 14 ga. staples may be substituted for 8d (0.113" x 2½") nails if minimum penetration of 1" into the TJI® joist or rim board is achieved.
■ Maximum nail spacing for TJI® joists is 18" on-center.

FILLER and BACKER BLOCK SIZES

TJI® Joists	110		210		230 or 360			560	
Depth	9½" or 11⅞"	14"	9½" or 11⅞"	14" or 16"	9½" or 11⅞"	14" or 16"	18" or 20"	11⅞"	14" or 16"	18" or 20"
Filler Block [(1)] (Detail H2)	2x6	2x8	2x6 + ½" sheathing	2x8 + ½" sheathing	2x6 + ½" sheathing	2x8 + ½" sheathing	2x12 + ½" sheathing	Two 2x6	Two 2x8	Two 2x12
Cantilever Filler (Detail E4)	2x6 4'-0" long	2x10 6'-0" long	2x6 + ¾" sheathing 4'-0" long	2x10 + ¾" sheathing 6'-0" long	2x6 + ½" sheathing 4'-0" long	2x10 + ½" sheathing 6'-0" long	Not applicable	Not applicable		
Backer Block [(1)] (Detail F1 or H2)	½" or ¾"		¾" or ½"		¼" or 1" Net			2x6	2x8	2x12

(1) If necessary, increase filler and backer block height for face mount hangers and maintain ½" gap at top of joist; see detail W. Filler and backer block dimensions should accomodate required nailing without splitting (1½" minimum for backer blocks and 2¼" minimum for filler blocks).

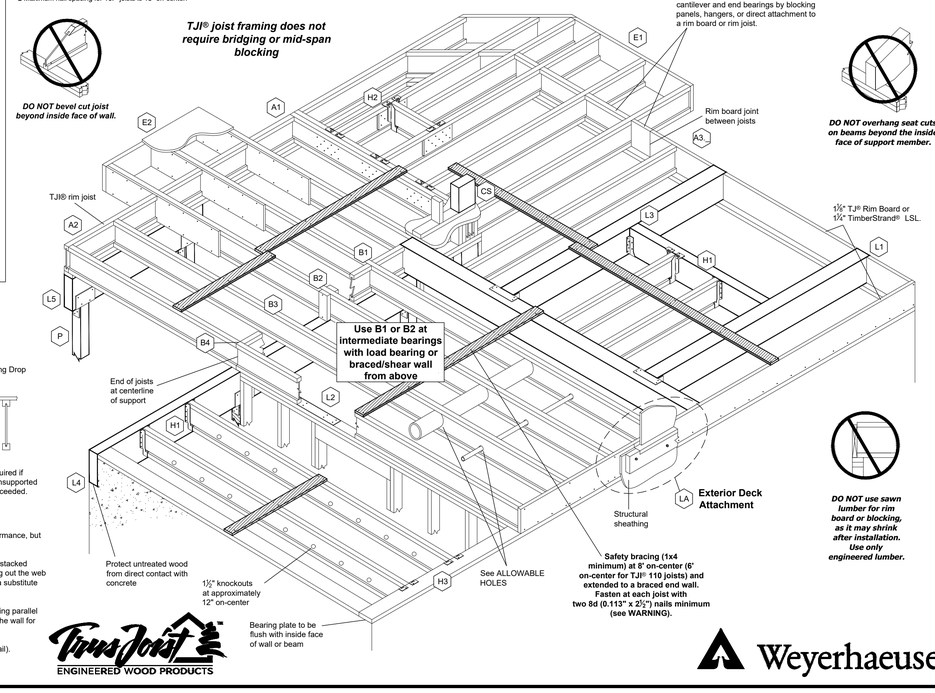

TrusJoist ENGINEERED WOOD PRODUCTS

Weyerhaeuser

ALLOWABLE HOLES - TJI® Joists

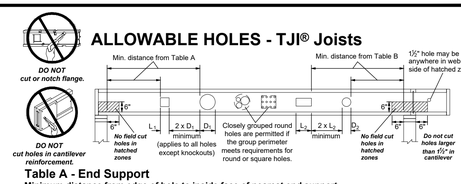

Table A - End Support

Minimum distance from edge of hole to inside face of nearest end support

JOIST DEPTH	TJI®	ROUND HOLE SIZE 2"	3"	4"	5"	6½"	7"	8¼"	11"	13"	SQUARE OR RECTANGULAR HOLE SIZE 2"	3"	4"	5"	6½"	7"	8¼"	11"	13"
9½"	110	1'-0"	1'-6"	2'-0"	3'-2"	5'-0"					1'-0"	1'-6"	2'-0"	3'-2"	4'-6"				
	210	1'-0"	1'-6"	2'-0"	3'-2"	5'-0"					1'-0"	2'-0"	2'-6"	4'-0"	5'-0"				
	230	1'-0"	2'-0"	2'-6"	3'-6"	5'-6"					1'-0"	2'-0"	3'-0"	4'-6"	5'-0"				
	360	1'-6"	2'-0"	3'-0"	4'-0"	6'-0"					1'-6"	2'-6"	3'-6"	5'-0"	5'-6"				
	560	1'-6"	2'-6"	3'-6"	5'-0"	7'-0"					2'-0"	3'-0"	4'-0"	5'-6"	6'-6"				
11⅞"	110	1'-0"	1'-0"	1'-6"	2'-2"	2'-6"	3'-0"	5'-8"			1'-0"	1'-6"	2'-2"	2'-6"	4'-6"	5'-0"	6'-0"		
	210	1'-0"	1'-0"	1'-6"	2'-2"	3'-0"	3'-6"	6'-0"			1'-0"	1'-6"	2'-2"	3'-0"	5'-0"	5'-6"	6'-6"		
	230	1'-0"	1'-0"	1'-6"	2'-2"	3'-0"	3'-6"	6'-6"			1'-0"	2'-0"	2'-6"	3'-6"	5'-6"	5'-6"	7'-0"		
	360	1'-6"	2'-0"	3'-0"	3'-6"	4'-6"	5'-0"	7'-0"			1'-6"	2'-6"	3'-6"	4'-6"	6'-6"	6'-6"	7'-6"		
	560	1'-6"	2'-6"	3'-6"	4'-6"	5'-6"	6'-0"	8'-0"			2'-0"	3'-0"	4'-0"	5'-6"	7'-6"	7'-6"	8'-6"		
14"	110	1'-0"	1'-0"	1'-0"	1'-2"	1'-6"	2'-0"	4'-0"	6'-0"		1'-0"	1'-0"	1'-2"	1'-6"	3'-0"	4'-0"	5'-0"	7'-0"	8'-0"
	210	1'-0"	1'-0"	1'-0"	1'-2"	1'-6"	2'-0"	4'-0"	6'-0"		1'-0"	1'-0"	1'-2"	1'-6"	3'-0"	4'-0"	5'-0"	7'-0"	8'-0"
	230	1'-0"	1'-0"	1'-0"	1'-2"	1'-6"	2'-0"	4'-0"	6'-0"		1'-0"	1'-0"	1'-2"	1'-6"	3'-0"	4'-0"	5'-0"	7'-0"	9'-0"
	360	1'-0"	1'-0"	1'-0"	1'-2"	1'-6"	2'-0"	4'-0"	6'-0"		1'-0"	1'-0"	1'-2"	1'-6"	3'-0"	4'-0"	5'-0"	7'-0"	9'-0"
	560	1'-0"	1'-0"	1'-0"	1'-2"	1'-6"	2'-0"	4'-0"	6'-0"		1'-0"	1'-0"	1'-2"	1'-6"	3'-0"	4'-0"	5'-0"	7'-0"	9'-0"
16"	110	1'-0"	1'-0"	1'-0"	1'-0"	1'-2"	1'-4"	3'-4"	5'-0"		1'-0"	1'-0"	1'-0"	1'-2"	2'-6"	3'-4"	4'-2"	6'-0"	7'-0"
	210	1'-0"	1'-0"	1'-0"	1'-0"	1'-2"	1'-4"	3'-4"	5'-0"		1'-0"	1'-0"	1'-0"	1'-2"	2'-6"	3'-4"	4'-2"	6'-0"	7'-0"
	230	1'-0"	1'-0"	1'-0"	1'-0"	1'-2"	1'-4"	3'-4"	5'-0"		1'-0"	1'-0"	1'-0"	1'-2"	2'-6"	3'-4"	4'-2"	6'-0"	7'-0"
	360	1'-0"	1'-0"	1'-0"	1'-0"	1'-2"	1'-4"	3'-4"	5'-0"		1'-0"	1'-0"	1'-0"	1'-2"	2'-6"	3'-4"	4'-2"	6'-0"	7'-0"
	560	1'-0"	1'-0"	1'-0"	1'-0"	1'-2"	1'-4"	3'-4"	5'-0"	7'-6"	1'-0"	1'-0"	1'-0"	1'-2"	2'-6"	3'-4"	4'-2"	6'-0"	7'-0"
		4"	5"	6"	7"	8"	10"	12"	15"	17"	4"	5"	6"	7"	8"	10"	12"	15"	17"
18"	360	1'-0"	1'-0"	1'-0"	1'-0"	1'-0"	1'-2"	2'-0"	4'-0"	5'-0"	1'-0"	1'-0"	1'-0"	1'-0"	1'-0"	1'-2"	2'-0"	4'-0"	5'-0"
	560	1'-0"	1'-0"	1'-0"	1'-0"	1'-0"	1'-2"	2'-0"	4'-0"	5'-0"	1'-0"	1'-0"	1'-0"	1'-0"	1'-0"	1'-2"	2'-0"	4'-0"	5'-0"
20"	360	1'-0"	1'-0"	1'-0"	1'-0"	1'-0"	1'-2"	2'-0"	4'-0"	5'-0"	1'-0"	1'-0"	1'-0"	1'-0"	1'-0"	1'-2"	2'-0"	4'-0"	5'-0"
	560	1'-0"	1'-0"	1'-0"	1'-0"	1'-0"	1'-2"	2'-0"	4'-0"	5'-0"	1'-0"	1'-0"	1'-0"	1'-0"	1'-0"	1'-2"	2'-0"	4'-0"	5'-0"

Table B - Intermediate or Cantilever Support

Minimum distance from edge of hole to inside face of nearest intermediate or cantilever support

JOIST DEPTH	TJI®	ROUND HOLE SIZE 2"	3"	4"	5"	6½"	7"	8¼"	11"	13"	SQUARE OR RECTANGULAR HOLE SIZE 2"	3"	4"	5"	6½"	7"	8¼"	11"	13"
9½"	110	1'-0"	2'-0"	2'-6"	3'-6"	5'-6"	6'-6"				1'-0"	2'-0"	2'-6"	3'-6"	5'-6"	6'-6"			
	210	2'-0"	2'-6"	3'-6"	5'-0"	6'-6"					2'-0"	3'-0"	4'-0"	5'-0"	6'-6"	7'-6"			
	230	2'-6"	3'-0"	4'-0"	5'-6"	6'-6"					2'-0"	3'-6"	4'-0"	5'-6"	6'-6"	7'-6"			
	360	3'-0"	3'-6"	4'-0"	5'-6"	6'-6"	7'-6"				3'-0"	4'-0"	4'-6"	5'-6"	6'-6"	7'-6"			
	560	3'-6"	5'-0"	6'-0"	7'-6"	10'-0"					4'-0"	5'-6"	6'-6"	8'-0"	9'-0"				
11⅞"	110	1'-0"	1'-0"	1'-6"	2'-6"	4'-0"	4'-8"	8'-8"			1'-0"	1'-0"	1'-6"	2'-6"	4'-0"	7'-0"	9'-8"		
	210	1'-0"	2'-0"	2'-6"	3'-6"	5'-0"	5'-6"	9'-0"			1'-0"	2'-0"	2'-6"	3'-6"	5'-0"	8'-0"	10'-0"		
	230	1'-0"	2'-0"	2'-6"	3'-6"	5'-0"	5'-6"	10'-0"			1'-0"	2'-0"	2'-6"	3'-6"	5'-0"	8'-6"	10'-6"		
	360	2'-0"	3'-0"	4'-0"	5'-0"	6'-6"	7'-0"	11'-0"			2'-0"	3'-0"	3'-6"	5'-0"	7'-0"	9'-0"	11'-0"		
	560	3'-0"	4'-6"	5'-6"	6'-6"	8'-6"	12'-0"				3'-0"	4'-6"	6'-0"	6'-6"	8'-6"	11'-0"	12'-0"		
14"	110	1'-0"	1'-0"	1'-0"	2'-0"	2'-6"	3'-0"	8'-6"			1'-0"	1'-0"	1'-0"	2'-0"	2'-6"	3'-0"	8'-6"		
	210	1'-0"	1'-0"	1'-0"	2'-0"	2'-6"	3'-0"	9'-6"			1'-0"	1'-0"	1'-0"	2'-0"	2'-6"	3'-0"	9'-6"		
	230	1'-0"	1'-0"	1'-0"	2'-0"	2'-6"	3'-0"	10'-4"			1'-0"	1'-0"	1'-0"	2'-0"	2'-6"	4'-0"	10'-4"		
	360	1'-0"	1'-0"	1'-0"	2'-0"	3'-0"	3'-6"	11'-0"			1'-0"	1'-0"	1'-0"	2'-0"	3'-0"	4'-0"	11'-0"		
	560	1'-0"	1'-0"	1'-0"	2'-0"	3'-0"	4'-0"	13'-4"			1'-0"	1'-0"	1'-0"	2'-0"	3'-0"	4'-6"	13'-4"		
16"	110	1'-0"	1'-0"	1'-0"	1'-0"	2'-0"	2'-6"	8'-6"	10'-6"	12'-6"	1'-0"	1'-0"	1'-0"	1'-0"	2'-0"	2'-6"	8'-6"	10'-6"	12'-6"
	210	1'-0"	1'-0"	1'-0"	1'-0"	2'-0"	2'-6"	9'-6"	11'-6"	13'-6"	1'-0"	1'-0"	1'-0"	1'-0"	2'-0"	2'-6"	9'-6"	11'-6"	13'-6"
	230	1'-0"	1'-0"	1'-0"	1'-0"	2'-0"	2'-6"	10'-4"	12'-4"	14'-4"	1'-0"	1'-0"	1'-0"	1'-0"	2'-0"	2'-6"	10'-4"	12'-4"	14'-4"
	360	1'-0"	1'-0"	1'-0"	1'-0"	2'-0"	2'-6"	11'-0"	13'-0"	15'-0"	1'-0"	1'-0"	1'-0"	1'-0"	2'-0"	2'-6"	11'-0"	13'-0"	15'-0"
	560	1'-0"	1'-0"	1'-0"	1'-0"	2'-0"	2'-6"	13'-4"	15'-4"	17'-4"	1'-0"	1'-0"	1'-0"	1'-0"	2'-0"	2'-6"	13'-4"	15'-4"	17'-4"
		4"	5"	6"	7"	8"	10"	12"	15"	17"	4"	5"	6"	7"	8"	10"	12"	15"	17"
18"	360	1'-0"	1'-0"	1'-0"	1'-0"	1'-0"	1'-2"	2'-0"	4'-0"	5'-0"	1'-0"	1'-0"	1'-0"	1'-0"	1'-0"	1'-2"	2'-0"	4'-0"	5'-0"
	560	1'-0"	1'-0"	1'-0"	1'-0"	1'-0"	1'-2"	2'-0"	4'-0"	5'-0"	1'-0"	1'-0"	1'-0"	1'-0"	1'-0"	1'-2"	2'-0"	4'-0"	5'-0"
20"	360	1'-

GENERAL NOTES

1. BRANCH CIRCUIT SIZES - MAX 3% VOLT DROP BRANCH CIRCUIT WIRING SHALL BE SIZED BY THE CONTRACTOR TO MEET THE 2022 CA BUILDING ENERGY EFFICIENCY STANDARDS OF 3% MAXIMUM DROP, WITH THE FOLLOWING CRITERIA:
   A. MAXIMUM DESIGN CURRENT ON 15A AND 20A BRANCH CIRCUITS (INCLUDING 75% DERATING) = 12 AMPS.
   B. MAXIMUM DISTANCE TO CENTROID (OR WEIGHTED CENTER, DETERMINED BY APPROXIMATING THE MIDPOINT BETWEEN ALL OF THE LOADS) OF BRANCH CIRCUIT LOADS FOR EACH SIZE WIRE (COPPER):
      i. 120V: #12 = 80FT, #10 = 125FT, #8 = 200FT, #6 = 300FT
      ii. 208V: #12 = 135FT, #10 = 215FT, #8 = 340FT, #6 = 530FT
      iii. 240V: #12 = 155FT, #10 = 250FT, #8 = 400FT, #6 = 600FT
      iv. 277V: #12 = 180FT, #10 = 290FT, #8 = 460FT, #6 = 700FT
   B. SELECT CONDUCTOR SIZES THAT WILL NOT EXCEED THE ONE-WAY CIRCUIT DISTANCES NOTED ABOVE TO THE CENTROID OF THE CIRCUIT LOADS, WITH THE CIRCUIT DISTANCE TO INCLUDE UP AND DOWN LENGTHS TO THE CEILING OR UNDERFLOOR SPACES. THE WHOLE BRANCH CIRCUIT SHALL CONSIST OF THE SAME CONDUCTOR SIZES UNLESS CONTRACTOR-PROVIDED CALCULATIONS INDICATE THE LAST DEVICE ON EACH CIRCUIT BRANCH WILL NOT EXCEED 3% VOLT DROP. FOR CONDUCTOR SIZES REQUIRED TO BE LARGER THAN #10, INSTALL INLINE HEAT-SHRUNK SPLICES IN RESPECTIVE PANELBOARD OR OUTLET BOX.

2. COORDINATE THE REQUIREMENTS FOR UTILITY COMPANY SERVICES WITH THE ELECTRIC, TELEPHONE AND CABLE TV COMPANIES. OBTAIN THEIR ENGINEERED DRAWINGS AND PROVIDE ALL REQUIRED LABOR AND MATERIALS. REFER TO SPECIFICATION SECTION 26 00 00 FOR ADDITIONAL UTILITY COORDINATION REQUIREMENTS.

3. PLAN TRENCHING AND UNDERGROUND PULLBOX LOCATIONS TO COINCIDE WITH LANDSCAPE AREAS OR AREAS AS NOTED ON THE DRAWINGS; INSTALL PULLBOXES MINIMUM 36" FROM STORM DRAIN INLETS AND SIMILAR UTILITIES. OBTAIN APPROVAL FROM THE ARCHITECT FOR FINAL TRENCH AND PULLBOX LOCATIONS PRIOR TO INSTALLATION.

4. MINIMUM SIZE OF SITE CONDUIT AND WIRING IS 1"C. #10AWG.

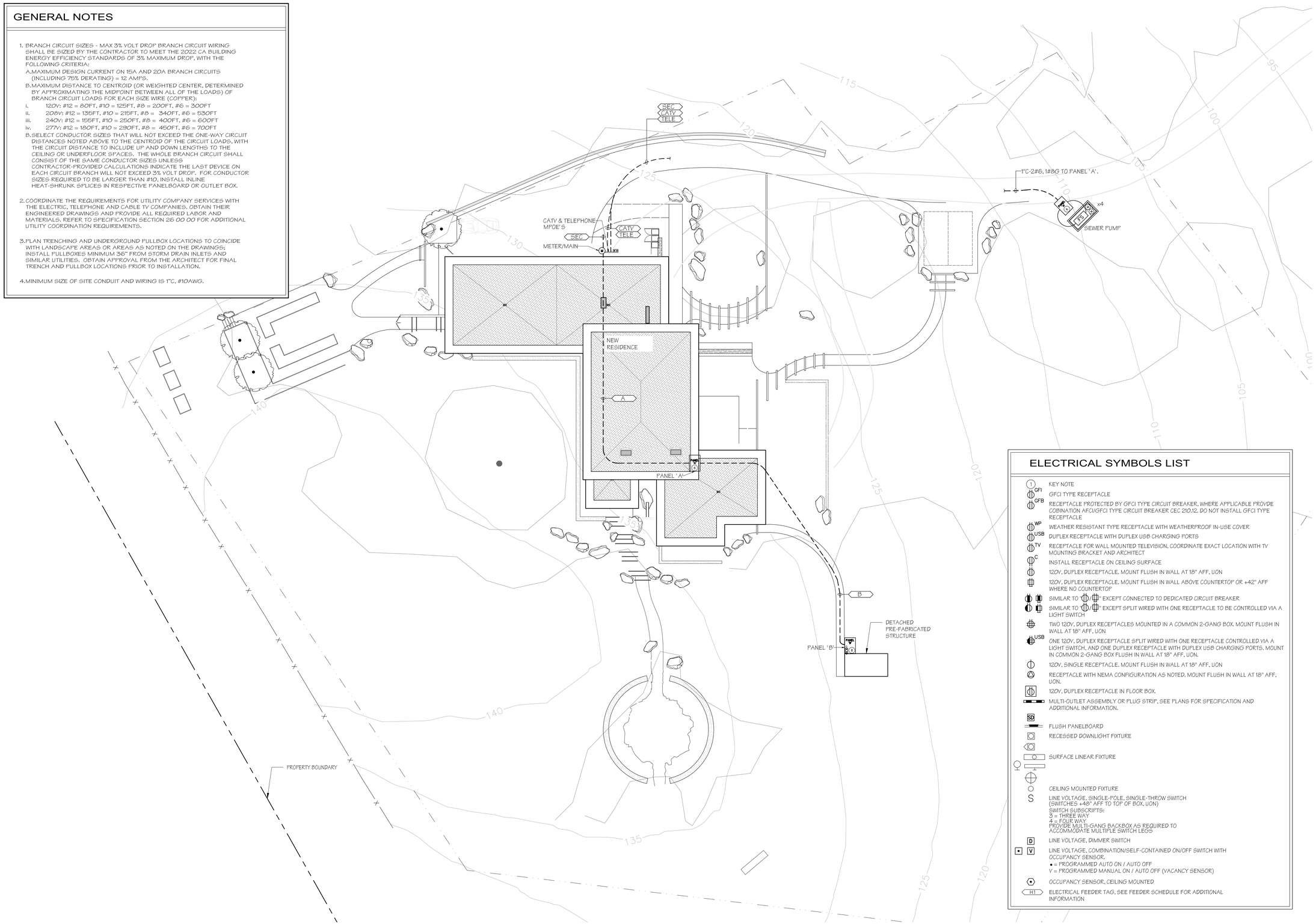

ELECTRICAL SYMBOLS LIST

- (1) KEY NOTE
- GFI — GFCI TYPE RECEPTACLE
- GFB — RECEPTACLE PROTECTED BY GFCI TYPE CIRCUIT BREAKER, WHERE APPLICABLE PROVDE COBINATION AFCI/GFCI TYPE CIRCUIT BREAKER CEC 210.12. DO NOT INSTALL GFCI TYPE RECEPTACLE
- WP — WEATHER RESISTANT TYPE RECEPTACLE WITH WEATHERPROOF IN-USE COVER
- USB — DUPLEX RECEPTACLE WITH DUPLEX USB CHARGING PORTS
- TV — RECEPTACLE FOR WALL MOUNTED TELEVISION, COORDINATE EXACT LOCATION WITH TV MOUNTING BRACKET AND ARCHITECT
- C — INSTALL RECEPTACLE ON CEILING SURFACE
- 120V, DUPLEX RECEPTACLE, MOUNT FLUSH IN WALL AT 18" AFF, UON
- 120V, DUPLEX RECEPTACLE, MOUNT FLUSH IN WALL ABOVE COUNTERTOP OR +42" AFF WHERE NO COUNTERTOP
- SIMILAR TO "⏚" EXCEPT CONNECTED TO DEDICATED CIRCUIT BREAKER
- SIMILAR TO "⏚" EXCEPT SPLIT WIRED WITH ONE RECEPTACLE TO BE CONTROLLED VIA A LIGHT SWITCH
- TWO 120V, DUPLEX RECEPTACLES MOUNTED IN A COMMON 2-GANG BOX. MOUNT FLUSH IN WALL AT 18" AFF, UON
- USB — ONE 120V, DUPLEX RECEPTACLE SPLIT WIRED WITH ONE RECEPTACLE CONTROLLED VIA A LIGHT SWITCH, AND ONE DUPLEX RECEPTACLE WITH DUPLEX USB CHARGING PORTS. MOUNT IN COMMON 2-GANG BOX FLUSH IN WALL AT 18" AFF, UON.
- 120V, SINGLE RECEPTACLE. MOUNT FLUSH IN WALL AT 18" AFF, UON
- RECEPTACLE WITH NEMA CONFIGURATION AS NOTED. MOUNT FLUSH IN WALL AT 18" AFF, UON.
- 120V, DUPLEX RECEPTACLE IN FLOOR BOX.
- MULTI-OUTLET ASSEMBLY OR PLUG STRIP, SEE PLANS FOR SPECIFICATION AND ADDITIONAL INFORMATION.
- SD — FLUSH PANELBOARD
- RECESSED DOWNLIGHT FIXTURE
- SURFACE LINEAR FIXTURE
- CEILING MOUNTED FIXTURE
- S — LINE VOLTAGE, SINGLE-POLE, SINGLE-THROW SWITCH (SWITCHES +48" AFF TO TOP OF BOX, UON)
  SWITCH SUBSCRIPTS:
  3 = THREE WAY
  4 = FOUR WAY
  PROVIDE MULTI-GANG BACKBOX AS REQUIRED TO ACCOMMODATE MULTIPLE SWITCH LEGS
- D — LINE VOLTAGE, DIMMER SWITCH
- V — LINE VOLTAGE, COMBINATION/SELF-CONTAINED ON/OFF SWITCH WITH OCCUPANCY SENSOR.
  • = PROGRAMMED AUTO ON / AUTO OFF
  V = PROGRAMMED MANUAL ON / AUTO OFF (VACANCY SENSOR)
- OCCUPANCY SENSOR, CEILING MOUNTED
- H1 — ELECTRICAL FEEDER TAG, SEE FEEDER SCHEDULE FOR ADDITIONAL INFORMATION

ELECTRIC SITE PLAN
SCALE: 1/16" = 1'-0" (1)

N TRUE NORTH

signum architecture

JUANCARLOS FERNANDEZ
PROJECT DESIGNER

SIGNUM ARCHITECTURE, LLP 707 963 8831
1675 2nd St, Napa, CA 94559

These drawings are the property of Signum Architecture and have been prepared specifically for this project. These drawings are not to be used for any other project, by any other entity or in another location.

CARMEL
SERWIN RESIDENCE

24 TEHAMA
CARMEL, CA 93923
APN 165-421-045

PROJECT NUMBER	2314
DATE	08/23/24
CHECKED BY	JCF
DRAWN BY	AVH
SCALE	AS NOTED

REVISIONS

DESIGN REVIEW STEP 2A/B	06/20/2024
100% SCHEMATIC DESIGN	08/07/2024
DESIGN REVIEW STEP 3	08/23/2024
DESIGN REVIEW STEP 4	01/22/2025

SHEET NAME

ELECTRIC SITE PLAN

SHEET NUMBER

E1.01

DESIGN REVIEW

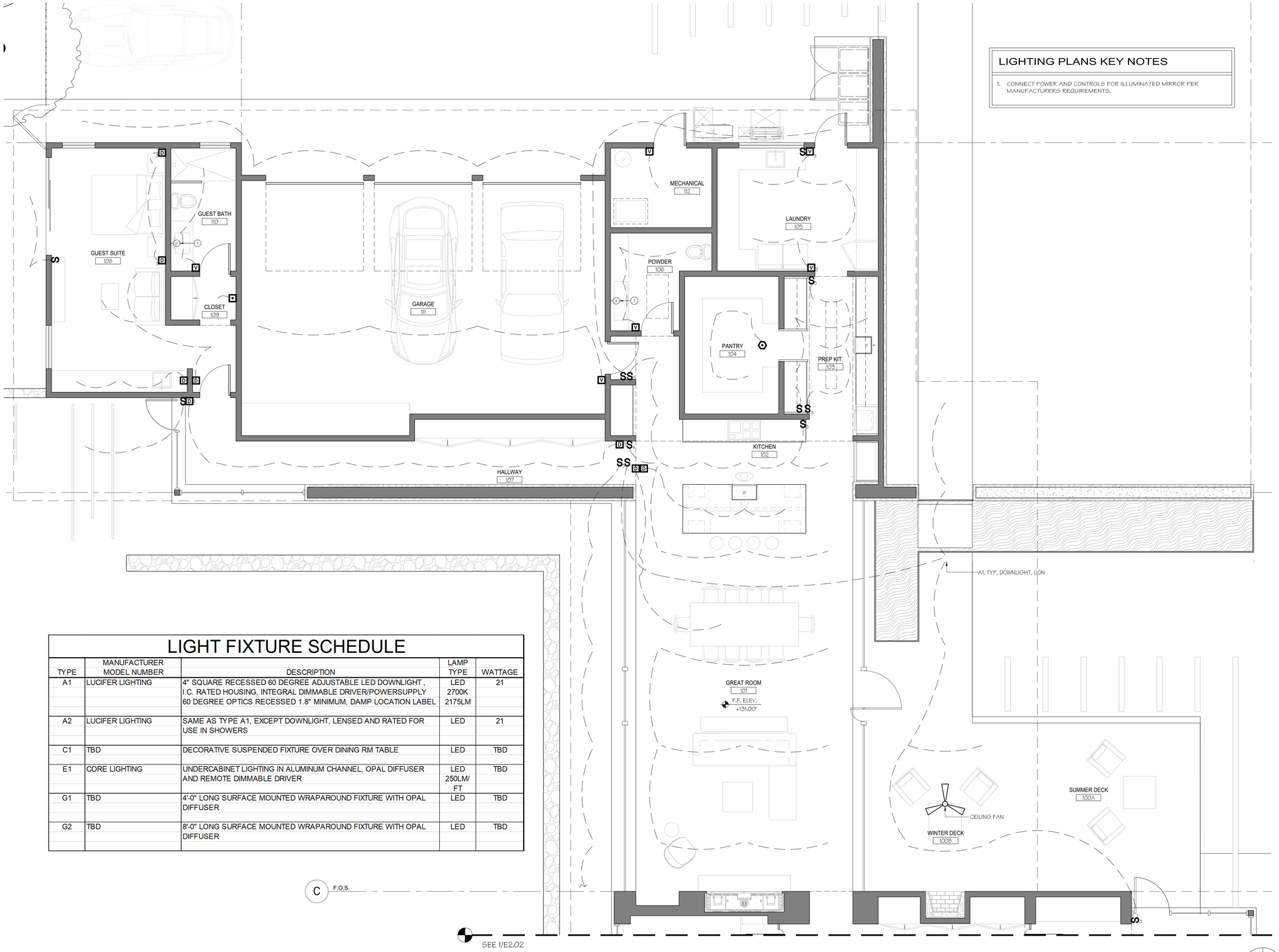

LIGHTING PLANS KEY NOTES

1. CONNECT POWER AND CONTROLS FOR ILLUMINATED MIRROR PER MANUFACTURERS REQUIREMENTS.

LIGHT FIXTURE SCHEDULE

TYPE	MANUFACTURER MODEL NUMBER	DESCRIPTION	LAMP TYPE	WATTAGE
A1	LUCIFER LIGHTING	4" SQUARE RECESSED 60 DEGREE ADJUSTABLE LED DOWNLIGHT , I.C. RATED HOUSING, INTEGRAL DIMMABLE DRIVER/POWERSUPPLY 60 DEGREE OPTICS RECESSED 1.8" MINIMUM, DAMP LOCATION LABEL	LED 2700K 2175LM	21
A2	LUCIFER LIGHTING	SAME AS TYPE A1, EXCEPT DOWNLIGHT, LENSED AND RATED FOR USE IN SHOWERS	LED	21
C1	TBD	DECORATIVE SUSPENDED FIXTURE OVER DINING RM TABLE	LED	TBD
E1	CORE LIGHTING	UNDERCABINET LIGHTING IN ALUMINUM CHANNEL, OPAL DIFFUSER AND REMOTE DIMMABLE DRIVER	LED 250LM/ FT	TBD
G1	TBD	4'-0" LONG SURFACE MOUNTED WRAPAROUND FIXTURE WITH OPAL DIFFUSER	LED	TBD
G2	TBD	8'-0" LONG SURFACE MOUNTED WRAPAROUND FIXTURE WITH OPAL DIFFUSER	LED	TBD

LIGHTING PLAN 1
SCALE: 1/4" = 1'-0"

N TRUE NORTH

signum architecture

JUANCARLOS FERNANDEZ
PROJECT DESIGNER

SIGNUM ARCHITECTURE, LLP 707 963 8831
1675 2nd St, Napa, CA 94559

These drawings are the property of Signum Architecture and have been prepared specifically for this project. These drawings are not to be used for any other project, by any other entity or in another location.

CARMEL SERWIN RESIDENCE

24 TEHAMA
CARMEL, CA 93923
APN 169-421-045

PROJECT NUMBER	2314
DATE	01/31/2025
CHECKED BY	JCF
DRAWN BY	AVH
SCALE	AS NOTED

REVISIONS

100% SCHEMATIC DESIGN	08/07/2024
DESIGN REVIEW STEP 4	01/22/2025
BUILDING PERMIT	01/31/2025

SHEET NAME

LIGHTING PLAN
GREAT ROOM &
GUEST WING

SHEET NUMBER

E2.01

BUILDING PERMIT

LIGHTING PLAN GENERAL NOTES

1. BRANCH CIRCUIT SIZES - MAX 3% VOLT DROP BRANCH CIRCUIT WIRING SHALL BE SIZED BY THE CONTRACTOR TO MEET THE 2022 CA BUILDING ENERGY EFFICIENCY STANDARDS OF 3% MAXIMUM DROP, WITH THE FOLLOWING CRITERIA:

   A. MAXIMUM DESIGN CURRENT ON 15A AND 20A BRANCH CIRCUITS (INCLUDING 75% DERATING) = 12 AMPS.
   B. MAXIMUM DISTANCE TO CENTROID (OR WEIGHTED CENTER, DETERMINED BY APPROXIMATING THE MIDPOINT BETWEEN ALL OF THE LOADS) OF BRANCH CIRCUIT LOADS FOR EACH SIZE WIRE (COPPER):
   i. 120V: #12 = 80FT, #10 = 125FT, #8 = 200FT, #6 = 300FT
   ii. 208V: #12 = 135FT, #10 = 215FT, #8 = 340FT, #6 = 530FT
   iii. 240V: #12 = 155FT, #10 = 250FT, #8 = 400FT, #6 = 600FT
   iv. 277V: #12 = 180FT, #10 = 290FT, #8 = 450FT, #6 = 700FT

   C. SELECT CONDUCTOR SIZES THAT WILL NOT EXCEED THE ONE-WAY CIRCUIT DISTANCES NOTED ABOVE TO THE CENTROID OF THE CIRCUIT LOADS, WITH THE CIRCUIT DISTANCE TO INCLUDE UP AND DOWN LENGTHS TO THE CEILING OR UNDERFLOOR SPACES. THE WHOLE BRANCH CIRCUIT SHALL CONSIST OF THE SAME CONDUCTOR SIZES UNLESS CONTRACTOR-PROVIDED CALCULATIONS INDICATE THE LAST DEVICE ON EACH CIRCUIT BRANCH WILL NOT EXCEED 3% VOLT DROP. FOR CONDUCTOR SIZES REQUIRED TO BE LARGER THAN #10, INSTALL INLINE HEAT-SHRUNK SPLICES IN RESPECTIVE PANELBOARD OR OUTLET BOX.

2. ALL PERMANENTLY INSTALLED LUMINAIRES MUST QUALIFY AS "HIGH EFFICACY LUMINAIRES" INCLUDING FLUORESCENT, GU-24 SOCKETS, AND LUMINAIRES CONTAINING A JA8 COMPLIANT LAMP. RECESSED DOWNLIGHTS WITH SCREW BASED SOCKETS ARE NOT PERMITTED.
3. AT LEAST ONE LUMINAIRE IN THE FOLLOWING ROOMS SHALL BE CONTROLLED WITH A VACANCY SENSOR: BATHROOMS, UTILITY ROOMS, LAUNDRY ROOMS AND GARAGES.
4. LUMINAIRES RECESSED INTO CEILINGS SHALL BE LISTED FOR ZERO CLEARANCE INSULATION, LABELLED THAT CERTIFIES THE LUMINAIRE IS AIRTIGHT WITH A LEAKAGE SEAL LESS THAN 2.0CFM AT 75 PASCALS, SEALED WITH A GASKET OR CAULK AND ALLOW LAMP REPLACEMENT AND MAINTENANCE TO BE READILY ACCESSIBLE FROM BELOW THE CEILING WITHOUT CUTTING HOLES IN THE CEILING.
5. ALL LUMINARIES THAT ARE INSTALLED WITH JA8-CERTIFIED LIGHT SOURCES ARE REQUIRED TO BE CONTROLLED BY EITHER A DIMMER OR VACANCY SENSOR. CLOSETS LESS THAN 70 S.F. ARE EXEMPT FROM THIS REQUIREMENT.
6. PROVIDE DIMMERS THAT ARE APPROVED TO PROPERLY DIM THE RESPECTIVE LED DRIVERS. COORDINATE THE REQUIRED DIMMER TYPE WITH THE APPROVED LIGHT FIXTURE SUBMITTAL.
7. REFER TO ARCHITECTURAL DRAWINGS FOR EXACT LOCATION AND MOUNTING HEIGHTS OF LIGHT FIXTURES.
8. PROVIDE DEDICATED NEUTRAL TO EACH BRANCH CIRCUIT PER CEC.

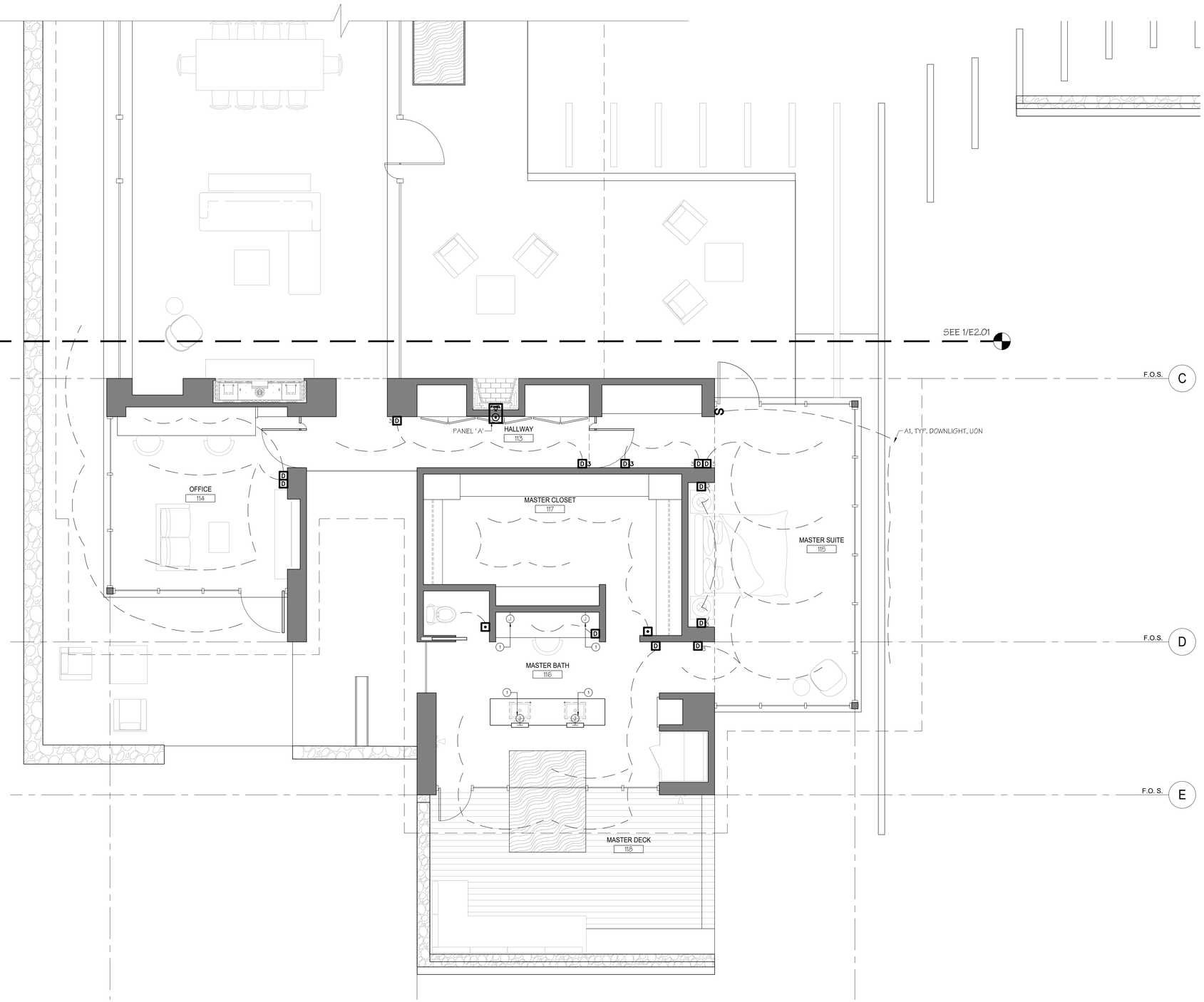

LIGHTING PLAN 1
SCALE: 1/4" = 1'-0"

N
TRUE NORTH

signum architecture

JUANCARLOS FERNANDEZ
PROJECT DESIGNER

SIGNUM ARCHITECTURE, LLP 707 963 8831
1675 2nd St, Napa, CA 94559

These drawings are the property of Signum Architecture and have been prepared specifically for this project. These drawings are not to be used for any other project, by any other entity or in another location.

CARMEL
SERWIN RESIDENCE

24 TEHAMA
CARMEL, CA 93923
APN 169-421-045

PROJECT NUMBER	2314
DATE	01/31/2025
CHECKED BY	JCF
DRAWN BY	AVH
SCALE	AS NOTED

REVISIONS

100% SCHEMATIC DESIGN	08/07/2024
DESIGN REVIEW STEP 4	01/22/2025
BUILDING PERMIT	01/31/2025

SHEET NAME

LIGHTING PLAN
MASTER WING

SHEET NUMBER

E2.02

BUILDING PERMIT

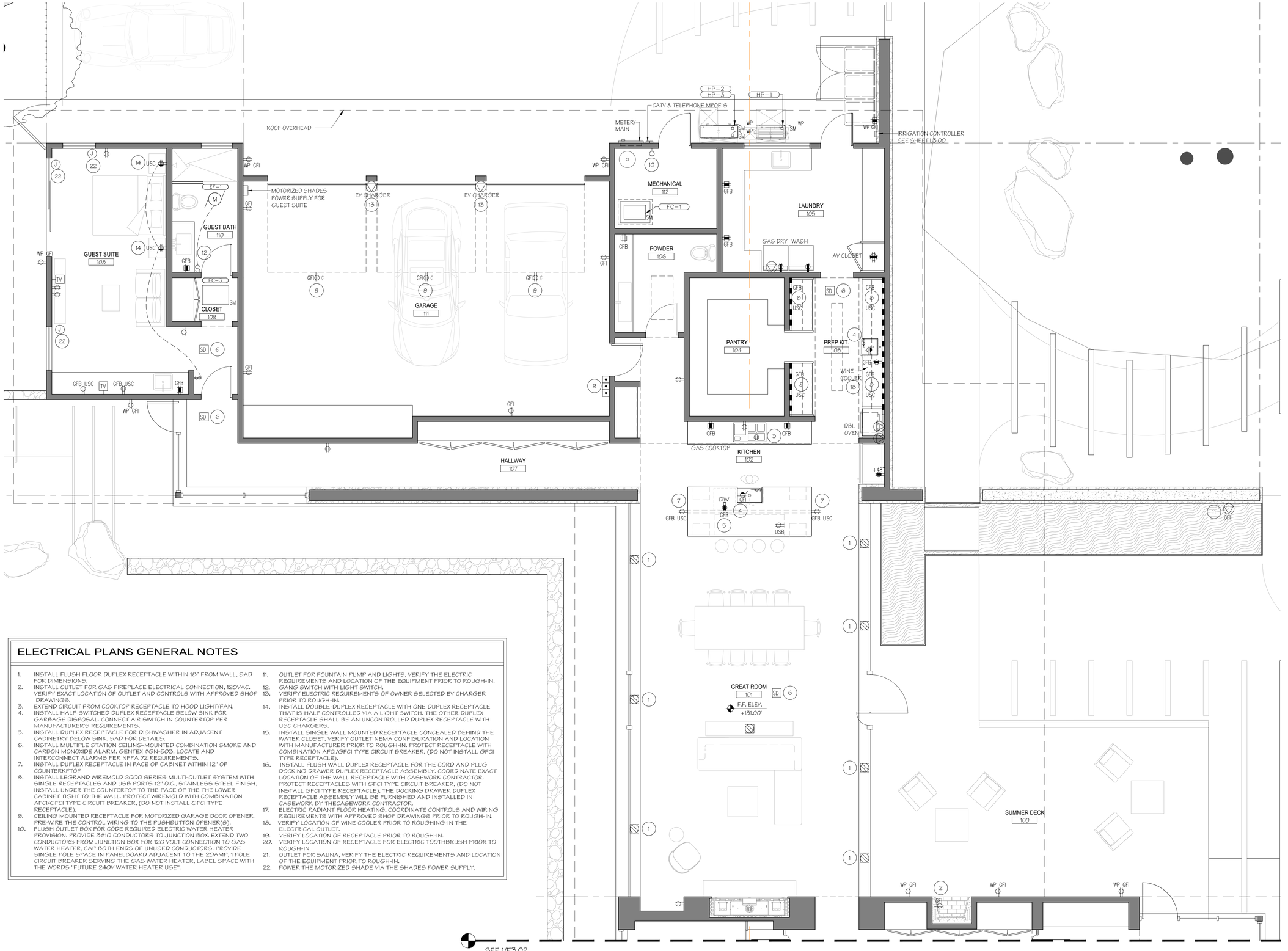

ELECTRICAL PLANS GENERAL NOTES

1. INSTALL FLUSH FLOOR DUPLEX RECEPTACLE WITHIN 18" FROM WALL. SAD FOR DIMENSIONS.
2. INSTALL OUTLET FOR GAS FIREPLACE ELECTRICAL CONNECTION, 120VAC. VERIFY EXACT LOCATION OF OUTLET AND CONTROLS WITH APPROVED SHOP DRAWINGS.
3. EXTEND CIRCUIT FROM COOKTOP RECEPTACLE TO HOOD LIGHT/FAN.
4. INSTALL HALF-SWITCHED DUPLEX RECEPTACLE BELOW SINK FOR GARBAGE DISPOSAL. CONNECT AIR SWITCH IN COUNTERTOP PER MANUFACTURER'S REQUIREMENTS.
5. INSTALL DUPLEX RECEPTACLE FOR DISHWASHER IN ADJACENT CABINETRY BELOW SINK. SAD FOR DETAILS.
6. INSTALL MULTIFLE STATION CEILING-MOUNTED COMBINATION SMOKE AND CARBON MONOXIDE ALARM, GENTEX #GN-503. LOCATE AND INTERCONNECT ALARMS PER NFPA 72 REQUIREMENTS.
7. INSTALL DUPLEX RECEPTACLE IN FACE OF CABINET WITHIN 12" OF COUNTERKTOP
8. INSTALL LEGRAND WIREMOLD 2000 SERIES MULTI-OUTLET SYSTEM WITH SINGLE RECEPTACLES AND USB PORTS 12" O.C., STAINLESS STEEL FINISH. INSTALL UNDER THE COUNTERTOP TO THE FACE OF THE THE LOWER CABINET TIGHT TO THE WALL. PROTECT WIREMOLD WITH COMBINATION AFCI/GFCI TYPE CIRCUIT BREAKER. (DO NOT INSTALL GFCI TYPE RECEPTACLE).
9. CEILING MOUNTED RECEPTACLE FOR MOTORIZED GARAGE DOOR OPENER. PRE-WIRE THE CONTROL WIRING TO THE PUSHBUTTON OPENER(S).
10. FLUSH OUTLET BOX FOR CODE REQUIRED ELECTRIC WATER HEATER PROVISION. PROVIDE 3#10 CONDUCTORS TO JUNCTION BOX. EXTEND TWO CONDUCTORS FROM JUNCTION BOX FOR 120 VOLT CONNECTION TO GAS WATER HEATER. CAP BOTH ENDS OF UNUSED CONDUCTORS. PROVIDE SINGLE POLE SPACE IN PANELBOARD ADJACENT TO THE 20AMP, 1 POLE CIRCUIT BREAKER SERVING THE GAS WATER HEATER. LABEL SPACE WITH THE WORDS "FUTURE 240V WATER HEATER USE".
11. OUTLET FOR FOUNTAIN PUMP AND LIGHTS. VERIFY THE ELECTRIC REQUIREMENTS AND LOCATION OF THE EQUIPMENT PRIOR TO ROUGH-IN.
12. GANG SWITCH WITH LIGHT SWITCH.
13. VERIFY ELECTRIC REQUIREMENTS OF OWNER SELECTED EV CHARGER PRIOR TO ROUGH-IN.
14. INSTALL DOUBLE-DUPLEX RECEPTACLE WITH ONE DUPLEX RECEPTACLE THAT IS HALF CONTROLLED VIA A LIGHT SWITCH. THE OTHER DUPLEX RECEPTACLE SHALL BE AN UNCONTROLLED DUPLEX RECEPTACLE WITH USC CHARGERS.
15. INSTALL SINGLE WALL MOUNTED RECEPTACLE CONCEALED BEHIND THE WATER CLOSET. VERIFY OUTLET NEMA CONFIGURATION AND LOCATION WITH MANUFACTURER PRIOR TO ROUGH-IN. PROTECT RECEPTACLE WITH COMBINATION AFCI/GFCI TYPE CIRCUIT BREAKER. (DO NOT INSTALL GFCI TYPE RECEPTACLE).
16. INSTALL FLUSH WALL DUPLEX RECEPTACLE FOR THE CORD AND PLUG DOCKING DRAWER DUPLEX RECEPTACLE ASSEMBLY. COORDINATE EXACT LOCATION OF THE WALL RECEPTACLE WITH CASEWORK CONTRACTOR. PROTECT RECEPTACLES WITH GFCI TYPE CIRCUIT BREAKER. (DO NOT INSTALL GFCI TYPE RECEPTACLE). THE DOCKING DRAWER DUPLEX RECEPTACLE ASSEMBLY WILL BE FURNISHED AND INSTALLED IN CASEWORK BY THECASEWORK CONTRACTOR.
17. ELECTRIC RADIANT FLOOR HEATING. COORDINATE CONTROLS AND WIRING REQUIREMENTS WITH APPROVED SHOP DRAWINGS PRIOR TO ROUGH-IN.
18. VERIFY LOCATION OF WINE COOLER PRIOR TO ROUGHING-IN THE ELECTRICAL OUTLET.
19. VERIFY LOCATION OF RECEPTACLE PRIOR TO ROUGH-IN.
20. VERIFY LOCATION OF RECEPTACLE FOR ELECTRIC TOOTHBRUSH PRIOR TO ROUGH-IN.
21. OUTLET FOR SAUNA. VERIFY THE ELECTRIC REQUIREMENTS AND LOCATION OF THE EQUIPMENT PRIOR TO ROUGH-IN.
22. POWER THE MOTORIZED SHADE VIA THE SHADES POWER SUPPLY.

SEE 1/E3.02

ELECTRIC PLAN 1
SCALE: 1/4" = 1'-0"

N TRUE NORTH

signum architecture

JUANCARLOS FERNANDEZ
PROJECT DESIGNER

SIGNUM ARCHITECTURE, LLP 707 963 8831
1675 2nd St, Napa, CA 94559

These drawings are the property of Signum Architecture and have been prepared specifically for this project. These drawings are not to be used for any other project, by any other entity or in another location.

CARMEL SERWIN RESIDENCE

24 TEHAMA
CARMEL, CA 93923
APN 169-421-045

PROJECT NUMBER	2314
DATE	01/31/2025
CHECKED BY	JCF
DRAWN BY	AVH
SCALE	AS NOTED

REVISIONS

100% SCHEMATIC DESIGN	08/07/2024
DESIGN REVIEW STEP 4	01/22/2025
BUILDING PERMIT	01/31/2025

SHEET NAME

ELECTRIC PLAN
GREAT ROOM &
GUEST WING

SHEET NUMBER

E3.01

BUILDING PERMIT

ELECTRICAL PLAN GENERAL NOTES

Electric Plans General Notes

1. BRANCH CIRCUIT SIZES - MAX 3% VOLT DROP BRANCH CIRCUIT WIRING SHALL BE SIZED BY THE CONTRACTOR TO MEET THE 2022 CA BUILDING ENERGY EFFICIENCY STANDARDS OF 3% MAXIMUM DROP, WITH THE FOLLOWING CRITERIA:
   - A. MAXIMUM DESIGN CURRENT ON 15A AND 20A BRANCH CIRCUITS (INCLUDING 75% DERATING) = 12 AMPS.
   - B. MAXIMUM DISTANCE TO CENTROID (OR WEIGHTED CENTER, DETERMINED BY APPROXIMATING THE MIDPOINT BETWEEN ALL OF THE LOADS) OF BRANCH CIRCUIT LOADS FOR EACH SIZE WIRE (COPPER):
     - i. 120V: #12 = 80FT, #10 = 125FT, #8 = 200FT, #6 = 300FT
     - ii. 208V: #12 = 135FT, #10 = 215FT, #8 = 340FT, #6 = 530FT
     - iii. 240V: #12 = 155FT, #10 = 250FT, #8 = 400FT, #6 = 600FT
     - iv. 277V: #12 = 180FT, #10 = 290FT, #8 = 450FT, #6 = 700FT
   - C. SELECT CONDUCTOR SIZES THAT WILL NOT EXCEED THE ONE-WAY CIRCUIT DISTANCES NOTED ABOVE TO THE CENTROID OF THE CIRCUIT LOADS, WITH THE CIRCUIT DISTANCE TO INCLUDE UP AND DOWN LENGTHS TO THE CEILING OR UNDERFLOOR SPACES. THE WHOLE BRANCH CIRCUIT SHALL CONSIST OF THE SAME CONDUCTOR SIZES UNLESS CONTRACTOR-PROVIDED CALCULATIONS INDICATE THE LAST DEVICE ON EACH CIRCUIT BRANCH WILL NOT EXCEED 3% VOLT DROP. FOR CONDUCTOR SIZES REQUIRED TO BE LARGER THAN #10, INSTALL INLINE HEAT-SHRUNK SPLICES IN RESPECTIVE PANELBOARD OR OUTLET BOX.
2. PER CEC 210.12 INSTALL ARC-FAULT CURRENT INTERRUPTER (AFCI) CIRCUIT BREAKERS FOR BRANCH CIRCUITS INSTALLED IN KITCHENS, FAMILY ROOMS, DINING ROOMS, LIVING ROOMS, PARLORS, LIBRARIES, DENS, BEDROOMS, SUNROOMS, RECREATION ROOMS, CLOSETS, HALLWAYS, LAUNDRY AREAS AND SIMILAR ROOMS/AREAS.
3. PER CEC 406.12, INSTALL TAMPER-RESISTANT RECEPTACLES IN KITCHENS, FAMILY ROOMS, DINING ROOMS, LIVING ROOMS, PARLOR, STUDIES, LIBRARIES, DEN, SUNROOMS, BEDROOMS, RECREATION ROOMS, PANTRIES, BREAKFAST ROOMS, BATHROOMS, OUTDOOR BALCONIES, DECKS, PORCHES, LAUNDRY AREAS, BASEMENTS, GARAGES, ACCESSORY BUILDINGS, HALLWAYS, FOYERS, AND SIMILAR ROOMS AND AREAS.
4. REFER TO THE ARCHITECTURAL ELEVATIONS FOR THE EXACT LOCATIONS AND MOUNTING HEIGHTS OF ALL RECEPTACLES.
5. REFER TO THE PLUMBING AND MECHANICAL DRAWINGS FOR THE EXACT LOCATIONS OF EQUIPMENT AND ADDITIONAL CONTROLS TO BE CIRCUITED.
6. REFER TO THE A/V DRAWINGS FOR THE LOCATIONS OF THE TELEPHONE, DATA, AND CABLE TV RECEPTACLES.
7. GANG DUPLEX RECEPTACLES SHOWN DIRECTLY ADJACENT TO EACH OTHER UNDER ONE SINGLE FACEPLATE.
8. PROVIDE DEDICATED NEUTRAL TO EACH BRANCH CIRCUIT PER CEC 210.4.
9. FOR HALF CONTROLLED DUPLEX RECEPTACLES (SWITCHED OR DIMMED) CONTROL THE LOWER RECEPTACLE. FOR HORIZONTALLY MOUNTED HALF CONTROLLED DUPLEX RECEPTACLES CONTROL THE RIGHT RECEPTACLE. PROVIDE A 3/16" GREEN DOT STICKER ADJACENT TO THE CONTROLLED RECEPTACLE.
10. PER CEC 406.11 RECEPTACLES USED FOR DIMMING SHALL MECHANICALLY REJECT ALL STANDARD NEMA STANDARD PLUGS. PROVIDE SPECIAL RECEPTACLES THAT WILL ACCEPT SPECIAL MATING REPLACEMENT PLUG FOR DIMMING USE. REFER TO ELECTRICAL SPECIFICATIONS FOR THE LUTRON MODEL NUMBERS.
11. IF NOT INDICATED ON THE ELECTRICAL DRAWINGS, REFER TO THE LIGHTING DRAWINGS FOR THE TYPE OF CONTROLLED RECEPTACLES; EITHER SWITCHED OR DIMMED.
12. PER CEC 150.0(k)2.B, EXHAUSTS FANS ARE TO BE CONTROLLED SEPARATELY FROM LIGHT FIXTURES.
13. SMOKE ALARMS INSTALLED WITHIN 20FT. OF A KITCHEN, BATHROOM, OR A ROOM THAT CONTAINS A FIREPLACE OR WOOD BURNING STOVE, SHALL BE OF THE PHOTOELECTRIC TYPE ONLY. SMOKE ALARMS SHALL RECEIVE THEIR PRIMARY POWER FROM THE BUILDING WIRING AND BE EQUIPPED WITH BATTERY BACK-UP AND BE INTERCONNECTED IN SUCH A MANNER THAT THE ACTIVATION OF ONE ALARM WILL ACTIVATE ALL OF THE ALARMS. FOR PROPER PLACEMENT OF THE COMBINATION SMOKE AND CARBON MONOXIDE ALARMS IN ROOMS WITH VARIATIONS IN CEILING HEIGHT (SLOPED, PITCHED, ETC.) REFER TO THE MANUFACTURERS GUIDELINES.
14. PROVIDE AT LEAST TWO 20 AMP SMALL APPLIANCE BRANCH CIRCUITS TO SERVE ALL THE WALL AND FLOOR RECEPTACLES IN KITCHENS, PANTRIES, BREAKFAST ROOMS, DINING ROOMS, OR SIMILAR AREAS. (CEC ART. 210.11(C)(1)). PROVIDE AT LEAST ONE 20 AMP BRANCH CIRCUIT TO SUPPLY THE LAUNDRY RECEPTACLES AND SUCH CIRCUIT SHALL SHALL HAVE NO OTHER RECEPTACLES. (CEC ART. 210.11(C)(2)). PROVIDE AT LEAST ONE 20 AMP BRANCH CIRCUIT TO SUPPLY THE BATHROOM RECEPTACLES AND SUCH CIRCUIT SHALL SHALL HAVE NO OTHER RECEPTACLES. (CEC ART. 21011(C)(3))
15. FOR ALL DISCONNECT SWITCHES, AMPERE RATING OF DISCONNECT SHALL BE GREATER OR EQUAL TO THAT OF THE RESPECTIVE LOAD'S UPSTREAM FEEDER BREAKER.

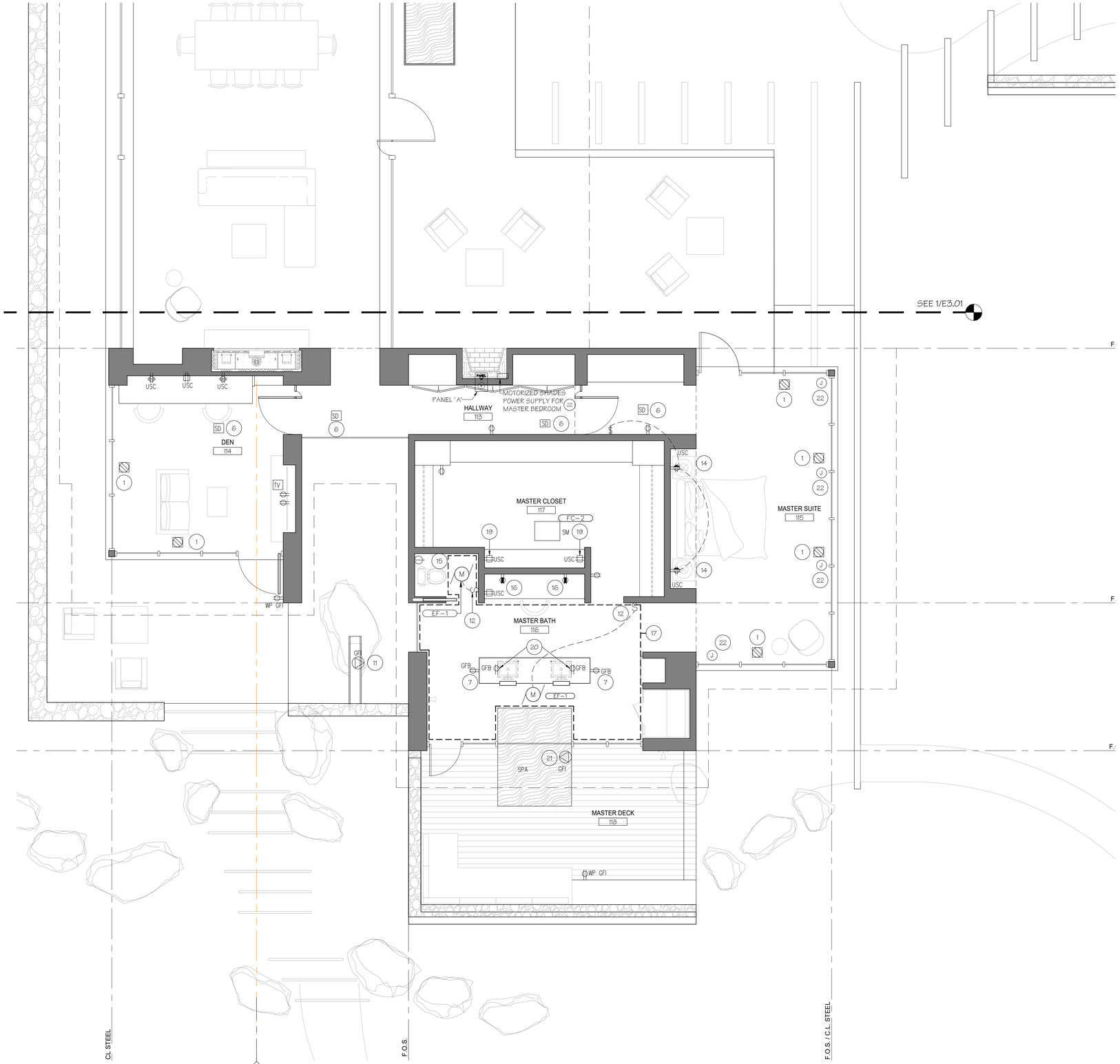

ELECTRIC PLAN
SCALE: 1/4" = 1'-0"

1

N
TRUE NORTH

signum architecture

JUANCARLOS FERNANDEZ
PROJECT DESIGNER

SIGNUM ARCHITECTURE, LLP 707 963 8831
1675 2nd St, Napa, CA 94559

These drawings are the property of Signum Architecture and have been prepared specifically for this project. These drawings are not to be used for any other project, by any other entity or in another location.

CARMEL
SERWIN RESIDENCE

24 TEHAMA
CARMEL, CA 93923
APN 169-421-045

PROJECT NUMBER	2314
DATE	01/31/2025
CHECKED BY	JCF
DRAWN BY	AVH
SCALE	AS NOTED

REVISIONS

100% SCHEMATIC DESIGN	*08/07/2024*
DESIGN REVIEW STEP 4	*01/22/2025*
BUILDING PERMIT	*01/31/2025*

SHEET NAME

ELECTRIC PLAN
MASTER WING

SHEET NUMBER

E3.02

BUILDING PERMIT

(XX) GROUNDING AND BONDING KEY NOTES

(G1) GROUNDING ELECTRODE CONDUCTOR TO NEAREST EFFECTIVELY GROUNDED METAL COLD WATER PIPING SYSTEM AND/OR OTHER METAL PIPING SYSTEMS NOTED, FULLY-SIZED PER TABLE 250.66. CONNECT WITHIN 5 FEET OF THE PIPING ENTRANCE INTO THE BUILDING. (THIS SHALL NOT BE THE ONLY ELECTRODE.) CEC 250.52, 250.53(D) AND 250.66.

(G2) GROUNDING ELECTRODE CONDUCTOR TO NEAREST EFFECTIVELY-GROUNDED BUILDING STEEL STRUCTURE, FULLY-SIZED PER TABLE 250.66.

(G3) GROUNDING ELECTRODE CONDUCTOR TO CONCRETE ENCASED ELECTRODE GROUND, SIZED PER TABLE 250.66, MINIMUM #4 CU. CEC 250.66(B)

(G4) GROUNDING ELECTRODE CONDUCTOR TO GROUND ROD (IN EQUIPMENT OR ADJACENT GROUND WELL BOX), SIZED PER TABLE 250.66, MAXIMUM #6 CU. CEC 250.66(A)

BONDING JUMPER TO METAL COLD WATER PIPING SYSTEM, FULLY-SIZED PER TABLE 250.66. CONNECT WITHIN 5 FEET OF THE PIPING ENTRANCE INTO THE BUILDING. THIS IS NOT REQUIRED WHERE THE GROUNDING ELECTRODE CONDUCTOR IN SHEET NOTE #G4 IS INSTALLED TO THE SAME PIPE. CEC 250.104(A)(1)

(G5) BONDING JUMPER TO ABOVE-GROUND GAS AND/OR OTHER PIPING SYSTEM NOTED, #6 CU. CONNECT WITHIN 5 FEET OF THE PIPING ENTRANCE INTO THE BUILDING. THIS IS NOT REQUIRED WHERE THE GROUNDING ELECTRODE CONDUCTOR IN SHEET NOTE #G4 IS INSTALLED TO THE SAME PIPE. CEC 250.104(B)

(G6) #6 CU EQUIPMENT BONDING CONDUCTOR TO GROUND BUS AT TELEPHONE TERMINAL BOARD OR OTHER EQUIPMENT AS NOTED.

(G7) GROUNDING ELECTRODE CONDUCTOR SIZES – CEC TABLE 250.66

	PROVIDE G.E.C. SIZE AS NOTED	COPPER SERVICE CONDUCTOR SIZES	ALUMINUM SERVICE CONDUCTOR SIZES
(G8)	#8 CU	#2 OR SMALLER	1/0 OR SMALLER
(G9)	#6 CU	#1 OR 1/0	2/0 OR 3/0
(G10)	#4 CU	2/0 OR 3/0	4/0 OR 250KCMIL
(G11)	#2 CU	4/0 THROUGH 350KCMIL	OVER 250 THROUGH 500KCMIL
(G12)	1/0 CU	400KCMIL THROUGH 600KCMIL	OVER 500 THROUGH 900KCMIL
(G13)	2/0 CU	700KCMIL THROUGH 1100KCMIL	OVER 900 THROUGH 1750
(G14)	3/0 CU	OVER 1100KCMIL	OVER 1750

GROUNDING AND BONDING NOTES

1. GROUND RODS SHALL BE VERTICALLY DRIVEN AT A 6'-0" MINIMUM SPACING FROM OTHER RODS AND OTHER GROUNDING ELECTRODES (I.E., WATER PIPING AND STRUCTURAL STEEL). RODS MAY BE DIAGONALLY DRIVEN OR INSTALLED HORIZONTALLY AND BURIED 30" BELOW GRADE WHEN THE SOIL PREVENTS RODS FROM BEING VERTICALLY DRIVEN. CEC 250.53(G)
2. CONCRETE ENCASED ELECTRODE GROUND TO BE A CONCRETE-ENCASED (MIN 2") BARE COPPER CONDUCTOR, SIZED PER TABLE 250.66, MINIMUM #4, 20 FOOT LENGTH, LOCATED NEAR THE BOTTOM OF THE CONCRETE FOUNDATION, FOOTING OR PAD, AND BELOW ANY VAPOR BARRIERS. CEC 250.52(3)
3. CONNECTIONS TO GROUNDING ELECTRODES SHALL BE MADE WITH LISTED CONNECTORS, FITTINGS OR EXOTHERMIC WELDING. CEC 250.70
4. DO NOT INSTALL GROUNDING ELECTRODE CONDUCTORS TO UNDERGROUND GAS PIPING SYSTEMS. CEC 250.52(7)(B)
5. INSTALL BONDING JUMPERS ACROSS INSULATED OR REMOVABLE JOINTS OF BONDED METALLIC PIPING SYSTEMS. CEC 250.68(B)
6. ALL GROUNDING AND BONDING CONNECTIONS SHALL BE ACCESSIBLE FOR TESTING. CEC 250.68(A)
7. ALL GROUNDING ELECTRODE CONDUCTORS AND BONDING JUMPERS SHALL BE INSTALLED IN RIGID METALLIC CONDUIT WHERE EXPOSED IN OUTDOOR AREAS, OR IN EMT CONDUIT WHERE INSTALLED EXPOSED IN INDOOR AREAS OR CONCEALED IN FRAMED BUILDING STRUCTURE, OR IN PVC CONDUIT WHERE INSTALLED IN-SLAB OR IN UNDERGROUND LOCATIONS. ALL CONDUCTORS AND JUMPERS SHALL BE SUITABLY PROTECTED FROM DAMAGE AND SHALL BE BONDED TO THEIR ENCLOSING METALLIC RACEWAY. CEC 250.64
8. SEE SECTION 26 0500, BASIC ELECTRICAL MATERIALS AND METHODS, FOR ADDITIONAL GROUNDING AND BONDING REQUIREMENTS.

GENERAL NOTES

1. PER NEC 110.24 AND 110.21 PROVIDE LABELS ON ELECTRICAL SERVICE EQUIPMENT INDICATING MAXIMUM AVAILABLE FAULT CURRENT AND DATE OF FAULT CURRENT CALCULATION. REFER TO LABELING DETAILS, THIS SHEET.
2. PER NEC 110.16 AND 110.21 PROVIDE LABELS AND MARKINGS ON ELECTRICAL DISTRIBUTION EQUIPMENT (I.E. METER/MAIN, PANELBOARDS) INDICATING POTENTIAL ARC FLASH HAZARDS. REFER TO LABELING DETAILS, THIS SHEET.

(#) KEY NOTES

1. SURGE PROTECTION DEVICE.
2. CUSTOMER METER WITH KWH AND KW DEMAND METER RECORDINGS.
3. PROVIDE OVERCURRENT PROTECTION DEVICE AT OPPOSITE END OF BUSS BAR FROM INCOMING LUGS FOR FUTURE PV CONNECTION. PROVIDE LABEL READING AS SHOWN ON THIS SHEET.
4. PROVIDE REVERSE FEED RATED CIRCUIT BREAKER.
5. MICROGRID EQUIPMENT (PV AND BATTERY) PROVIDED BY MICROGRID CONTRACTOR.
6. PANELBOARD WITH 200 AMP BUS, 240/120V, 1PH, 3W, MAIN LUGS ONLY, 10KAIC, NEMA 1, FLUSH MOUNTED. WITH AFCI, GFCI, AND COMBINATION AFCI/GFCI TYPE BRANCH CIRCUIT BREAKERS AS REQUIRED TO SERVE THE RESPECTIVE LOADS.
7. MOUNT INTERSYSTEM BONDING TERMINATION EXTERNAL TO SERVICE ENTRANCE EQUIPMENT PER CEC 250.94, ERICO MODEL #IBTB OR EQUIVALENT.
8. LOAD CENTER WITH 60 AMP BUS, 240/120V, 1PH, 3W, 30A/2P MAIN CIRCUIT BREAKER, 10KAIC, NEMA 1 , SURFACE MOUNTED. WITH AFCI, GFCI, AND COMBINATION AFCI/GFCI TYPE BRANCH CIRCUIT BREAKERS AS REQUIRED TO SERVE THE RESPECTIVE LOADS.

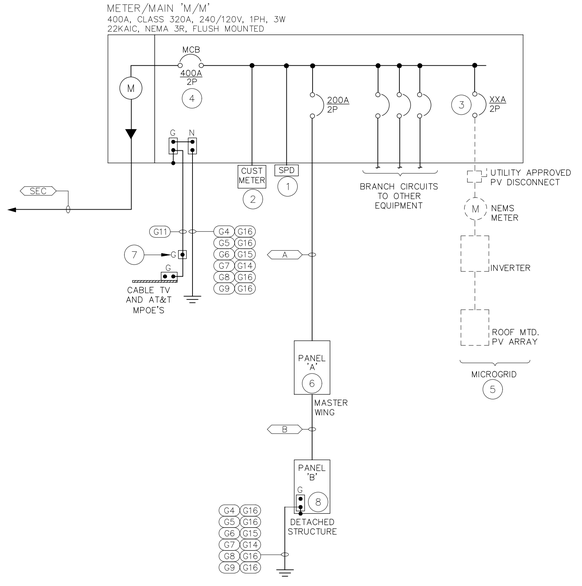

SINGLE LINE DIAGRAM

N.T.S. 1

LABELING DETAILS

WARNING:
INVERTER OUTPUT CONNECTION
DO NOT RELOCATE THIS
OVERCURRENT DEVICE

INVERTER CONNECTION LABEL

INSTALL PERMANENT LABEL AT MAIN SWITCHBOARD:

SERVICE AVAILABLE FAULT CURRENT

(2022 CEC 110.24)

SERVICE VOLTAGE AND AMPERAGE:
240/120V 1PH 3W VOLTS 400 AMPS
AVAILABLE CURRENT ON UTILITY PRIMARY:
ASSUMED INFINITE BUS
ASSUMED MAXIMUM UTILITY TRANSFORMER SIZE:
100 kVA 1.80 % Z
ASSUMED MAXIMUM UTILITY SECONDARY CONDUCTORS:
750 AL PER PHASE 200 FEET
ASSUMED MAXIMUM MOTOR CONTRIBUTION:
320 AMPS
CALCULATED MAXIMUM FAULT CURRENT AVAILABLE:
9,630 AMPS (MAX 1PH L-L OR L-N)
DATE OF CALCULATION:
Jan 10, 2025
THIS CALCULATION MUST BE
REVIEWED IF THE SERVICE IS ALTERED

FAULT CURRENT LABEL

ELECTRICAL FEEDER SCHEDULE

FEEDER TAG	FEEDER CONDUIT AND WIRING	FED FROM	FED TO	NOTES/COMMENTS	ESTIM. LENGTH (FT)	DESIGN LOAD (AMPS)	FEEDER AMPACITY (AMPS)	OCPD SIZE (AMPS)	FEEDER VOLTAGE	VOLTAGE DROP %	CONDUIT FILL %
SEC	3" CO	SITE	METER/MAIN		TBD	-	-	-	240	-	0%
CATV	2" CO	SITE	CATV MPOE		TBD	-	-	-	240	-	0%
TELE	2" CO	SITE	TELE MPOE		TBD	-	-	-	-	-	0%
A	2"C - 3#3/0, 1#6 GRD	METER/MAIN	PANEL 'A'		120	150	200	200	240	1.0%	26%
B	1"C - 3#8, 1#8 GRD	PANEL 'A'	PANEL 'B'		125	23	50	30	240	1.6%	18%

ELECTRICAL FEEDER AND BRANCH CIRCUIT SCHEDULE NOTES (DESCRIPTION OF COLUMNS)

1 FEEDER/BRANCH CIRCUIT TAG: REFER TO THE SINGLE-LINE DIAGRAM FOR FEEDER/BRANCH CIRCUIT TAGS
2 FEEDER/BRANCH CIRCUIT CONDUIT AND WIRING: PROVIDE CONDUIT AND WIRING AS SPECIFIED CORRESPONDING TO THE TAG ("AL" = ALUMINUM XHHW 90C)
3 FED FROM: FEEDER/BRANCH CIRCUIT IS FED FROM EQUIPMENT OR LOCATION AS NOTED
4 FED TO: FEEDER/BRANCH CIRCUIT FEEDS THE EQUIPMENT OR LOCATION AS NOTED; CORRESPONDS TO TAG NAME
5 NOTES/COMMENTS: NOTES OR COMMENTS SPECIFIC TO THE SPECIFIED FEEDER/BRANCH CIRCUIT
6 ESTIM. LENGTH (FT): ESTIMATED LENGTH OF FEEDER/BRANCH CIRCUIT IN FEET
7 DESIGN LOAD (AMPS): MAXIMUM DESIGN FEEDER/BRANCH CIRCUIT CURRENT
8 MAXIMUM FEEDER AMPACITY: MAXIMUM DESIGN FEEDER/BRANCH CIRCUIT AMPACITY (AMPS) AFTER TEMPERATURE AND CONDUCTOR QUANTITY DERATIONS
9 OCPD (AMPS): OVER-CURRENT PROTECTION DEVICE AMPACITY
10 FEEDER/BRANCH CIRCUIT VOLTAGE: LINE VOLTAGE OF FEEDER/BRANCH CIRCUIT, UON
11 VOLTAGE DROP % : ESTIMATED MAXIMUM PERCENT VOLTAGE DROP BASED ON DESIGN LOAD; BASED ON METALLIC CONDUIT (WORST CASE)
12 CONDUIT FILL % : ESTIMATED MAXIMUM PERCENT CONDUIT FILL

NOTE: THE ESTIMATED LENGTHS IN THE SCHEDULE ABOVE ARE FOR CALCULATION PURPOSES. THESE LENGTHS SHOULD NOT BE USED AS A BASIS FOR BIDDING; CONTRACTOR SHALL VERIFY FEEDER/BRANCH CIRCUIT LENGTHS ON DRAWINGS AND IN FIELD.

NOTE: ALL FEEDERS AND GROUNDS SHALL BE COPPER THHN/THWN UNLESS NOTED AS "AL" IN SCHEDULE.

Building: SERWIN RESIDENCE Date: 11/8/2024

ELECTRIC SERVICE ESTIMATE

Optional Calculation for Dwelling Unit
Per CEC Article 220.82

AREA SUMMARY

Living Areas	3,674 sqft	
Garage & Storage	751 sqft	
Total:	4,425 sqft	

GENERAL LOADS					Normal Loads (VA)
3,674 sqft	at	3	VA/sqft	(Lighting and Receipt.)	11,022
Small Appliance ckts - 2/Kitchen		2	at	1,500 VA ea.	3,000
Laundry branch circuits		1	at	1,500 VA ea.	1,500
Total General Light & Small Appliance Loads:					15,522

APPLIANCE & WATER HEATER LOADS				
Refrigerator/Freezer	1	at	900 VA ea.	900
Under Counter Refrigerator	1	at	250 VA ea.	250
Undercounter Wine Cooler	1	at	300 VA ea.	300
Dishwasher	1	at	1,300 VA ea.	1300
Microwave	2	at	1,500 VA ea.	3000
Hood	1	at	1,200 VA ea.	1200
Gas Range	1	at	500 VA ea.	500
Electric Insta-Hot Water Heaters	3	at	1,500 VA ea.	4500
Gas Dryer	1	at	850 VA ea.	850
Washing Machine	1	at	960 VA ea.	960
Electric Toilet	1	at	1,250 VA ea.	1250
Total Appliance Loads:				15,010

GENERAL LOADS DEMAND CALCULATION	
Total General Loads	30,532
First 10,000VA at 100%	10,000
Remainder at 40%	8,213
Total Demand General Loads:	18,213

MISC LOADS				
Infrared Sauna	1	at	8,000 VA ea.	8,000
Electric Hot Tub	1	at	8,800 VA ea.	8,800
Outdoor Gas Radiant Heaters	1	at	240 VA ea.	240
AV Racks	2	at	1,800 VA ea.	3,600
Electric Vehicle Chargers (48Amp)	1	at	11,500 VA ea.	11,500
Total Misc Loads at 100% Demand:				32,140

HEATING & AIR CONDITIONING LOADS				
Heat Pump HP-1	1	at	4,278.0 VA ea.	4,278
Heat Pump HP-2	1	at	5,200.0 VA ea.	5,200
Heat Pump HP-3	1	at	2,288.0 VA ea.	2,288
Electric Radiant Floor Mat	100	at	12 VA/sqft	1,200
Fan Coil FC-1	1	at	1,035 VA ea.	1,035
Fan Coil FC-2	1	at	541 VA ea.	541
Fan Coil FC-3	1	at	370 VA ea.	370
Larger Heating & Air Conditioning Loads at 100% Demand:				14,912

TOTAL CONNECTED LOAD: 78 kVA
TOTAL CONNECTED LOAD – AMPERES AT 240/120V, 1PH, 3W: 323 AMPS

TOTAL DEMAND LOAD: 65 kVA
TOTAL CONNECTED LOAD – AMPERES AT 240/120V, 1PH, 3W: 272 AMPS

1/10/25 8:35 PM

CALCULATIONS

N/A 1

signum architecture

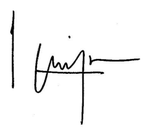

JUANCARLOS FERNANDEZ
PROJECT DESIGNER

SIGNUM ARCHITECTURE, LLP 707 963 8831
1675 2nd St, Napa, CA 94559

These drawings are the property of Signum Architecture and have been prepared specifically for this project. These drawings are not to be used for any other project, by any other entity or in another location.

CARMEL
SERWIN RESIDENCE

24 TEHAMA
CARMEL, CA 93923
APN 169-421-045

PROJECT NUMBER	2314
DATE	01/31/2025
CHECKED BY	JCF
DRAWN BY	AVH
SCALE	AS NOTED

REVISIONS

100% SCHEMATIC DESIGN	08/07/2024
DESIGN REVIEW STEP 4	01/22/2025
BUILDING PERMIT	01/31/2025

SHEET NAME

SINGLE LINE DIAGRAM

SHEET NUMBER

E5.01

BUILDING PERMIT

GENERAL NOTES

1) CONTRACTOR TO EXAMINE THE PROPOSED WORK SITE AND BECOME FAMILIAR WITH ALL JOB CONDITIONS AFFECTING THE WORK SHOWN. CONTRACTOR(S) SHALL FIELD-VERIFY SITE CONDITIONS INCLUDING LOCATIONS AND SIZES OF EXISTING PIPING, VALVES, CLEANOUTS, WASTE MAINS, GAS METERS, ETC., AND BIDS SHALL BE BASED ON ACTUAL FIELD CONDITIONS. NO ADDITIONAL ALLOWANCE WILL BE GRANTED DUE TO LACK OF KNOWLEDGE OF SITE CONDITIONS. ACCEPT SOLE AND COMPLETE RESPONSIBILITY FOR CONDITIONS OF THE JOBSITE, INCLUDING SAFETY OF ALL PERSONS AND PROPERTY DURING PERFORMANCE OF THE WORK.

2) DRAWINGS INDICATE DIAGRAMMATICALLY THE ARRANGEMENT OF PRINCIPAL APPARATUS, PIPING, DUCTWORK, AND OTHER MATERIAL. FOLLOW DRAWING AS CLOSELY AS POSSIBLE IN ORDER TO ACHIEVE A NEAT INSTALLATION WHILE STILL WORKING AROUND ANY OBSTRUCTIONS. INSPECT SITE CONDITIONS AFFECTING THE WORK AND PROVIDE FITTINGS AND ACCESSORIES AS REQUIRED TO MEET CONDITIONS WHETHER SHOWN OR NOT.

3) IT IS NOT THE INTENTION OF THE PLANS AND SPECIFICATIONS TO COVER ALL INCIDENTALS REQUIRED TO PROVIDE COMPLETE AND FULLY-OPERATIONAL SYSTEMS. THE CONTRACTOR IS TO FURNISH ALL LABOR, MATERIALS, TRANSPORTATION, EQUIPMENT, MISCELLANEOUS SERVICES, ETC., REQUIRED TO ACCOMPLISH THIS RESULT. ANYTHING WHICH MAY BE REASONABLY CONSTRUED AS A NECESSARY PART OF THE INSTALLATION SHALL BE INCLUDED, WHETHER SPECIFICALLY SHOWN OR MENTIONED OR NOT. ENGINEER WILL PROVIDE INTERPRETATIONS UPON REQUEST.

4) ALL WORK AND MATERIALS SHALL BE PERFORMED AND INSTALLED IN COMPLIANCE WITH THE FOLLOWING CODES AS AMENDED AND ADOPTED BY THE AUTHORITY(IES) HAVING JURISDICTION: 2022 CALIFORNIA BUILDING CODE, 2022 CALIFORNIA MECHANICAL CODE, 2022 CALIFORNIA PLUMBING CODE, 2022 CALIFORNIA ELECTRICAL CODE, 2022 CALIFORNIA ENERGY CODE (TITLE 24), NATIONAL FIRE PROTECTION ASSOCIATION (NFPA), OCCUPATIONAL SAFETY AND HEALTH ACT (OSHA), AND ANY OTHER LOCAL CODES, ORDINANCES, REGULATIONS, OR AUTHORITIES HAVING JURISDICTION. NOTHING IN THESE PLANS IS TO BE CONSTRUED TO PERMIT WORK NOT CONFORMING TO THESE CODES OR OTHER CODES AND REGULATIONS APPLICABLE TO THIS PROJECT. THESE CODES SHALL DETERMINE MINIMUM REQUIREMENTS FOR MATERIALS, METHODS, AND LABOR PRACTICES NOT OTHERWISE DEFINED IN THESE SPECIFICATIONS.

5) DEFINITIONS:
   a. WORK: LABOR AND MATERIALS OF THE CONTRACTOR AND/OR SUBCONTRACTOR.
   b. FURNISH: OBTAIN, COORDINATE, SUBMIT THE NECESSARY DRAWINGS, DELIVER TO THE JOBSITE IN NEW CONDITION AND GUARANTEE.
   c. PROVIDE: FURNISH AND INSTALL.
   d. CONNECT: BRING SERVICE TO THE EQUIPMENT AND MAKE FINAL ATTACHMENTS INCLUDING NECESSARY PIPE FITTINGS, DUCTWORK, TRANSITIONS, ETC.
   e. CONCEALED: HIDDEN FROM SIGHT IN CHASES, FURRED SPACES, SHAFTS, ABOVE CEILING, EMBEDDED IN CONSTRUCTION, IN CRAWL SPACES, OR BURIED.
   f. EXPOSED: NOT INSTALLED UNDERGROUND OR CONCEALED AS DEFINED ABOVE.
   g. PERFORMANCE: CONTRACTOR SHALL PERFORM ALL WORK SPECIFIED, INDICATED, AND REQUIRED UNLESS OTHERWISE NOTED, INCLUDING FINAL CONNECTIONS, IN A WORKMANLIKE MANNER USING WORKERS SKILLED AND EXPERIENCED IN THE TRADE. PIPES, FIXTURES, EQUIPMENT, GRILLES, REGISTERS, ETC. TO BE INSTALLED LEVEL, SQUARE, OR CENTERED, ETC. TO GIVE A NEAT APPEARANCE.
   h. FULL FUNCTION: PROVIDE ALL MINOR ITEMS NECESSARY FOR A COMPLETE AND FULLY FUNCTIONAL INSTALLATION.

6) CONTRACTOR SHALL CONFIRM ALL SITE VOLTAGES BEFORE BIDDING AND ORDERING EQUIPMENT. REIMBURSE ELECTRICAL CONTRACTOR, AT NO CHARGE TO CLIENT, FOR ELECTRICAL CONTRACTOR'S COST INCURRED DUE TO SUBSTITUTION OF MECHANICAL EQUIPMENT HAVING ELECTRICAL REQUIREMENTS DIFFERING FROM SITE CONDITIONS.

7) CONTRACTOR SHALL PROVIDE THE OWNER WITH COPIES OF OPERATION, MAINTENANCE, AND PREVENTATIVE MAINTENANCE MANUALS FOR EACH MODEL AND TYPE OF PLUMBING AND MECHANICAL EQUIPMENT.

8) CONTRACTOR SHALL PROVIDE EVIDENCE OF LICENSING, BONDING, AND INSURANCE, AND PROVIDE OTHER NECESSARY ADMINISTRATIVE FUNCTIONS FOR CONTRACTOR'S WORK.

9) CONTRACTOR SHALL PROCURE AND PAY FOR ALL REQUIRED PERMITS AND SERVICE CHARGES.

10) COORDINATION: CONFORM TO GENERAL CONSTRUCTION CONTRACT DOCUMENTS EXCEPT AS MODIFIED HEREIN. REFER ALSO TO STRUCTURAL AND ELECTRICAL CONTRACT DOCUMENTS. COORDINATE ALL WORK WITH OTHER TRADES.

11) CUTTING AND PATCHING: CUT AND PATCH AS REQUIRED. CUT OR WELD STRUCTURAL MEMBERS ONLY WITH APPROVAL OF A STRUCTURAL ENGINEER. PATCHING SUBJECT TO ACCEPTANCE BY OWNER.

12) SAW CUT TRENCHES IN SLAB SHALL BE FULLY RESTORED AND REINFORCED TO PREVENT SAGGING. ROUGHEN SAW CUT EDGES PRIOR TO RE-POURING CONCRETE.

13) COORDINATE ALL WORK WITH OTHER TRADES TO PROVIDE A COMPLETE INSTALLATION. CONNECT ALL EQUIPMENT FURNISHED BY OTHERS AS REQUIRED. INSTALL ALL WORK TO CLEAR ARCHITECTURAL AND STRUCTURAL MEMBERS. INSTALL ALL ABOVE GRADE (OVERHEAD) PIPING AS HIGH AS PRACTICAL.

14) RESTORE ALL DAMAGE RESULTING FROM YOUR WORK AND LEAVE PREMISES IN CLEAN CONDITION WHEN FINISHED WITH WORK. ADJUST, CLEAN, REPAIR, OR REPLACE PRODUCTS, WHICH HAVE BEEN DAMAGED.

15) GUARANTEE ALL WORK AND MATERIALS FOR ONE YEAR MINIMUM FROM DATE OF FILING NOTICE OF COMPLETION.

16) PROVIDE FLASHING AND COUNTER FLASHING FOR ALL WALL AND ROOF PENETRATIONS.

17) ADJUSTMENTS: MAKE MINOR ADJUSTMENTS TO WORK WHERE REQUESTED BY OWNER, WHEN SUCH ADJUSTMENTS ARE NECESSARY TO PROPER OPERATION AND WITHIN THE INTENT OF THE CONTRACT.

18) MATERIALS AND EQUIPMENT: PROVIDE NEW, UL-LISTED, COMMERCIAL-GRADE MATERIALS, DEVICES, EQUIPMENT, AND FIXTURES SUITABLE FOR THE ENVIRONMENT WHERE INSTALLED. REUSE EXISTING ONLY WHEN COMPLIANT WITH THE CONTRACT DOCUMENTS, IN GOOD CONDITION, AND APPROVED BY THE ENGINEER.

19) INSTALLATION: INSTALL ALL MATERIALS, EQUIPMENT, AND SYSTEMS IN FULL ACCORD WITH MANUFACTURER'S INSTRUCTIONS.

20) LAYOUT: INSTALL ALL PIPING AND DUCTWORK TO PRESENT A NEAT AND ORDERLY APPEARANCE. RUN ALL LINES PARALLEL WITH BUILDING CONSTRUCTION AS MUCH AS POSSIBLE. MAINTAIN HEADROOM, EQUIPMENT CLEARANCE, AND GRADIENT WHERE REQUIRED. ALLOW FOR EXPANSION & CONTRACTION.

21) ACCESS DOORS: PROVIDE ACCESS DOORS OR PANELS FOR ALL VALVES, CLEANOUTS, DAMPERS, CONTROLS, DEVICES, AND OTHER ITEMS REQUIRING INSPECTION OR MAINTENANCE.

22) START-UP: THOROUGHLY TEST AND DEMONSTRATE PROPER OPERATION OF ALL SYSTEMS AND EQUIPMENT MODIFIED, FURNISHED OR INSTALLED UNDER THIS CONTRACT.

23) WARRANTY: ALL MATERIALS AND EQUIPMENT INSTALLED UNDER THIS CONTRACT SHALL BE GUARANTEED FREE FROM ALL MECHANICAL, ELECTRICAL, AND WORKMANSHIP DEFECTS FOR A MINIMUM OF ONE YEAR FROM DATE OF FINAL ACCEPTANCE. CONTRACTOR SHALL BE RESPONSIBLE FOR ALL DAMAGES TO THE PREMISES CAUSED BY LEAKS AND/OR BREAKS IN PIPES AND FIXTURES INSTALLED UNDER THIS CONTRACT, AS WELL AS ANY DAMAGE FROM LEAKS VIA ROOF PENETRATIONS MADE AND SEALED UNDER CONTRACTOR'S SCOPE.

24) PATCHING & PAINTING: RESTORE ANY DAMAGE RESULTING FROM THE WORK AND LEAVE PREMISES CLEAN. ADJUST, CLEAN, REPAIR, AND/OR REPLACE ANY ITEMS DAMAGED BY THE WORK. RESTORE WALL AND ROOF PENETRATIONS TO MATCH SURROUNDING WALL OR ROOF, RESPECTIVELY.

25) AIR BALANCE: PROVIDE SERVICES NECESSARY TO VERIFY AIR QUANTITIES AND BALANCE FOR ESTABLISHED QUANTITIES AND UNIFORM TEMPERATURE IN THE SPACES SERVED. ADJUST ALL DAMPERS AND ELEMENTS IN GRILLES AND DIFFUSERS FOR PROPER AIR DISTRIBUTION AND TO MINIMIZE DRAFTS. COMPLY WITH SMACNA MANUAL FOR THE BALANCING AND ADJUSTMENT OF AIR DISTRIBUTION SYSTEMS.

26) DUCTWORK SHALL BE FABRICATED AND INSTALLED IN ACCORDANCE WITH THE LATEST EDITION OF THE SMACNA LOW PRESSURE DUCT CONSTRUCTION STANDARD.

27) ALL BRANCH DUCTS SHALL HAVE BALANCING DAMPERS WITH ACCESSIBLE LOCKING TYPE QUADRANT.

28) HVAC EQUIPMENT SHALL BE CERTIFIED BY THE MANUFACTURER FOR COMPLIANCE WITH CALIFORNIA ENERGY COMMISSION STANDARDS.

29) DUCT SHALL MEET UL 181, CLASS I AND NFPA 90A AND 90B. DUCT SHALL BE INSTALLED STRAIGHT AND SUPPORT SPACING SHALL BE IN STRICT ACCORDANCE WITH "SMACNA HVAC DUCT CONSTRUCTION STANDARDS, METAL AND FLEXIBLE". FLEXIBLE DUCTWORK SHALL BE EXTENDED TO THE FULLEST POSSIBLE LENGTH, IN ORDER TO MINIMIZE PRESSURE DROP IN THE DUCT. EXCESS DUCT LENGTHS SHALL BE SHORTENED TO PREVENT UNNECESSARY CHANGES IN DIRECTIONS. WHERE ABRUPT CHANGES IN DIRECTION ARE UNAVOIDABLE USE ADJUSTABLE SHORT RADIUS SHEET METAL ELBOWS TO MAKE DIRECTION CHANGES. CONNECTIONS AT METAL DUCTS OR COLLARS SHALL BE MADE BY DRAW BANDS AND PRESSURE-SENSITIVE TAPE WITH THE DRAW BANDS TIGHTENED AS RECOMMENDED BY THE MANUFACTURER WITH AND ADJUSTABLE TENSIONING TOOL. USING PRESSURE-SENSITIVE TAPE ALONE WITHOUT DRAW BANDS IS NOT ACCEPTABLE. ALL PRESSURE-SENSITIVE TAPES AND MASTICS USED SHALL COMPLY WITH UL 181.

30) HVAC EQUIPMENT SHALL NOT BE OPERATED DURING CONSTRUCTION WITHOUT A FILTER INSTALLED TO PROTECT THE EVAPORATOR COIL. AFTER ALL CONSTRUCTION IS COMPLETED, ALL CONSTRUCTION FILTERS SHALL BE REMOVED AND NEW FILTERS SHALL BE INSTALLED.

RESIDENTIAL CALGREEN MECHANICAL NOTES

1) ENHANCED DURABILITY AND REDUCED MAINTENANCE:
   4.406.1 ANNULAR SPACES AROUND PIPES, ELECTRIC CABLES, CONDUITS OR OTHER OPENINGS IN PLATES AT EXTERIOR WALLS SHALL BE PROTECTED AGAINST THE PASSAGE OF RODENTS BY CLOSING SUCH OPENINGS WITH CEMENT MORTAR, CONCRETE MASONRY OR SIMILAR METHOD ACCEPTABLE TO THE ENFORCING AGENCY

2) BUILDING MAINTENANCE AND OPERATION:
   4.410.1 AN OPERATION AND MAINTENANCE MANUAL SHALL BE PROVIDED TO THE BUILDING OCCUPANT OR OWNER

3) ENVIRONMENTAL QUALITY:
   A) 4.503.1 ANY INSTALLED GAS FIREPLACE SHALL BE A DIRECT-VENT SEALED-COMBUSTION TYPE. ANY INSTALLED WOODSTOVE OR PELLET SOTVE SHALL COMPLY WITH U.S. EPA NEW SOURCE PERFORMANCE STANDARDS (NSPS) EMISSION LIMITS AS APPLICABLE, AND SHALL HAVE A PERMANENT LABEL INDICATING THEY ARE CERTIFIED TO MEET THE EMISSION LIMITS. WOODSTOVES, PELLET STOVES, AND FIREPLACES SHALL ALSO COMPLY WITH APPLICABLE LOCAL ORDINANCES.
   B) 4.504.1 DUCT OPENINGS AND OTHER RELATED AIR DISTRIBUTION COMPONENT OPENINGS SHALL BE COVERED DURING CONSTRUCTION
   C) 4.504.2.1 ADHESIVES, SEALANTS AND CAULKS SHALL BE COMPLIANT WITH VOC AND OTHER TOXIC COMPOUND LIMITS

4) INSTALLER AND SPECIAL INSPECTOR QUALIFICATIONS:
   A) 702.1 HVAC SYSTEM INSTALLERS ARE TRAINED AND CERTIFIED IN THE PROPER INSTALLATION OF HVAC SYSTEMS
   B) 702.2 SPECIAL INSPECTORS EMPLOYED BY THE ENFORCING AGENCY MUST BE QUALIFIED AND ABLE TO DEMONSTRATE COMPETENCE IN THE DISCIPLINE THEY ARE INSPECTING
   C) VERIFICATION OF COMPLIANCE WITH THIS CODE MAY INCLUDE CONSTRUCTION DOCUMENTS, PLANS, SPECIFICATIONS BUILDER OR INSTALLER CERTIFICATION, INSPECTION REPORTS, OR OTHER METHODS ACCEPTABLE TO THE ENFORCING AGENCY WHICH SHOW SUBSTANTIAL CONFORMANCE

SPLIT HEAT PUMP CONDENSER SCHEDULE - OUTDOOR UNIT

TAG	MANU.	MODEL	LOCATION	SERVES	TONS	REF.	SUCTION TEMP.	COOLING					HEATING		CONDENSER		COMPRESSOR		ELECTRICAL			SEER2	HSPF2	WEIGHT (LBS.)	REMARKS
								TOTAL MBH	SENSIBLE MBH	EDB	EWB	AMB	MBH	EDB	QTY.	FLA (EA.)	QTY.	RLA (EA.)	VOLTAGE	MCA	MOCP				
HP-1	GOODMAN	GSZH503010A	EXTERIOR	FC-1	2.5	R-410A	45°F	30.0	24.0	80°F	67°F	105°F	30.0	60°F	1	0.97	1	14.1	230-1ø-60Hz	18.6	30.0	15.2	7.8	215	OR APPROVED EQUIVALENT, MOUNT ON CONCRETE OR FIBER REINFORCED PAD

SPLIT HEAT PUMP FAN COIL SCHEDULE - INDOOR UNIT

TAG	MANU.	MODEL	LOCATION	SERVES	TONS	CFM	BLOWER FAN HP	ELECTRICAL				WEIGHT (LBS.)	REMARKS
								VOLTAGE	FLA	MCA	MOCP		
FC-1	GOODMAN	AMST30BU1400AA	MECH ROOM	MAIN INTERIOR	2.5	1000	0.75	230-1ø-60Hz	4.5	5.6	15	129	OR APPROVED EQUIVALENT

MINI-SPLIT HEAT PUMP CONDENSER SCHEDULE - OUTDOOR UNIT

TAG	MANU.	MODEL	LOCATION	SERVES	TONS	REF.	SUCTION TEMP.	COOLING					HEATING				CONDENSER		COMPRESSOR		ELECTRICAL			SEER2 (EER2)	HSPF2	WEIGHT (LBS.)	REMARKS
								TOTAL MBH	SENSIBLE MBH	EDB	EWB	AMB	MBH	EDB	MBH	EDB	QTY.	FLA (EA.)	QTY.	RLA (EA.)	VOLTAGE	MCA	MOCP				
HP-2	MITSUBISHI	PUZ-A36NKA7	EXTERIOR	FC-1	3.0	R-410A	45°F	36.0	36.0	80°F	67°F	95°F	38.0	47°F	20.4	17°F	2	0.5	1	8.0	208-1ø-60Hz	25.0	31.0	18.7 (12.1)	8.6	214	OR EQUIVALENT, MOUNTED ON EQUIPMENT PAD
HP-3	MITSUBISHI	PUZ-A12NKA7	EXTERIOR	FC-3	1.0	R-410A	45°F	12.0	12.0	80°F	67°F	95°F	14.0	47°F	8.7	17°F	1	0.5	1	7.0	208-1ø-60Hz	11.0	28.0	20.7 (12.5)	9.4	93	

SPLIT HEAT PUMP FAN COIL SCHEDULE - INDOOR UNIT

TAG	MANU.	MODEL	LOCATION	SERVES	TONS	CFM	BLOWER FAN HP	ELECTRICAL				WEIGHT (LBS.)	REMARKS
								VOLTAGE	FLA	MCA	MOCP		
FC-2	MITSUBISHI	PEAD-A36AA8	IN CEILING	MASTER SUITE	3.0	1200	-	208-1ø-60Hz	2.60	3.25	-	84	OR EQUIVALENT, MOUNTED IN-ATTIC ON EQUIPMENT PLATFORM AS REQUIRED
FC-3	MITSUBISHI	PEAD-A12AA8	IN CEILING	GUEST SUITE	1.0	400	-	208-1ø-60Hz	1.78	2.23	-	58	

EXHAUST FAN SCHEDULE

TAG	MANU.	MODEL	MOUNTING TYPE	SERVES	CFM	E.S.P.	RPM	ELECTRICAL					SONES	WEIGHT (LBS.)	REMARKS
								V-ø-Hz	WATTS	AMPS	BHP	HP			
EF-1	PANASONIC	FV-0511VF1	CEILING	BATH ROOMS & LAUNDRY	50	0.1"	795	115-1-60	4.0	0.08	-	-	<0.3	9.5	OR EQUIVALENT

SUPPLY REGISTER SIZING SCHEDULE

CFM RATING	SIZE
<65	8x4
65-130	10x6
130-200	12x8
200-250	14x8

MECHANICAL LEGEND

(1) AC-1	THERMOSTAT
	CONDENSATE POC
	ELECTRICAL POC
	GAS POC
	WATER POC
	CEILING DIFFUSER (HARDLID)
	CEILING RETURN (HARDLID)
	SIDEWALL SUPPLY/RETURN
	POC - POINT OF CONNECTION
	TRANSITION
	DAMPER
	50 CFM (4"ø) AND 100 CFM (6"ø) CEILING EXHAUST FANS
ø	DIAMETER
CFM	CUBIC FEET PER MINUTE
FA,TB	FROM ABOVE, TO BELOW
FB,TA	FROM BELOW, TO ABOVE
RA	RETURN AIR
SA	SUPPLY AIR

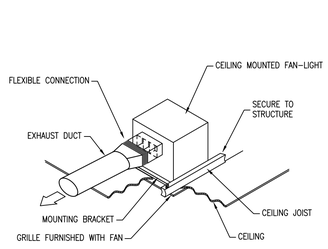

EXHAUST FAN 1 M0

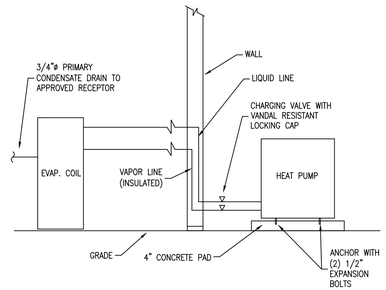

SPLIT HEAT PUMP 2 M0

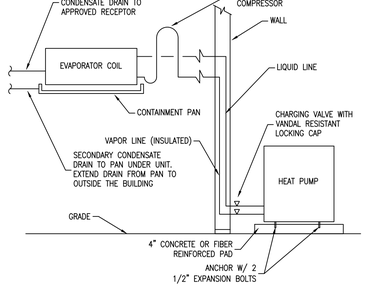

SPLIT HEAT PUMP 3 M0

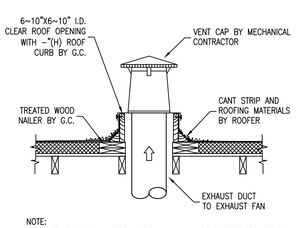

NOTE:
EXHAUST VENTS SHALL TERMINATE A MINIMUM OF 3 FEET FROM THE PROPERTY LINE, A MINIMUM OF 3 FEET FROM BUILDING OPENINGS, AND A MINIMUM OF 10 FEET FROM OUTSIDE AIR INTAKES.

EXHAUST VENT 4 M0

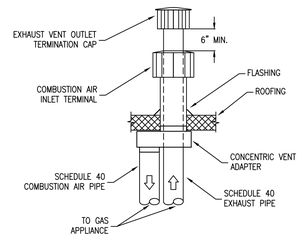

NOTES:
1. CONTRACTOR SHALL MAINTAIN CLEARANCES AROUND FLUE PIPE TO PREVENT HEAT MIGRATION AS TO NOT DAMAGE INSULATION.
2. CONTRACTOR SHALL PROVIDE HIGH TEMPERATURE INSULATION WHERE NECESSARY OR REQUIRED.

CONCENTRIC VENT - ROOFTOP 5 M0

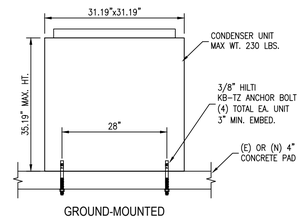

GROUND-MOUNTED

CONDENSER UNIT TIE-DOWN 6 M0

DATE	DESCRIPTION	REVISION

JOB NO. 24302 | DRAWN EEM | CHECKED | ORIGINAL DATE 01-30-2025

REGISTERED PROFESSIONAL ENGINEER
STEVEN P. WISNIEWSKI
No.M32225
EXP.12-31-2026
MECHANICAL
STATE OF CALIFORNIA

ISSUED FOR	DATE
PERMIT	01-30-2025

OPTIMIZED ENERGY & FACILITIES CONSULTING, INC.
5734 Lonetree Boulevard, Rocklin, CA 95765
Office: (916) 626 5516 www.oefcinc.com

SERWIN RESIDENCE
24 TEMAHA
CARMEL, CA. 93923

SHEET TITLE
MECHANICAL GENERAL NOTES, SCHEDULES, & DETAILS

SHEET NO.
M0

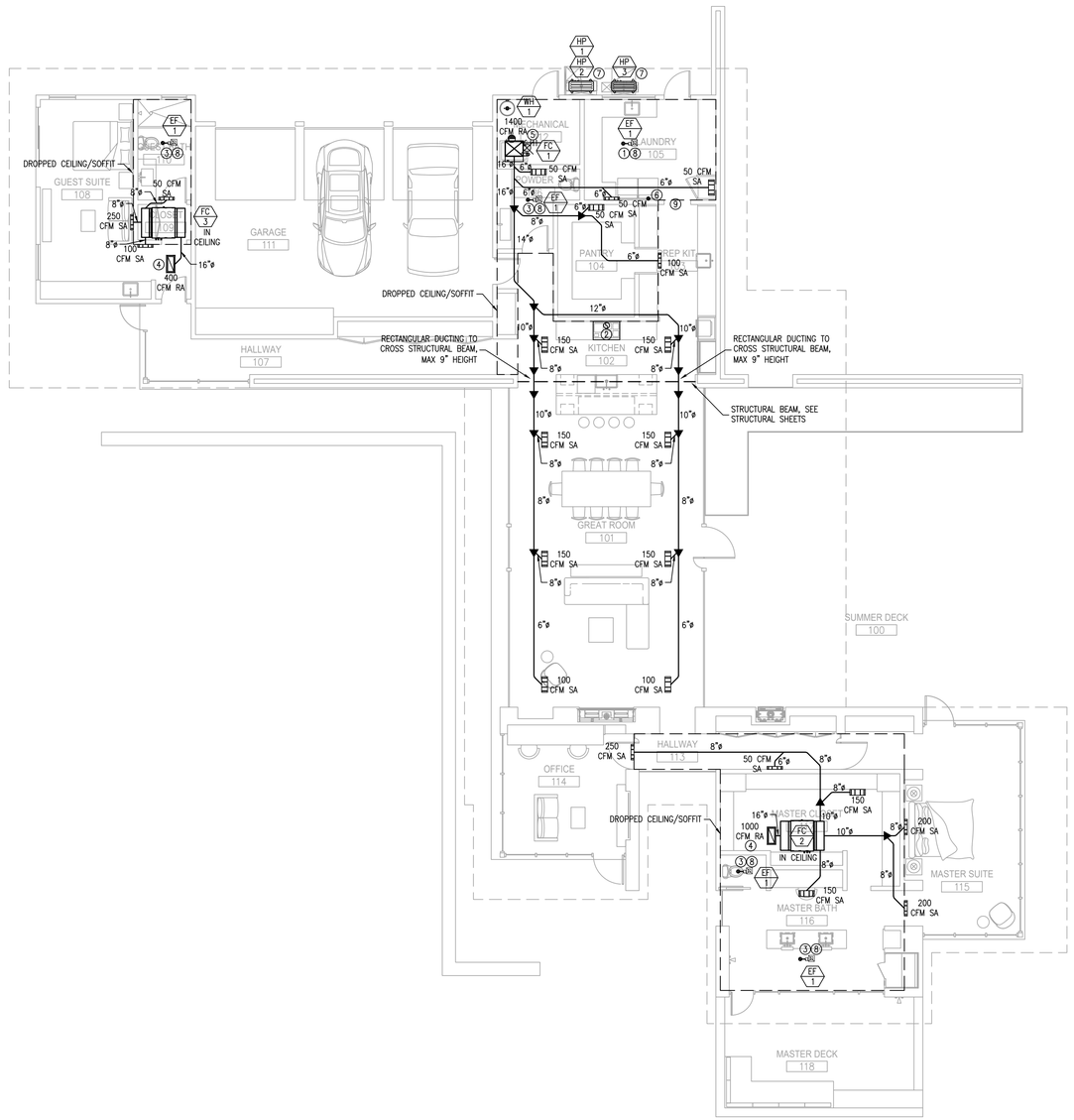

A MECHANICAL PLAN
SCALE: 1/8"=1'-0"

NORTH

SHEET NOTES:

1. (E) EXISTING
   (N) NEW
2. ALL EQUIPMENT, DUCTWORK, FITTINGS, FIXTURES, AND PIPING ARE (N) U.O.N.
3. ALL CONCEALED DUCTWORK TO BE INSULATED WITH MINIMUM R-8, AND PERMITTED TO BE FLEX DUCT
4. ALL HVAC FILTER RACKS OR GRILLES ARE TO USE GASKETS, SEALING, OR OTHER MEANS TO CLOSE GAPS AROUND INSERTED FILTERS
5. THERMOSTATS TO BE INSTALLED AT 46" A.F.F. (TOP OF THERMOSTAT). DO NOT INSTALL THERMOSTATS OVER CASEWORK OR SHELVING OVER 24" IN DEPTH AND 34" IN HEIGHT
6. ALL DUCTWORK PENETRATIONS TO THE EXTERIOR OF BUILDING SHALL BE CORROSION-RESISTANT AND PROTECTED FROM INTRUSION BY WATER, INSECTS, ETC.
7. PROVIDE FIRE STOPPING ASSEMBLY PROTECTION FOR DUCT PENETRATIONS OF RATED ASSEMBLIES. FIRE STOP RATING SHALL MATCH RATED ASSEMBLY BEING PENETRATED
8. COORDINATE FINAL GRILLE LOCATIONS WITH OWNER
9. CONTRACTOR TO ENSURE ALL EQUIPMENT IS INSTALLED WITH MAINTENANCE CLEARANCES PER MANUFACTURERS' RECOMMENDATIONS

KEY NOTES:

1. EXHAUST FAN TO RUN CONTINUOUSLY AT 50 CFM PER TITLE 24 AND ASHRAE 62.2 REQUIREMENTS FOR WHOLE HOUSE VENTILATION, PROVIDE WITH SIGN NEXT TO FAN SWITCH INFORMING OWNER FAN IS TO RUN CONTINUOUSLY. MAX 1.0 SONE
2. KITCHEN HOOD TO PROVIDE MINIMUM 110 CFM OF EXHAUST AIR PER TABLE 150.0-G, AND MAX 3.0 SONES PER TITLE 24. HOOD TO BE INSTALLED PER REQUIRED CODE AND MANUFACTURER'S RECOMMENDATIONS
3. BATHROOM EXHAUST FAN TO PROVIDE MINIMUM OF 50 CFM OF EXHAUST AIR PER TITLE 24. MAX 1.0 SONE
4. RETURN AIR GRILLE WITH FILTER FRAME
5. RETURN AIR GRILLE WITH FILTER MOUNTED DIRECTLY ON RA PLENUM
6. 4"ø DRYER VENT TO ROOF, VENT PER MANUFACTURER INSTRUCTIONS PER CMC 504.4.2.1. VERIFY VENT LENGTH DOES NOT EXCEED 14', PROVIDE ACCESSIBLE BOOSTER FAN AS REQUIRED
7. NEW HVAC CONDENSING UNIT, FINALIZE LOCATION OF CONDENSER(S) WITH OWNER. CONDENSING UNITS TO BE PLACED ON FIBER REINFORCED OR CONCRETE PAD. CONTRACTOR TO PROVIDE MAINTENANCE OUTLET WITHIN 25' OF CONDENSING UNIT.
8. 4"ø EXHAUST VENT TO ROOF
9. ENSURE INSTALLATION OF (1) 16"X14" LOUVER IN DOOR TO PROVIDE DRYER MAKEUP AIR PER CMC 504.4.1

REVISION	DESCRIPTION	DATE

JOB NO. 24302 | DRAWN EEM | CHECKED | ORIGINAL DATE 01-30-2025

REGISTERED PROFESSIONAL ENGINEER
STEVEN P. WISNIEWSKI
No.M32225
EXP.12-31-2026
MECHANICAL
STATE OF CALIFORNIA

ISSUED FOR: PERMIT | DATE: 01-30-2025

OPTIMIZED ENERGY & FACILITIES CONSULTING, INC.
5734 Lonetree Boulevard, Rocklin, CA 95765
Office: (916) 626 5516 www.oefcinc.com

SERWIN RESIDENCE
24 TEMAHA
CARMEL, CA. 93923

SHEET TITLE: MECHANICAL PLAN

SHEET NO. M1

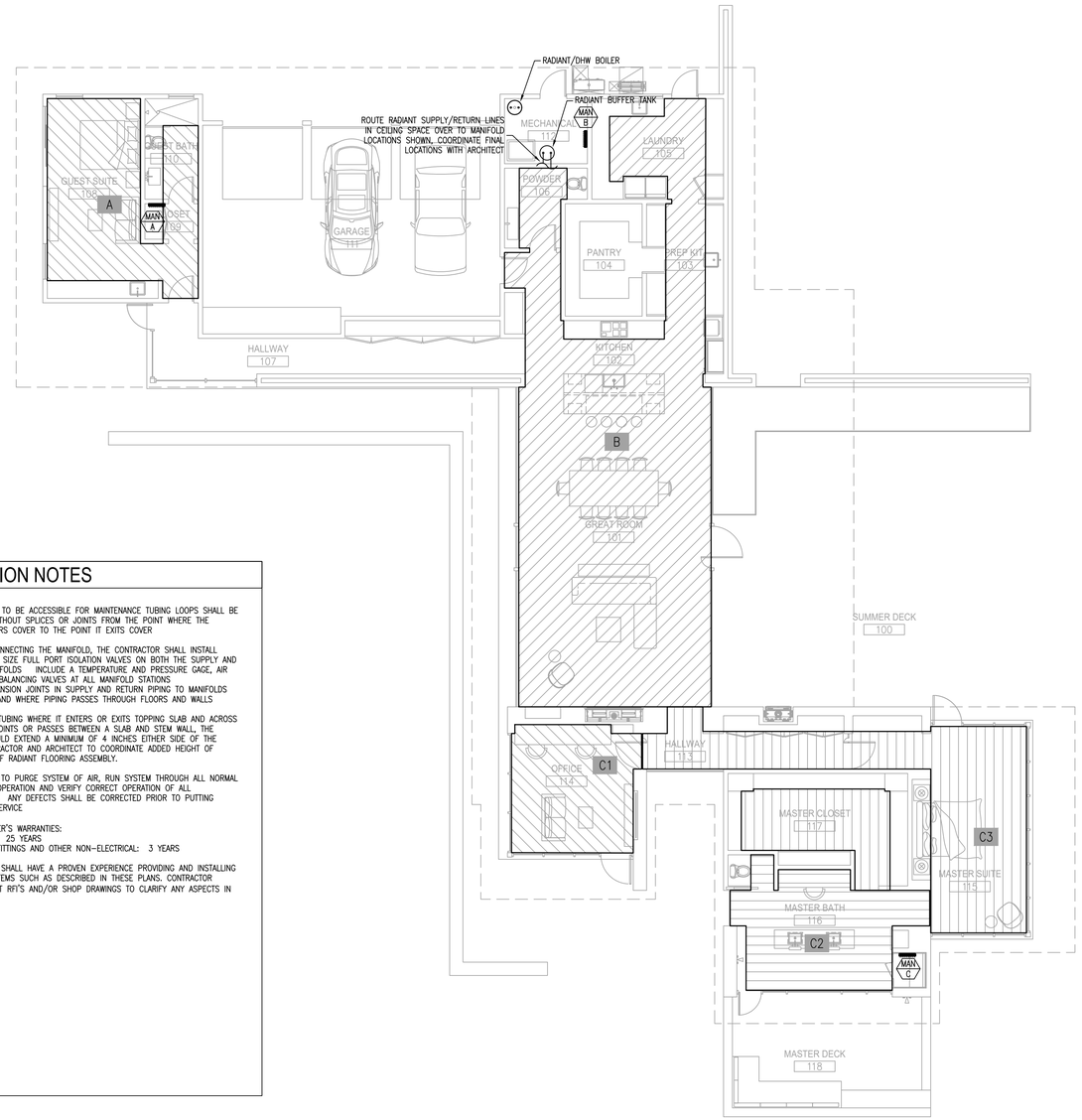

RADIANT ZONE AREAS:

ZONE:	SQUARE FEET (SF)
A	303 SF
B	1150 SF
C1	200 SF
C2	372 SF
C3	400 SF

RADIANT FLOOR INSTALLATION NOTES

1. RADIANT TUBING SHALL BE SDR-9 CROSS-LINKED POLYETHYLENE (PEX) WITH OXYGEN BARRIER AND SHALL HAVE A MAXIMUM WORKING PRESSURE/TEMPERATURE RATING OF 160 PSI @ 73.4 F, 100 PSI @ 180 F, 80 PSI @ 200 F PEX-AL-PEX MAY BE SELECTED BY THE INSTALLING CONTRACTOR, PROVIDE SUBMITTAL TO MECHANICAL DESIGNER FOR REVIEW AND APPROVAL
2. TUBING SHALL BE MANUFACTURED IN PLANT WITH AN ISO 9002 QUALITY CONTROL CERTIFICATION THE TUBING SHALL MEET ASTM F-876, F-877, F-2023 AND CSA B137.5
3. ALL COMPONENTS OF THE TUBING SYSTEM SHALL BE PROVIDED BY A SINGLE SUPPLIER, INCLUDING TUBING, MANIFOLDS, FITTINGS, AND OTHER ACCESSORY ITEMS FOR A COMPLETE INSTALLATION
4. SUPPLY AND RETURN PIPING TO MANIFOLDS SHALL BE CROSS-LINKED POLYETHYLENE INSULATION AND SUPPORT FOR ALL SUPPLY AND RETURN PIPING SHALL MEET MINIMUM STANDARDS APPROPRIATE FOR THE MATERIAL USED AND THE LOCAL CODE
5. RADIANT FLOOR TUBING SHALL BE 1/2" PEX PLACED AT 9" O.C. TUBING SHALL NOT VARY MORE THAN 10% FROM THE SPACING ON THE PLANS
6. RADIANT FLOOR MAXIMUM SURFACE TEMPERATURE IS 85 DEGREES F IN AREAS WHERE PROLONGED FOOT CONTACT IS EXPECTED RADIANT FLOOR MAXIMUM SURFACE TEMPERATURE IS 90 DEGREES IN AREAS WHERE PROLONGED FOOT CONTACT IS NOT EXPECTED
7. HYDRONIC RADIANT TUBING SHALL BE INSTALLED IN ACCORDANCE WITH THE MANUFACTURER'S LATEST RECOMMENDATIONS
8. TUBING SHALL NOT BE INSTALLED CLOSER THAN 4" FROM ANY WALL PLATES, BRACKETS, WATER CLOSETS, BASE CABINETS OR OTHER FIXTURES WHICH MAY BE ANCHORED TO THE FLOOR WITH METAL FASTENERS OR DRIVEN BY CONCRETE NAILS WHERE TUBING DOES CROSS UNDERNEATH WALLS SUFFICIENT MARKING AND DOCUMENTATION MUST BE USED IN ORDER NOT TO DAMAGE TUBING FROM BOTTOM PLATE ANCHORS
9. PRESSURE/TEMPERATURE (PETE'S PLUGS) SHALL BE INSTALLED ON THE INLET AND OUTLET SIDES OF THE RADIANT UNIT AND ON THE OUTLET SIDE OF ALL CIRCULATION PUMPS
10. MANIFOLDS TO BE SECURELY MOUNTED IN TWO PLACES AND LEVELED, USING STANDARD PLUMBING HARDWARE INSTALL MANIFOLDS AT LEAST 16" ABOVE FINISHED FLOOR
11. ALL ENDS OF PIPE SHALL BE REAMED ALL PIPING SHALL BE RUN AS DIRECT AS POSSIBLE
12. ALL FITTINGS TO BE ACCESSIBLE FOR MAINTENANCE TUBING LOOPS SHALL BE INSTALLED WITHOUT SPLICES OR JOINTS FROM THE POINT WHERE THE TUBING ENTERS COVER TO THE POINT IT EXITS COVER
13. PRIOR TO CONNECTING THE MANIFOLD, THE CONTRACTOR SHALL INSTALL APPROPRIATE SIZE FULL PORT ISOLATION VALVES ON BOTH THE SUPPLY AND RETURN MANIFOLDS INCLUDE A TEMPERATURE AND PRESSURE GAGE, AIR VENTS, AND BALANCING VALVES AT ALL MANIFOLD STATIONS
14. INSTALL EXPANSION JOINTS IN SUPPLY AND RETURN PIPING TO MANIFOLDS AS NEEDED AND WHERE PIPING PASSES THROUGH FLOORS AND WALLS
15. SLEEVE ALL TUBING WHERE IT ENTERS OR EXITS TOPPING SLAB AND ACROSS EXPANSION JOINTS OR PASSES BETWEEN A SLAB AND STEM WALL, THE SLEEVE SHOULD EXTEND A MINIMUM OF 4 INCHES EITHER SIDE OF THE JOINT. CONTRACTOR AND ARCHITECT TO COORDINATE ADDED HEIGHT OF THICKNESS OF RADIANT FLOORING ASSEMBLY.
16. CONTRACTOR TO PURGE SYSTEM OF AIR, RUN SYSTEM THROUGH ALL NORMAL PHASES OF OPERATION AND VERIFY CORRECT OPERATION OF ALL COMPONENTS ANY DEFECTS SHALL BE CORRECTED PRIOR TO PUTTING SYSTEM IN SERVICE
17. MANUFACTURER'S WARRANTIES:
    PEX TUBING: 25 YEARS
    MANIFOLDS, FITTINGS AND OTHER NON-ELECTRICAL: 3 YEARS
17. CONTRACTOR SHALL HAVE A PROVEN EXPERIENCE PROVIDING AND INSTALLING RADIANT SYSTEMS SUCH AS DESCRIBED IN THESE PLANS. CONTRACTOR SHALL SUBMIT RFI'S AND/OR SHOP DRAWINGS TO CLARIFY ANY ASPECTS IN QUESTION.

A RADIANT ZONING PLAN
SCALE: 1/8"=1'-0"

NORTH

REVISION	DESCRIPTION	DATE

JOB NO: 24302
DRAWN: EEM
CHECKED:
ORIGINAL DATE: 01-30-2025

REGISTERED PROFESSIONAL ENGINEER
STEVEN P. WISNIEWSKI
No.M32225
EXP.12-31-2026
MECHANICAL
STATE OF CALIFORNIA

ISSUED FOR: PERMIT
DATE: 01-30-2025

OPTIMIZED ENERGY & FACILITIES CONSULTING, INC.
5734 Lonetree Boulevard, Rocklin, CA 95765
Office: (916) 626 5516 www.oefcinc.com

SERWIN RESIDENCE
24 TEMAHA
CARMEL, CA. 93923

SHEET TITLE: RADIANT ZONING PLAN

SHEET NO.: M2

RESIDENTIAL CALGREEN PLUMBING NOTES

1) ENHANCED DURABILITY AND REDUCED MAINTENANCE:
   4.406.1 ANNULAR SPACES AROUND PIPES, ELECTRIC CABLES, CONDUITS OR OTHER OPENINGS IN PLATES AT EXTERIOR WALLS SHALL BE PROTECTED AGAINST THE PASSAGE OF RODENTS BY CLOSING SUCH OPENINGS WITH CEMENT MORTAR, CONCRETE MASONRY OR SIMILAR METHOD ACCEPTABLE TO THE ENFORCING AGENCY

2) BUILDING MAINTENANCE AND OPERATION:
   4.410.1 AN OPERATION AND MAINTENANCE MANUAL SHALL BE PROVIDED TO THE BUILDING OCCUPANT OR OWNER

3) INDOOR WATER USE
   A) PLUMBING FIXTURES (WATER CLOSETS AND URINALS) AND FITTINGS (FAUCETS AND SHOWERHEADS) INSTALLED IN RESIDENTIAL BUILDINGS SHALL COMPLY WITH THE PRESCRIPTIVE REQUIREMENTS OF SECTIONS 4.303.1.1 THROUGH 4.303.1.4.4

   B) PLUMBING FIXTURES AND FITTINGS REQUIRED IN SECTION 4.303.1 SHALL BE INSTALLED IN ACCORDANCE WITH THE CALIFORNIA PLUMBING CODE, AND SHALL MEET THE APPLICABLE REFERENCED STANDARDS.

PIPING SCHEDULE

TYPE	SIZE	JOINING METHOD	NOTES
SANITARY WASTE BELOW GRADE	ALL	SOLVENT	ABS
SANITARY WASTE ABOVE GRADE	ALL	SOLVENT	ABS
SANITARY VENT	ALL	SOLVENT	ABS
CONDENSATE PIPING	ALL	SOLVENT	PVC/CPVC
CONDENSATE PIPING EXPOSED	ALL	SOLVENT	PVC/CPVC (PROTECTED WITH WATER-BASED LATEX PAINT)
GAS PIPING BELOW GRADE	ALL	COMPRESSION	POLYETHYLENE
GAS PIPING ABOVE GRADE	ALL	THREADED	GALVANIZED STEEL
DOMESTIC WATER	ALL	95/5 SOLDER	TYPE "L" OR "K" COPPER W/SEISMIC BRACING

PLUMBING FIXTURE CONNECTION SCHEDULE

FIXTURE TAG	FIXTURE TYPE	TRAP SIZE	WASTE SIZE	VENT SIZE	CW SIZE	HW SIZE
BT-1	BATH TUB/SHOWER	2"	2"	1-1/2"	1/2"	1/2"
CW-1	CLOTHES WASHER	2"	2"	1-1/2"	1/2"	1/2"
DW-1	DISHWASHER	1-1/2"	2"	1-1/2"	–	1/2"
SK-1	KITCHEN SINK	1-1/2"	2"	1-1/2"	1/2"	1/2"
SK-2	BAR SINK	1-1/2"	2"	1-1/2"	1/2"	1/2"
LS-1	LAUNDRY SINK	1-1/2"	2"	1-1/2"	1/2"	1/2"
HB-1	HOSE BIBB	–	–	–	1/2"	–
LAV-1	LAVATORY	1-1/4"	1-1/2"	1-1/4"	1/2"	1/2"
SH-1	SHOWER	2"	2"	1-1/2"	1/2"	1/2"
WC-1	WATER CLOSET – GRAVITY	INTEGRAL	3"	2"	1/2"	–
FD-1	FLOOR DRAIN	1-1/2"	2"	1-1/2"	–	–

PIPE INSULATION SCHEDULE

TYPE	DIAMETER SIZE (INCHES)	FLUID TEMP RANGE (°F)	INSULATION CONDUCTIVITY (BTU*INCH/HR*FT²*°F)	INSULATION THICKNESS (INCHES)
DOMESTIC HOT WATER	<1	105–140	0.22–0.28	1
DOMESTIC HOT WATER	1 OR LARGER	105–140	0.22–0.28	1-1/2

GAS TANK WATER HEATER SCHEDULE

SYMBOL	MANU.	MODEL	LOCATION	RECOVERY AT 60°F ΔT	NAT. GAS INPUT (MBH)	EFF	CAPACITY (GAL)	VOLTAGE	REMARKS
WH-1	AO SMITH	BTR-199	MECHANICAL ROOM	307	199	–	81	115-1ø-60Hz	INSTALL TMV-1 TO ENSURE 120°F SETPOINT, TO SERVE BOTH DHW AND RADIANT

CIRCULATION PUMP SCHEDULE

SYMBOL	MANU.	MODEL	SERVES	ELECTRICAL			WEIGHT (LBS)	REMARKS
				HP	VOLTAGE	AMPS		
CP-1	BELL & GOSSETT	LR-15B	WH-1	1/12	115-1ø-60Hz	1.1	13.1	CONTROLLED BY TIMER, TO OPERATE INTERMITTENTLY DURING 'WAKING' HOURS.

RADIANT HEATING EQUIPMENT

TAG	FIXTURE	MANU.	MODEL NO.	REMARKS
BT-1	RADIANT HOT WATER BUFFER TANK	–	–	–

WATER AND SEWER SERVICE CALCULATION

FIXTURE TYPE	NO.	SEWER		COLD WATER		HOT WATER		TOTAL WATER
		FU	TOTAL	FU	TOTAL	FU	TOTAL	FU
BAR SINK	2	2	4	2	4	1.5	3	4
CLOTHES WASHER	1	3	3	4	4	3	3	4
DISHWASHER	1	2	2	0	0	1.5	1.5	1.5
HOSE BIBB (FIRST)	1	0	0	2.5	2.5	0	0	2.5
HOSE BIBB (ADDITIONAL)	3	0	0	1	3	0	0	3
KITCHEN SINK (DOMESTIC)	1	2	2	1.5	1.5	1.125	1.125	1.5
LAUNDRY SINK	1	2	2	1.5	1.5	1.125	1.125	1.5
LAVATORY	4	1	4	1	4	0.75	3	4
FLOOR DRAIN	1	2	2	0	0	0	0	0
SHOWER	3	2	6	2	6	1.5	4.5	6
WATER CLOSET - GRAVITY	3	4	12	2.5	7.5	0	0	7.5
MISC EQUIP (ICE, SODA, COFFEE)	1	1	1	0.5	0.5	0	0	0.5
TOTAL FU			38.0		34.5		17.3	36.0

EQUIVALENT COLD WATER FLOW RATE (GPM):	23		
PRESSURE AVAILABLE AT MAIN (PSI):	50		
MINIMUM REQUIRED FIXTURE PRESSURE (PSI):	8		
ELEVATION LOSS (PSI):	1.3	# OF FLOORS:	1
METER LOSS (PSI):	3.7	SIZE (INCHES):	1
BACKFLOW PREVENTER LOSS (PSI):	10		
EQUIVALENT PIPE LENGTH FROM METER TO MOST REMOTE FIXTURE (FT):	1000		
FRICTION LOSS PRESSURE AVAILABLE (PSI):	27.00		
MAXIMUM ALLOWABLE FRICTION LOSS (PSI/100 FT):	2.16		
MINIMUM REQUIRED 'WATER' PIPE SIZE (INCHES):	2		
MINIMUM REQUIRED 'SEWER' PIPE SIZE (INCHES):	4		

SIZE: TYPE L COPPER		CW MAX FLOW		CW FIXTURE UNIT	HW MAX FLOW		HW FIXTURE UNIT
NOMINAL DIAMETER (INCHES)	INTERNAL DIAMETER	GPM	FPS	FLUSH TANK	GPM	FPS	
1/2	0.545	1.5	2.0	0	1.5	2.0	0
3/4	0.785	3.8	2.5	4	3.8	2.5	4
1	1.025	7.7	3.0	10	7.7	3.0	10
1-1/4	1.265	13.4	3.4	18	13.4	3.4	18
1-1/2	1.505	21.2	3.8	32	21.2	3.8	32
2	1.985	43.9	4.6	103	43.9	4.6	103
2-1/2"	2.465	77.6	5.2	264	74.4	5.0	245

(CALCULATIONS PER CPC APPENDIX A)

GAS SERVICE CALCULATION

APPLIANCE TYPE	NO.	INPUT PER	INPUT TOTAL		NOMINAL DIAMETER (INCHES)	MAX CAPACITY (CFH)
		BTU	BTU	CFH		
FIREPLACE	2	80000	160000	160	1/2	40
GAS RANGE	1	100000	100000	100	3/4	83
GAS DRYER (FUTURE)	1	35000	35000	35	1	157
OUTDOOR SPA	1	240000	240000	240	1-1/4	322
GAS WH	1	200000	200000	200	1-1/2	482
					2	928
TOTAL				735.0		

GAS SERVICE TYPE:	NATURAL GAS	CALCULATIONS PER CPC TABLE 1215.2(1)
PRESSURE AVAILABLE AT METER:	< 2 PSI	RUNOUTS TO APPLIANCES LESS THAN 3FT TO BE THE SAME SIZE AS APPLIANCE CONNECTION. S.O.V. AHEAD OF UNION, WITHIN 3FT OF EACH APPLIANCE. S.O.V. AND UNION SHALL BE AGA APPROVED.
EQUIVALENT PIPE LENGTH FROM METER TO MOST REMOTE APPLIANCE (FT	150	
MINIMUM REQUIRED 'GAS MAIN' PIPE SIZE (INCHES):	2	

PLUMBING LEGEND

—CW—	COLD WATER
—HW—	HOT WATER
—NG—	NATURAL GAS
SS	SANITARY SEWER
SSV	SANITARY SEWER VENT
VTR	VENT THRU ROOF
AFF	ABOVE FINISHED FLOOR
BF	BELOW FLOOR
FA, TB	FROM ABOVE, TO BELOW
FB, TA	FROM BELOW, TO ABOVE
FU	FIXTURE UNITS
GPM	GALLONS PER MINUTE
TMV	THERMOSTATIC MIXING VALVE
	POC – POINT OF CONNECTION
	GAS POC
	COLD WATER POC
	CONDENSATE POC
	CLEANOUT
	HOSE BIBB
	SHUT-OFF VALVE
	PUMP

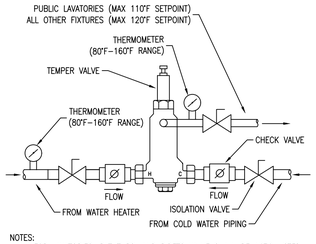

NOTES:
1. FOR LAVATORIES, BATHTUBS, AND BIDETS VALVE SHALL BE 1070 LISTED
2. FOR SHOWERS VALVE SHALL BE ASSE 1016 LISTED

THERMOSTATIC MIXING VALVE 1 P0

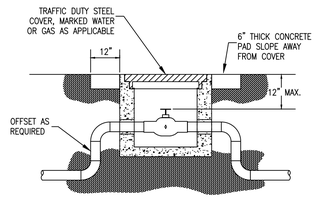

SHUT-OFF VALVE 2 P0

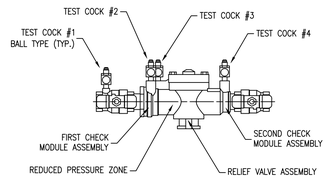

BACKFLOW PREVENTER 3 P0

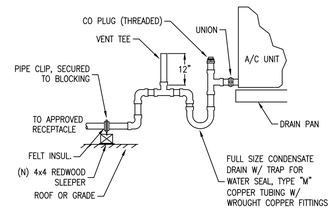

CONDENSATE DRAIN 4 P0

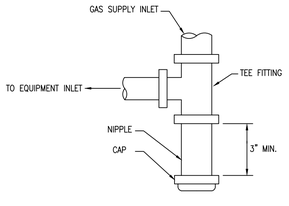

SEDIMENT TRAP 5 P0

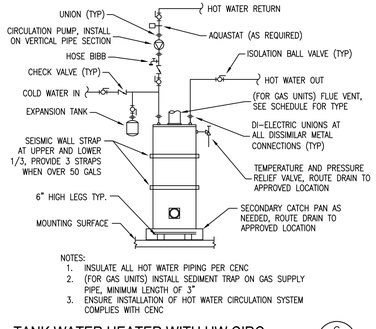

NOTES:
1. INSULATE ALL HOT WATER PIPING PER CENC
2. (FOR GAS UNITS) INSTALL SEDIMENT TRAP ON GAS SUPPLY PIPE, MINIMUM LENGTH OF 3"
3. ENSURE INSTALLATION OF HOT WATER CIRCULATION SYSTEM COMPLIES WITH CENC

TANK WATER HEATER WITH HW CIRC 6 P0

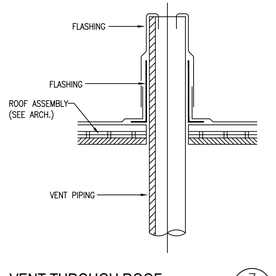

VENT THROUGH ROOF 7 P0

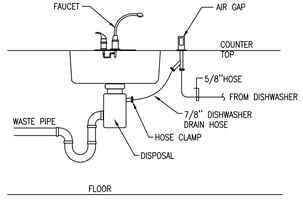

DISHWASHING MACHINE DRAIN 8 P0

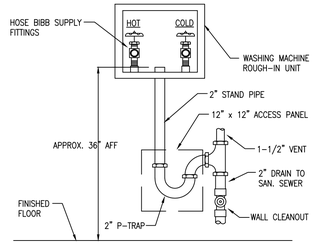

WASHING MACHINE HOOK-UP 9 P0

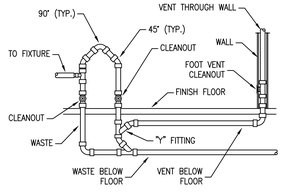

ISLAND VENT 10 P0

REVISION	DESCRIPTION	DATE			
JOB NO. 24302	DRAWN EEM	CHECKED	ORIGINAL DATE 01-30-2025		

REGISTERED PROFESSIONAL ENGINEER
STEVEN P. WISNIEWSKI
No.M32225
EXP.12-31-2026
MECHANICAL
STATE OF CALIFORNIA

ISSUED FOR	DATE
PERMIT	01-30-2025

OPTIMIZED ENERGY & FACILITIES CONSULTING, INC.
5734 Lonetree Boulevard, Rocklin, CA 95765
Office: (916) 626 5516 www.oeficinc.com

SERWIN RESIDENCE
24 TEMAHA
CARMEL, CA. 93923

SHEET TITLE
PLUMBING GENERAL NOTES, CALCS, & DETAILS

SHEET NO.
P0

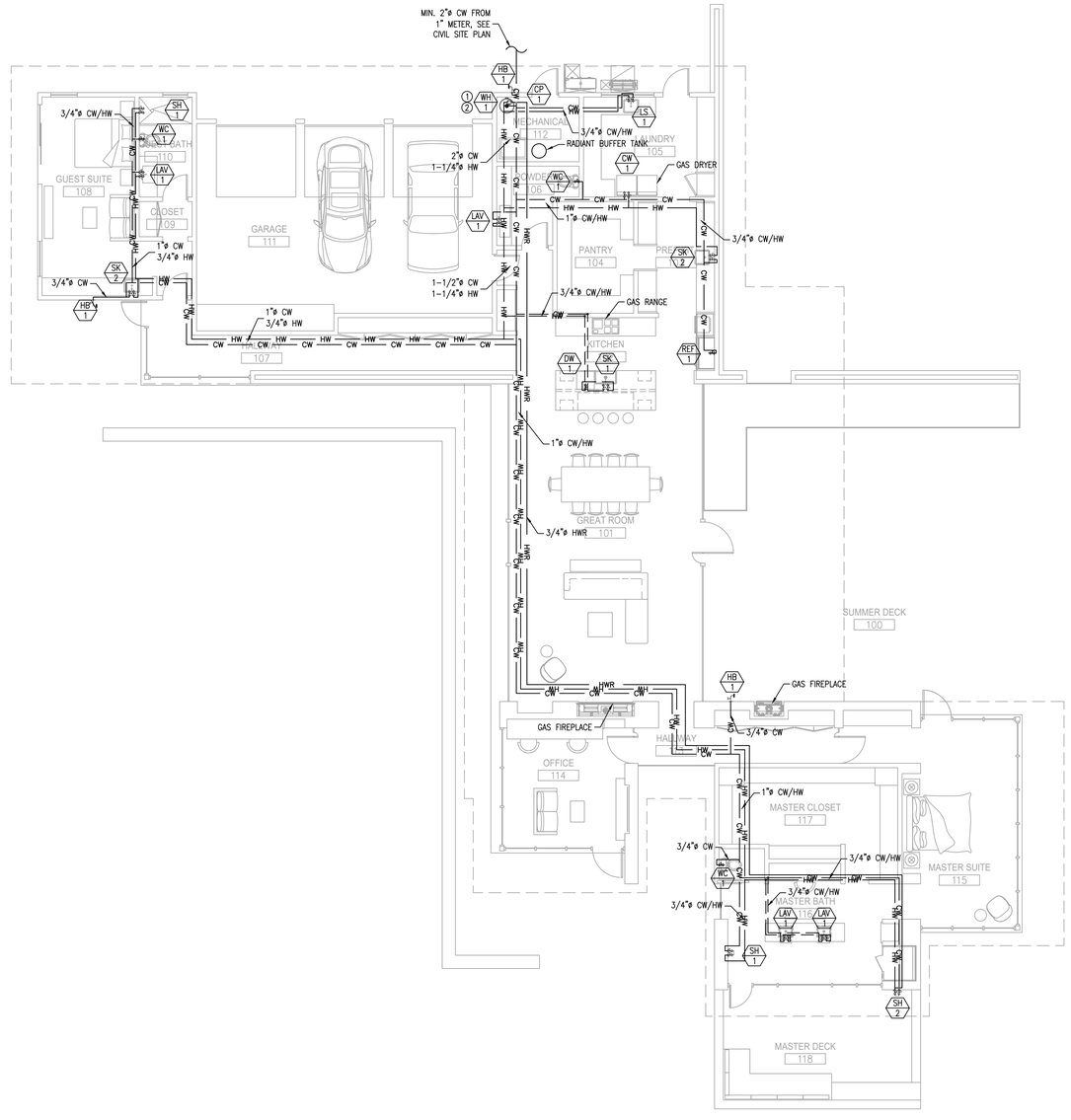

A PLUMBING PLAN - WATER & GAS
SCALE: 1/4"=1'-0"

NORTH

SHEET NOTES:

1. ALL EQUIPMENT, FITTINGS, FIXTURES, AND PIPING ARE (N) U.O.N.
2. ALL PLUMBING FIXTURE FLOW RATES SHALL COMPLY WITH CGBC 4.303.1 & 4.303.2
3. ALL DOMESTIC HOT WATER POTABLE PIPING SYSTEMS SHALL BE INSULATED, AND THE INSULATION THICKNESS SHALL BE BASED ON THE CONDUCTIVITY RANGE IN TABLE 120.3-A. REFERENCE THE 2022 CALIFORNIA ENERGY CODE SECTION 150.0 (J).
4. NEW WATER PIPING SHALL NOT BE INSTALLED IN OR UNDER A CONCRETE SLAB RESTING ON GRADE AND NEW SLABS SHALL NOT BE INSTALLED OVER EXISTING WATER PIPING. EXCEPTION: SHORT BRANCHES THAT SERVE ONLY AN ISOLATED ISLAND TYPE FIXTURE.
5. ENSURE INSTALLATION OF BACKFLOW PREVENTION DEVICE
6. CONTROL VALVES AND SHOWER HEADS SHALL BE LOCATED ON THE SIDEWALL OF SHOWER COMPARTMENT OR OTHERWISE ARRANGED SO THAT THE SHOWERHEAD DOES NOT DISCHARGE DIRECTLY AT THE ENTRANCE TO THE COMPARTMENT AND THE BATHER CAN ADJUST THE VALVES PRIOR TO STEPPING INTO THE SHOWER SPRAY PER CPC 408.9.
7. ENSURE ALL HOSE BIBBS HAVE APPROVED ANTI-SIPHON DEVICE PER CPC 603.3
8. PROTECT ALL PLASTIC AND COPPER PIPING RUNNING THROUGH FRAMING MEMBERS WITHIN 1" OF EXPOSED FRAMING WITH MIN. 18 GAUGE STEEL NAIL PLATES

KEY NOTES:

1. INSTALL TMV-1 TO ENSURE TEMPERATURE NO GREATER THAN 120°F. PROVIDE ISOLATION VALVES WITH HOSE BIBBS TO ALLOW FOR FLUSHING
2. 2"ø CW CONNECTIONS AT WATER HEATER

REVISION	DESCRIPTION	DATE

JOB NO. 24302 | DRAWN EEM | CHECKED | ORIGINAL DATE 01-30-2025

REGISTERED PROFESSIONAL ENGINEER
STEVEN P. WISNIEWSKI
No.M32225
EXP.12-31-2026
MECHANICAL
STATE OF CALIFORNIA

ISSUED FOR: PERMIT | DATE: 01-30-2025

OPTIMIZED ENERGY & FACILITIES CONSULTING, INC.
5734 Lonetree Boulevard, Rocklin, CA 95765
Office: (916) 626 5516 www.oefcinc.com

SERWIN RESIDENCE

24 TEMAHA
CARMEL, CA. 93923

SHEET TITLE: PLUMBING PLAN - WATER & GAS

SHEET NO. P1

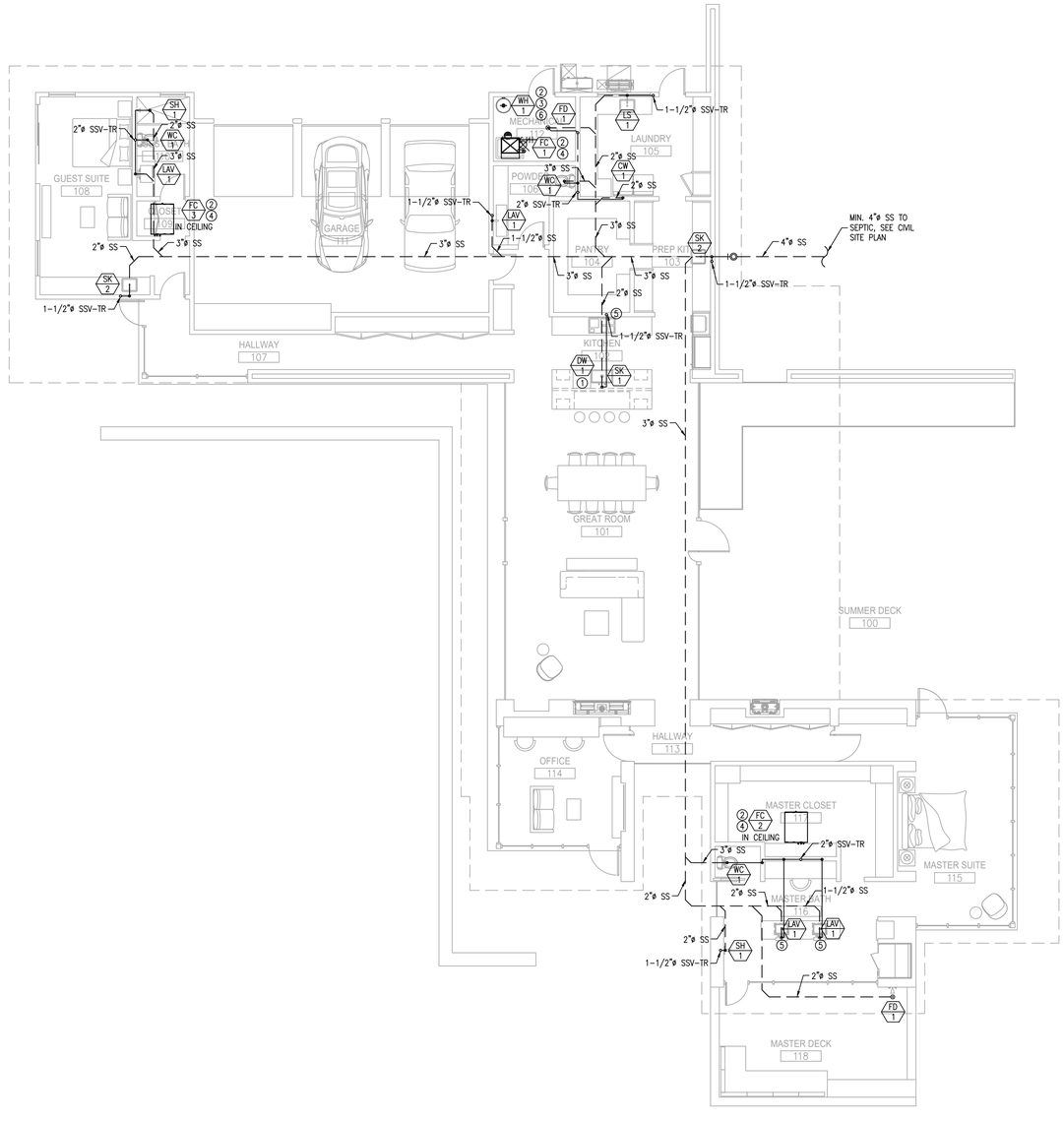

A PLUMBING PLAN - SEWER & VENT
SCALE: 1/8"=1'-0"

NORTH

SHEET NOTES:

1. ALL EQUIPMENT, FITTINGS, FIXTURES, AND PIPING ARE (N) U.O.N.
2. ENSURE 1/4" PER 1 FT. SLOPE FOR SANITARY SEWER PIPING
3. ENSURE MINIMUM 1/8" PER FOOT SLOPE FOR ALL CONDENSATE PIPING AND INSTALL PER CPC 814. ALL CONDENSATE PIPING SHALL BE 3/4"ø U.O.N. OR LARGER IF RECOMMENDED BY THE MANUFACTURER
4. ENSURE CLEANOUT TO GRADE EXISTS
5. PROVIDE WALL CLEANOUTS AT ALL LAVATORIES AND HAND SINKS
6. NO UNDER-FLOOR CLEANOUT SHALL BE LOCATED MORE THAN 5 FEET FROM AN ACCESS DOOR, TRAP DOOR, OR CRAWL HOLE. CPC 707.9

KEY NOTES:

1. DISHWASHER TO DRAIN TO GARBAGE DISPOSAL IN SINK
2. PVC CONDENSATE TO DRAIN TO APPROVED RECEPTOR
3. RELIEF VALVE TO DRAIN TO APPROVED LOCATION
4. SECONDARY CONDENSATE FROM SECONDARY CONTAINMENT PAN, DRAIN TO VISIBLE LOCATION PER CMC 310.2(2)
5. PROVIDE FOOT VENT CLEANOUT FOR ISLAND SINK PER CPC 909
6. CPVC CONDENSATE FOR CONDENSING GAS APPLIANCE TO DRAIN TO APPROVED RECEPTOR

REVISION	DESCRIPTION	DATE

JOB NO. 24302 | DRAWN EEM | CHECKED | ORIGINAL DATE 01-30-2025

REGISTERED PROFESSIONAL ENGINEER
STEVEN P. WISNIEWSKI
No.M32225
EXP.12-31-2026
MECHANICAL
STATE OF CALIFORNIA

ISSUED FOR: PERMIT | DATE: 01-30-2025

OPTIMIZED ENERGY & FACILITIES CONSULTING, INC.
5734 Lonetree Boulevard, Rocklin, CA 95765
Office: (916) 626 5516 www.oefcinc.com

SERWIN RESIDENCE
24 TEMAHA
CARMEL, CA. 93923

SHEET TITLE: PLUMBING PLAN - SEWER & VENT

SHEET NO. P2

This page intentionally left blank