Exhibit A

This page intentionally left blank.

DRAFT RESOLUTION

Before the Zoning Administrator
in and for the County of Monterey, State of California

In the matter of the application of:
ROMAN CATHOLIC BISHOP OF MTY (PLN220098)

RESOLUTION NO. 25-

Resolution by the County of Monterey Zoning Administrator:

1) Finding that a remodel and addition to an existing church qualifies for a Class 3 Categorical Exemption pursuant to CEQA Guidelines sections 15303, and none of the exceptions in section 15300.2 apply to the project; and
2) Approving an Amendment to Use Permit No. ZA-3189 to allow:
   a. a remodel and addition to an existing church (Building "B") consisting of a 5,945 square foot interior remodel on the first floor, a 531 square foot addition to the first floor, and a 6,620 square foot addition to the second floor;
   b. Installation of a 44 square foot onsite sign; and
   c. a modification to parking standards by:
      i. allowing off-street parking to be shared across two properties; and
      ii. reducing the total parking requirement from 199 spaces to 110 spaces.

[PLN220098 ROMAN CATHOLIC BISHOP OF MTY, 100 Salinas Road, North County Area Plan (117-323-011-000 and 117-323-012-000)]

The ROMAN CATHOLIC BISHOP OF MTY application (PLN220098) came on for a public hearing before the County of Monterey Zoning Administrator on September 11, 2025. Having considered all the written and documentary evidence, the administrative record, the staff report, oral testimony, and other evidence presented to the County of Monterey Zoning Administrator finds and decides as follows:

FINDINGS

1. FINDING: **CONSISTENCY** – The Project, as conditioned, is consistent with the applicable plans and policies which designate this area as appropriate for development.

EVIDENCE: a) During the course of review of this application, the project has been reviewed for consistency with the text, policies, and regulations in:

- the 2010 Monterey County General Plan;
- The North County Area Plan; and
- Monterey County Zoning Ordinance (Title 21).

No conflicts were found to exist. No communications were received during the course of review of the project indicating any inconsistencies with the text, policies, and regulations in these documents.

b) Allowed Use / Project Scope. The property is located at 100 Salinas Road at Assessor's Parcel Numbers 117-323-011-000 and 117-323-012-000. The property has a split zoning of High Density Residential with a density of 8 units an acre and Light Commercial or "HDR/8|LC", which allow public and quasi-public uses such as churches, subject to a Use Permit (Title 21 section 21.10.050.D and 21.18.060.N, respectively).

On Assessor's Parcel Number 117-323-012-000, there are two existing connected structures, Buildings "A" and "B" of Our Lady of the Assumption Church in Pajaro. The oldest available HCD-Planning records for the property is Use Permit ZA-3189, which allowed additions to both of these buildings in 1977. On Assessor's Parcel Number 117-323-011-000, there's an existing residence/rectory for the church, Building "C". A subsequent Use Permit, ZA-7265, was approved in 1989 to allow detached classroom trailers on Assessor's Parcel Number 117-323-011-000, however, none of these proposed classroom trailers are present on the site today. All three buildings, A, B, and C, are on the LC-zoned portion of the property.

The project proposes a remodel and addition on church Building "B", the parish hall, consisting of a 531 square foot addition to the first floor, and a 6,620 square foot addition second story with offices/religious classrooms and a catechesis. The LC zoning allows public and quasi-public uses, such as churches, subject to a Use Permit.

- A Use Permit exists for the church use, ZA-3189. In accordance with Title 21 section 21.74.120.B., this amendment is being processed in the same manner as the original Use Permit, and will replace it. See Finding No. 7.
- The project also requires modifications to parking standards, which is allowable subject to a Use Permit. See Finding No. 4.
- The project includes installation of a 44 square foot sign, which is allowable subject to a Use Permit. See subsequent evidence "g".

Therefore, all proposed uses are allowable for the site.

c) Lot Legality (Assessor's Parcel Number 117-323-011-000). Assessor's Parcel Number 117-323-011-000 is shown in its present configuration in the map of "Subdivision No. 2 of Land of Estate of Fanny C. Porter" Volume 5 Cities and Towns, Page 63, recorded on January 8, 1951. Therefore the County recognizes it as a legal lot of record.

d) Lot Legality (Assessor's Parcel Number 117-323-012-000). Assessor's Parcel Number 117-323-012-000 is shown in its present configuration as a 0.87 acre (37,897 square feet) parcel in the 1964 Assessor's Map Book, under separate ownership as shown in Page 368 of the 1964-1965 Assessor's Ownership Book. This property is also shown on the Record of Survey recorded on May 7th, 1991 in Volume 16 Surveys Page 225.

Said survey depicts the property as those lands conveyed by deed in Volume 1229 of Original Records, Page 67, and Volume 1677 Original Records Page 87. These documents were recorded in 1950 and 1956, respectively. The 1956 zoning plan of Section 10-7A of Monterey County shows the lands currently zoned as "HDR/8" as "R-1", and the lands currently zoned as "LC" as "C-1-P". The zoning ordinance in effect at the time, Ordinance No. 911, had a minimum parcel size of 6,000 square feet for R-1 zoning and 2,000 square feet for C-1 zoning, and the subdivision ordinance at that time, Ordinance No. 546, did not regulate the creation of four or fewer parcels as a "subdivision". Therefore, the County recognizes the parcel as a legal lot of record.

e) General Development Plan. Cumulatively the properties are 1.6 acres. Title 21 section 21.18.030.A indicates a General Development Plan is required if a site is greater than 1 acre. However, in this case the Director of Planning waived the requirement for a General Development Plan pursuant to Title 21 section 21.18.030.E., as preparation of a General Development Plan for an existing church would not advance the purposes of the light commercial zoning.

f) Development Standards. Development standard for the LC zoning where Building "B" is located can be found in Title 21 section 21.18.070. The proposed project is consistent with the applicable development standards, as discussed in subsequent evidences "g" through "i".

g) Setbacks. Setbacks in the LC zoning are established by surrounding land use, provision of adequate parking and landscaping, and other site design features (Title 21 section 21.18.070.A.3.). In this case, the church addition on Building A will front directly onto the sidewalk. This is consistent with the existing church the surrounding land use context, which has a mix of land uses, many of which front directly onto the street or sidewalk.

h) Building Coverage Assessor's Parcel Number 117-323-012-000. The maximum building coverage in the LC zoning is 50%. The combined coverage of Buildings "A" and "B" is 14,456 square feet, while the total square footage of Assessor's Parcel Number 117-323-012-000 is 37,897 square feet, meaning that lot coverage on Assessor's Parcel Number 117-323-012-000 will be 38.15%.

i) Building Coverage Assessor's Parcel Number 117-323-011-000. The maximum building coverage in the LC zoning is 50%. The coverage of Building "C" is 3,229 square feet, while the size of Assessor's Parcel Number 117-323-011-000 is 34,412 square feet, meaning the lot coverage on Assessor's Parcel Number 117-323-011-000 is 9.38%.

j) Building Height. The maximum allowable height in the LC zoning is 35 feet, while the addition proposed to Building B is 35 feet tall. Condition No. 6 (Height Verification) has been applied to ensure that the structure complies with the height maximum.

k) Regulations for Parking. Together the properties have adequate parking necessary to serve peak use of the church facilities. However, modifications to parking standards are required to allow the parking calculation to be shared across the properties and to allow a reduction in total parking requirements. In this case, the church is within walking

distance for many residents of Pajaro and the church has indicated that the Building A and the parish hall (Building B) will not be used at the same time thus the demand for parking does not align with the zoning ordinance parking requirements. See Finding No. 4 for additional information about parking.

l) Sign Regulations. The project includes a 44 square foot sign on the LC zoned portion of the property, on the south elevation of Building B. The sign is a directional sign with metal letters over a stone veneer which denotes the lounge and offices of the church. In accordance with Title 21 section 21.60.090, signs not exceeding 75 square feet and appurtenant to and allowed use are allowable subject to a Use Permit. The sign is on the south-facing side of the building, which faces the parking lot and is minimally visible to the public right of way.

m) Land Use Advisory Committee (LUAC) Review. The project was not referred to the North County Land Use Advisory Committee. Based on the LUAC Guidelines in Board of Supervisors Resolution 15-043, the application did not warrant referral as it is categorically exempt from CEQA, and doesn't include a lot line adjustment, variance, or design approval subject to a public hearing.

n) The property is mapped as being highly sensitive to archaeological resources, however, there are no known archaeological resources within 750 feet of the site, and the site has already been disturbed by the construction of the church and parking lots. Ground borings from the geotechnical report identified fill between 2.5 and 3 feet of soil depth. Therefore, the County's standard Condition No. 3, which requires work be halted if any previously unidentified resources are found during excavation or earthwork, is sufficient to prevent impacts to archaeological resources.

o) The project planner conducted a site inspection on April 20, 2023 to verify that the project on the subject parcel conforms to the plans listed above.

p) The application, project plans, and related support materials submitted by the project applicant to Monterey County HCD-Planning found in Project File PLN220098.

2. FINDING: **SITE SUITABILITY –** The site is physically suitable for the proposed development and/or use.

EVIDENCE:

a) The project has been reviewed for site suitability by the following departments and agencies: HCD-Planning, HCD-Engineering Services, HCD-Environmental Services, the Environmental Health Bureau, and the North County Fire Protection District. County staff reviewed the application materials and plans to verify that the project on the subject site conforms to the applicable plans and regulations, and there has been no indication from these departments/agencies that the site is not suitable for the development. Conditions recommended have been incorporated.

b) Staff identified the need for technical analyses related to traffic and geotechnical conditions. The following reports have been prepared:

- "VMT Assessment for the Proposed Our Lady of Assumption Church Expansion in Pajaro, California" (LIB230040) prepared by Luis Descanzo, Robert Del Rio, T.E. Gilroy, CA, January 23, 2023.
- "Limited Geotechnical Investigation" (LIB220316) prepared by Robert Hasseler, P.E., Watsonville, CA, July 19, 2019.

County staff independently reviewed these reports and concurs with their conclusions. There are no physical or environmental constraints that would indicate that the site is not suitable for the use. All development shall be in accordance with these reports.

c) Staff conducted a site inspection on April 20, 2023 to verify that the site is suitable for this use.

d) The application, project plans, and related support materials submitted by the project applicant to Monterey County HCD-Planning found in Project File PLN220098.

3. FINDING: **HEALTH AND SAFETY –** The establishment, maintenance, or operation of the project applied for will not under the circumstances of this particular case be detrimental to the health, safety, peace, morals, comfort, and general welfare of persons residing or working in the neighborhood of such proposed use, or be detrimental or injurious to property and improvements in the neighborhood or to the general welfare of the County.

EVIDENCE: a) The project was reviewed by HCD-Planning, HCD-Engineering Services, HCD-Environmental Services, Environmental Health Bureau, and North County Fire Protection District. The respective agencies have recommended conditions, where appropriate, to ensure that the project will not have an adverse effect on the health, safety, and welfare of persons either residing or working in the neighborhood.

b) Necessary public facilities will be provided. The property is and will continue to be served by Pajaro County Sanitation District (sewer) and Pajaro Sunny Mesa Community Services District (potable water). The project will include additional water and wastewater fixtures from the second-story bathroom, increasing from 4 sinks and 8 lavatories to 8 sinks and 16 lavatories. The applicant submitted bills from the respective utility purveyors, which EHB reviewed and determined adequate to verify that the property is served. Additionally, the applicant provided a Can/Will serve letter from the Pajaro Sunny Mesa Community Services District, which stated that adequate water will be available to accommodate the additional uses. The property has access to the County Road network on Bishop Street and Salinas Road.

c) The project is in FEMA floodzone "AO". As part of the building permit review, the project will be required to demonstrate consistency with Monterey County Code Chapter 16.16, Regulations for Floodplains to the satisfaction of Environmental Services, including providing an updated FEMA elevation certificates and a substantial improvements determination. Pursuant to Section 16.16.050.C.2, *"New construction and substantial improvement of any structure in Zone AO shall have the lowest floor, including basement, elevated above the highest adjacent grade at least one (1) foot higher than the depth number specified in feet on the FIRM, or at least two (2) feet if no depth number is specified.*

Nonresidential structures may meet standards in Section 16.16.050.C.3". Section 16.16.050.C.3 allows for nonresidential structures to be floodproofed so that the structure is watertight with walls substantially impermeable to the passage of water to a minimum of one foot above the base flood elevation. The proposed development will be floodproofed using a flood panel super flood log system as shown in the project plans, which were reviewed by Environmental Services for conformance with Title 16. A Certificate Elevation has been provided by the applicant identifying a base flood elevation of 2 feet and the proposed floodproofing will be designed to be one foot above this. Installation of this system and conformance with Chapter 16.16 will be ensured through the construction permit required to be obtained for the development. Therefore, the proposed project complies with the applicable regulations for projects within the "AO" FEMA floodzone.

d) In accordance with 2010 General Plan Safety Element Policy S-1.7, a geotechnical investigation was prepared by Robert Hasseler, P.E., of Haro, Kasunich and Associates, Inc., to address the potential for geotechnical hazards to impact the project. The report indicated that primary geotechnical concerns at the project site include weak soils in the foundation zones, strong seismic shaking, liquefaction, and lateral spreading; however, it concluded that soils would be suitable for the development, given the recommendations in the report were followed, which include criteria for general site grading and foundations.

e) Staff conducted a site inspection on April 20, 2023 to verify that the site is suitable for this use.

f) The application, project plans, and related support materials submitted by the project applicant to Monterey County HCD-Planning found in Project File PLN220098.

4. FINDING: **MODIFICATION TO PARKING STANDARDS –** The reduced parking will be adequate to accommodate all parking needs generated by the use, and the modification to allow off-site parking is consistent with Title 20 Section 21.58.

EVIDENCE:

a) Monterey County Code Chapter 21.58 establishes regulations for parking, including required numbers of off-street spaces for given land uses and development standards for parking.

b) According to Title 21 section 21.58.040, the required number of off-street spaces for the church would be 199 spaces, as described below:
   - 110 spaces for Building A, the church, based on 1 space per 4 seats for a Church use with 441 seats.
   - 87 spaces for Building B, the parish hall, based on the following calculation:
     - 1 space per 35 square feet for the 1,250 square feet of the multi-purpose hall and 180 square foot lounge area (similar to a community center or church without fixed seating);
     - 1 space per 250 square feet for the 375 square feet of offices on the first floor;
     - 1 space per 250 square feet for the 1,919 square feet of offices on the second floor; and

- 1 space per 50 square feet for the 1,855 square foot centralized lounge area on the second floor (similar to a meeting hall).

- 2 spaces for Building C the existing residence/rectory building, based on 2 spaces a unit for detached single family uses.

c) There are a total of 114 parking spaces available on Assessors' Parcel Numbers 117-323-012-000 and 117-323-011-000, which is less than the calculated parking demand of 199. Per Title 21 section 21.58.050.L off-street shall not be considered as providing parking facilities for any other use, unless it is determined by the appropriate authority that the particular grouping of uses is such that the hours of operation are substantially different. However, in this case, peak parking demand would be the use of the main church (Building A) for Sunday mass (110 spaces), which would not occur at the same time as the use of the parish hall (Building B). Therefore, the reduced parking requirement of 110 spaces would be adequate to satisfy the parking demand generated by the use.

d) There's an existing parking agreement between the County and the applicant for the adjoining property with the Pajaro Branch Library (Assessor's Parcel Number 117-323-013-000), which would make another 26 spaces available. However, this agreement is not factored into the calculation of required parking spaces as the agreement confers the applicant the right to terminate the agreement.

e) Title 21 section 21.58.050.D requires that all parking be provided on the same site as the use that it relates to, unless a Use Permit is approved. In this case, the parking is spread across two parcels, 117-323-012-000 and 117-323-011-000. However, both properties are contiguous, with the parking lot being shared across both properties; all spaces are in immediate walking distance of the church; and both properties are held and under common ownership by the applicant. Therefore, allowing the parking to be spread over two properties is supportable in this case.

f) For parking areas with more than 20 spaces, Title 21 section 21.58.050.M requires 1 bicycle rack space for every 10 parking spaces. The project includes 114 spaces and 16 bicycle spaces, in conformance with this requirement.

g) The project planner conducted a site inspection on April 20, 2023 to evaluate the parking conditions at the site.

h) The application, project plans, and related support materials submitted by the project applicant to Monterey County HCD-Planning found in Project File PLN220098.

5. FINDING: **NO VIOLATIONS –** The subject property is in compliance with all rules and regulations pertaining to zoning uses, subdivision, and any other applicable provisions of the County's zoning ordinance. No violations exist on the property.

EVIDENCE:

a) Staff reviewed Monterey County HCD-Planning and HCD-Building Services records and is not aware of any violations existing on subject property.

b) Staff conducted a site inspection on April 20, 2023 and researched County records to assess if any violation exists on the subject property.

c) The application, project plans, and related support materials submitted by the project applicant to Monterey County HCD-Planning found in Project File PLN220098.

6. FINDING: **CEQA (Exempt) –** The project is categorically exempt from environmental review and no unusual circumstances were identified to exist for the proposed project.

EVIDENCE:

a) California Environmental Quality Act (CEQA) Guidelines Section 15303 categorically exempts the construction of a limited number of new, small facilities or structures.

b) The project consists of the construction of a 5,945 square foot interior remodel on the first floor, a 531 square foot addition to the first floor, and a 6,620 square foot addition to the second floor of an existing church, consistent with the intent of this exemption.

c) None of the exceptions from CEQA Guidelines section 15300.2 apply to the project, as discussed in subsequent evidences "d" through "i".

d) The project is not located in an area where an environmental resource of hazardous or critical concern has been mapped.

e) The project, the construction of a second story on an existing church, within the allowable building development standards and not contributing to any environmental effects, will not contribute to any cumulative impacts.

f) The project does not create the possibility that the project will have a significant effect due to unusual circumstances.

g) The project is not located within view of a State scenic highway and would not damage any scenic resources such as trees or rock outcroppings. The nearest eligible State Scenic highway is Highway 1, which is approximately 1.78 miles from the site.

h) The project is not on a hazardous waste site compiled to pursuant to Section 65962.5 of the Government code.

i) The project would not impact any historical resources. The original construction date of the church is not known, however, assessor's records indicate it was built in 1963. However, the exterior façade was heavily modified in 1977, less than 50 years ago. The nearest identified historical resource is the Pajaro Branch Library building, the "Porter Valejo Masion" which is on the National Register of Historic Resources. However, the addition of the second story to the church will not detract from the historic character of the Porter Valejo Mansion. The church is approximately 50 feet from the mansion and is of a compatible scale.

j) No adverse environmental effects were identified during staff review of the development application during a site visit on April 20, 2023.

k) See supporting Finding Nos. 1 and 2. The application, project plans, and related support materials submitted by the project applicant to Monterey County HCD-Planning found in Project File PLN220098.

7. FINDING: **AMENDMENT –** The proposed amendment has been taken to the decision making body of the original permit and processed consistent with the original permit procedures.

EVIDENCE: a) On August 11, 1977 the Zoning Administrator approved a Use Permit to allow an addition to an existing church (Buildings A and B).

b) The Use Permit amended the allowed alterations to the existing church, which altered the façade and form of both buildings.

c) In accordance with Title 21 section 21.74.120.A, if the Director of planning feels the amendment is of a minor nature: 1) with no new environmental impacts, 2) with no increase in the severity of environmental impacts already identified, 3) generally in keeping with the action of the appropriate authority, 4) that would have only an inconsequential effect on land in relation to the approved permit, and 5) would meet all relevant site development standards, then the amendment shall be considered to be a "minor amendment" and may be approved by the Director of Planning. In this case, the project would not meet the development standards for parking requirements, which elevates the review authority to the Zoning Administrator consistent with the original permit procedures.

d) The previous permit did not have any attached conditions of approval, so there are no conditions of approval to carry forward through the amendment. PLN220098 would replace it.

e) The application, project plans, and related support materials submitted by the project applicant to Monterey County HCD-Planning found in Project File PLN220098.

8. FINDING: **APPEALABILITY –** The decision on this project may be appealed to the Planning Commission.

EVIDENCE: a) Pursuant to Title 21 section 21.80.040.B, the Planning Commission is the Appeal Authority to consider appeals from discretionary decisions of the Zoning Administrator.

DECISION

NOW, THEREFORE, based on the above findings and evidence, the Zoning Administrator does hereby:

1. Find that a remodel and addition to an existing church qualifies for a Class 3 Categorical Exemption pursuant to CEQA Guidelines sections 15303, and none of the exceptions in section 15300.2 apply to the project; and
2. Approve an Amendment to Use Permit ZA-3189 to allow:
    a. a remodel and addition to an existing church (Building "B") consisting of a 5,945 square foot interior remodel on the first floor, a 531 square foot addition to the first floor and a 6,620 square foot addition to the second floor;
    b. Installation of a 44 square foot onsite sign; and
    c. a modification to parking standards by:
        i. allowing off-street parking to be shared across two properties; and
        ii. reducing the total parking requirement from 199 spaces to 110 spaces.

All of which are in general conformance with the attached sketch and subject to the attached conditions, all being attached hereto and incorporated herein by reference.

PASSED AND ADOPTED this 11th day of September, 2025.

Mike Novo, AICP
Zoning Administrator

COPY OF THIS DECISION MAILED TO APPLICANT ON DATE

THIS APPLICATION IS APPEALABLE TO THE PLANNING COMMISSION.

IF ANYONE WISHES TO APPEAL THIS DECISION, AN APPEAL FORM MUST BE COMPLETED AND SUBMITTED TO THE SECRETARY OF THE PLANNING COMMISSION ALONG WITH THE APPROPRIATE FILING FEE ON OR BEFORE DATE.

This decision, if this is the final administrative decision, is subject to judicial review pursuant to California Code of Civil Procedure Sections 1094.5 and 1094.6. Any Petition for Writ of Mandate must be filed with the Court no later than the 90th day following the date on which this decision becomes final.

NOTES

1. You will need a building permit and must comply with the Monterey County Building Ordinance in every respect.

   Additionally, the Zoning Ordinance provides that no building permit shall be issued, nor any use conducted, otherwise than in accordance with the conditions and terms of the permit granted or until ten days after the mailing of notice of the granting of the permit by the appropriate authority, or after granting of the permit by the Board of Supervisors in the event of appeal.

   Do not start any construction or occupy any building until you have obtained the necessary permits and use clearances from Monterey County HCD-Planning and HCD-Building Services Department office in Salinas.

2. This permit expires 3 years after the above date of granting thereof unless construction or use is started within this period.

Form Rev. 1-27-2021

County of Monterey HCD Planning

DRAFT Conditions of Approval/Implementation Plan/Mitigation Monitoring and Reporting Plan

PLN220098

1. PD001 - SPECIFIC USES ONLY

Responsible Department: Planning

Condition/Mitigation Monitoring Measure: This Amended Use Permit (PLN220098) allows a remodel and addition to an existing church (Building “B”) consisting of a 5,945 square foot interior remodel on the first floor, a 531 square foot addition to the first floor and a 6,620 square foot addition to the second floor; Installation of a 44 square foot onsite sign; and a modification to parking standards by:
allowing off-street parking to be shared across two properties; and reducing the total parking requirement from 199 spaces to 110 spaces. The property is located at 100 Salinas Road, North County Area Plan (Assessor's Parcel Numbers 117-323-011-000 and 117-323-012-000). This permit was approved in accordance with County ordinances and land use regulations subject to the terms and conditions described in the project file. Neither the uses nor the construction allowed by this permit shall commence unless and until all of the conditions of this permit are met to the satisfaction of the Director of HCD - Planning. Any use or construction not in substantial conformance with the terms and conditions of this permit is a violation of County regulations and may result in modification or revocation of this permit and subsequent legal action. No use or construction other than that specified by this permit is allowed unless additional permits are approved by the appropriate authorities. To the extent that the County has delegated any condition compliance or mitigation monitoring to the Monterey County Water Resources Agency, the Water Resources Agency shall provide all information requested by the County and the County shall bear ultimate responsibility to ensure that conditions and mitigation measures are properly fulfilled. (HCD - Planning)

Compliance or Monitoring Action to be Performed: The Owner/Applicant shall adhere to conditions and uses specified in the permit on an on-going basis unless otherwise stated.

2. PD002 - NOTICE PERMIT APPROVAL

Responsible Department: Planning

Condition/Mitigation Monitoring Measure: The applicant shall record a Permit Approval Notice. This notice shall state:
"An Amendment (Resolution Number _____) was approved by Zoning Administrator for Assessor's Parcel Number 117-323-011-000 and 117-323-012-000 on September 11, 2025. The permit was granted subject to 9 conditions of approval which run with the land. A copy of the permit is on file with Monterey County HCD - Planning."

Proof of recordation of this notice shall be furnished to the Director of HCD - Planning prior to issuance of grading and building permits, Certificates of Compliance, or commencement of use, whichever occurs first and as applicable. (HCD - Planning)

Compliance or Monitoring Action to be Performed: Prior to the issuance of grading and building permits, certificates of compliance, or commencement of use, whichever occurs first and as applicable, the Owner/Applicant shall provide proof of recordation of this notice to the HCD - Planning.

3. PD003(A) - CULTURAL RESOURCES NEGATIVE ARCHAEOLOGICAL REPORT

Responsible Department: Planning

Condition/Mitigation Monitoring Measure: If, during the course of construction, cultural, archaeological, historical or paleontological resources are uncovered at the site (surface or subsurface resources) work shall be halted immediately within 50 meters (165 feet) of the find until a qualified professional archaeologist can evaluate it. Monterey County HCD - Planning and a qualified archaeologist (i.e., an archaeologist registered with the Register of Professional Archaeologists) shall be immediately contacted by the responsible individual present on-site. When contacted, the project planner and the archaeologist shall immediately visit the site to determine the extent of the resources and to develop proper mitigation measures required for recovery.
(HCD - Planning)

Compliance or Monitoring Action to be Performed: The Owner/Applicant shall adhere to this condition on an on-going basis.

Prior to the issuance of grading or building permits and/or prior to the recordation of the final/parcel map, whichever occurs first, the Owner/Applicant shall include requirements of this condition as a note on all grading and building plans. The note shall state "Stop work within 50 meters (165 feet) of uncovered resource and contact Monterey County HCD - Planning and a qualified archaeologist immediately if cultural, archaeological, historical or paleontological resources are uncovered."

When contacted, the project planner and the archaeologist shall immediately visit the site to determine the extent of the resources and to develop proper mitigation measures required for the discovery.

4. PD006(A) - CONDITION COMPLIANCE FEE

Responsible Department: Planning

Condition/Mitigation Monitoring Measure: The Owner/Applicant shall pay the Condition Compliance fee, as set forth in the fee schedule adopted by the Board of Supervisors, for the staff time required to satisfy conditions of approval. The fee in effect at the time of payment shall be paid prior to clearing any conditions of approval.

Compliance or Monitoring Action to be Performed: Prior to clearance of conditions, the Owner/Applicant shall pay the Condition Compliance fee, as set forth in the fee schedule adopted by the Board of Supervisors.

5. PD014(A) - LIGHTING - EXTERIOR LIGHTING PLAN

Responsible Department: Planning

Condition/Mitigation Monitoring Measure: All exterior lighting shall be unobtrusive, down-lit, harmonious with the local area, and constructed or located so that only the intended area is illuminated and off-site glare is fully controlled. The lighting source shall be shielded and recessed into the fixture. The applicant shall submit three (3) copies of an exterior lighting plan which shall indicate the location, type, and wattage of all light fixtures and include catalog sheets for each fixture. The lighting shall comply with the requirements of the California Energy Code set forth in California Code of Regulations Title 24 Part 6. The exterior lighting plan shall be subject to approval by the Director of HCD - Planning, prior to the issuance of building permits.
(HCD - Planning)

Compliance or Monitoring Action to be Performed: Prior to the issuance of building permits, the Owner/Applicant shall submit three copies of the lighting plans to HCD - Planning for review and approval. Approved lighting plans shall be incorporated into final building plans.

Prior to final/occupancy, the Owner/Applicant/Contractor shall submit written and photographic evidence demonstrating that the lighting has been installed according to the approved plan.

On an on-going basis, the Owner/Applicant shall ensure that the lighting is installed and maintained in accordance with the approved plan.

6. PD041 - HEIGHT VERIFICATION

Responsible Department: Planning

Condition/Mitigation Monitoring Measure: The applicant shall have a benchmark placed upon the property and identify the benchmark on the building plans. The benchmark shall remain visible on-site until final building inspection. The applicant shall provide evidence from a licensed civil engineer or surveyor to the Director of HCD - Building Services for review and approval, that the height of the structure(s) from the benchmark is consistent with what was approved on the building permit associated with this project. (HCD - Planning and HCD - Building Services)

Compliance or Monitoring Action to be Performed: Prior to the issuance of grading or building permits, the Owner/Applicant shall have a benchmark placed upon the property and identify the benchmark on the building plans. The benchmark shall remain visible onsite until final building inspection.

Prior to the foundation pre-pour inspection, the Owner/Applicant shall provide evidence from a licensed civil engineer or surveyor, to the Director of HCD - Building Services for review and approval, that the height of first finished floor from the benchmark is consistent with what was approved on the building permit.

Prior to the final inspection, the Owner/Applicant/Engineer shall provide evidence from a licensed civil engineer or surveyor, to the Director of HCD - Building Services for review and approval, that the height of the structure(s) from the benchmark is consistent with what was approved on the building permit.

7. PW0043 - REGIONAL DEVELOPMENT IMPACT FEE

Responsible Department: Public Works

Condition/Mitigation Monitoring Measure: Prior to issuance of building permits, applicant shall pay the Regional Development Impact Fee (RDIF) pursuant to Monterey Code Chapter 12.90. The fee amount shall be determined based on the parameters adopted in the current fee schedule.

Compliance or Monitoring Action to be Performed: Prior to issuance of Building Permits Owner/Applicant shall pay Monterey County Building Services Department the traffic mitigation fee. Owner/Applicant shall submit proof of payment to the HCD-Engineering Services.

8. PW0044 - CONSTRUCTION MANAGEMENT PLAN

Responsible Department: Public Works

Condition/Mitigation Monitoring Measure: The applicant shall submit a Construction Management Plan (CMP) to HCD-Planning and HCD-Engineering Services for review and approval. The CMP shall include measures to minimize traffic impacts during the construction/grading phase of the project.

CMP shall include, at a minimum, duration of the construction, hours of operation, truck routes, estimated number of truck trips that will be generated, number of construction workers, and on-site/off-site parking areas for equipment and workers and locations of truck staging areas. Approved measures included in the CMP shall be implemented by the applicant during the construction/grading phase of the project. (Public Works)

Compliance or Monitoring Action to be Performed: 1. Prior to issuance of the Grading Permit or Building Permit, Owner/Applicant/Contractor shall prepare a CMP and shall submit the CMP to the HCD-Planning and HCD- Engineering Services for review and approval.

2. On-going through construction phases Owner/Applicant/Contractor shall implement the approved measures during the construction/grading phase of the project.

9. PW0045 – COUNTYWIDE TRAFFIC FEE

Responsible Department: Public Works

Condition/Mitigation Monitoring Measure: Prior to issuance of building permits, the Owner/Applicant shall pay the Countywide Traffic Fee or the ad hoc fee pursuant to General Plan Policy C-1.8. The fee amount shall be determined based on the parameters in the current fee schedule.

Compliance or Monitoring Action to be Performed: Prior to issuance of Building Permits, the Owner/Applicant shall pay Monterey County HCD-Building Services the traffic mitigation fee. The Owner/Applicant shall submit proof of payment to HCD-Engineering Services.

This page intentionally left blank

OUR LADY OF ASSUMPTION CHURCH

100 SALINAS ROAD
(PAJARO) WATSONVILLE, CA 95076

1 LOCATION PLAN

N.T.S.

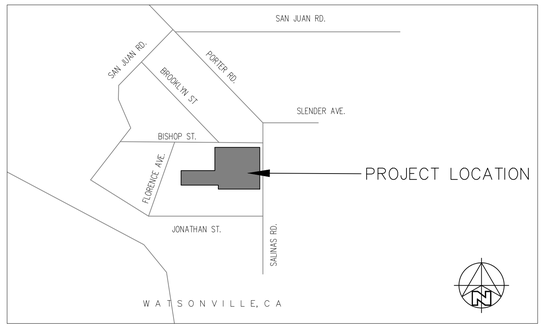

2 VICINITY MAP

N.T.S.

ABBREVIATIONS

AC.	ACOUSTIC	LT.	LIGHT
ADD.	ADDENDUM	L.W.C	LT. WGT. CONC..
ADD'N.	ADDITION	LVR.	LOUVER
ABC	AGG. BASE COURSE	JAN.	JANITOR
A.F.F.	ABOVE FINISH FLOOR	JT.	JOINT
A.M.F.	ABOVE MALL FLOOR	JST.	JOIST
AGG	AGGREGATE	K.P.	KICK PLATE
A/C	AIR CONDITIONING	MB.	MACHINE BOLT
AL.	ALUMINUM	M.C.	MECHANICAL
ALT.	ALTERNATE	M.C.B.	MTL. CORNER BEAD
AQMD.	AIR QUALITY	M.O.	MASONRY OPENING
A.B.	ANCHOR BOLT	MATL.	MATERIAL
arch.	ARCHITECT	MFR.	MANUFACTURER
ASP.	ASPHALT	MAX.	MAXIMUM
@	AT	MECH.	MECHANICAL
&	AND	MET.	METAL
BSMT.	BASEMENT	M.L.	METAL LATH
B.M.	BEAM	M.	METER
BLKG.	BLOCKING	MIN.	MINIMUM
BD.	BOARD	MLDG.	MOLDING
BOTT.	BOTTOM	MULL.	MULLION
BLDG.	BUILDING	N/A	NOT APPLICABLE
B.N	BOUNDARY NAILING	N.G.	NATURAL GRADE
CABT.	CABINET	NOM.	NOMINAL
C.I.P.	CAST-IN-PLACE	N.I.C.	NOT IN CONTRACT
C.B.	CATCH BASIN	N.T.S.	NOT TO SCALE
CLG	CEILING.	NO.	NUMBER
CEM.	CEMENT	OBS.	OBSCURE
C.L.	CENTER LINE	O.C.	ON CENTER
CER.	CERAMIC	OPNG.	OPENING
C.T.	CERAMIC TILE	O.A.	OVERALL
chan	CHANNEL	O.D.	OUTSIDE DIAMETER
CLR.	CLEAR	O.F.S.	OVERFLOW SCUPPER
C.O.	CLEAN OUT	O.F.D.	OVERFLOW DRAIN
CLOS.	CLOSET	O.F.G.I.	OWNER FURNISHED, GENERAL CONTRACTOR INSTALLED.
COL.	COLUMN	PTD.	PAINTED
CONC.	CONCRETE	PG.	PAGE
COND.	CONDITION	PR.	PAIR
CONN.	CONNECTION	PNL.	PANEL
CONST.	CONST.	PTN.	PARTITION
C.J.	CONTROL JOINT	d	PENNY
CONT.	CONTINUOUS	PL.	PLATE
CONTR.	CONTRACTOR	PLBG.	PLUMBING
CORR'G	CORRUGATED	PLYWD.	PLYWOOD
CTR.	COUNTER	PT.	POINT
CTSK.	COUNTERSUNK	P.O.C.	POINT OF CONNECTION
C.M.U.	CONC. MASONRY UNIT	P.T.D.F.	PRESSURE TREATED DOUGLAS FIR
D.G.	DECOMPOSED GRANITE	P.S.I.	POUNDS PER SQ. IN.
D.P.	DAMP PROOFING	P.S.F.	POUNDS PER SQ. FT.
DB.	DECIBEL	P.C.	PLUMBING CONTRACTOR
D.F.	DOUGLAS FIR	P.L.	PROPERTY LINE
DIAG.	DIAGONAL	RA.	RETURN AIR
DIA.	DIAMETER	RAD.	RADIUS
DIM.	DIMENSION	REG.	REGISTER
DISP.	DISPENSER	REQD.	REQUIRED
DOWEL.	DOWEL	REV.	REVISION
DN.	DOWN	REC.	RECOMMENDATION
D.S.	DOWN SPOUT	R.D.	ROOF DRAIN
DWG.	DRAWING	RFG.	ROOFING
EA.	EACH	RM.	ROOM
E.C.	ELECTRIC CONTRACTOR	RGH.	ROUGH
EL.	ELECTRIC	RND.	ROUND
E.W.C.	ELEC.WATER COOLER	S.A.	SUPPLY AIR
E.N.	EDGE NAILING	SCR.	SCREW
EQ.	EQUAL	SECT.	SECTION
EQUIP.	EQUIPMENT	SEL.	SELECT
EXH.	EXHAUST	SHT.	SHEET
EXPAN.	EXPAND	SDG.	SLIDING
E.J.	EXPANSION JOINT	SIM.	SIMILAR
(E)	EXISTING	SLDG.	SLIDING
EXT.	EXTERIOR	SM.	SMOOTH
FT.	FEET	SPEC.	SPECIFICATION
FIN.	FINISH	SPL.	SPLASH
F.N.	FACE NAILING	SQ.	SQUARE
FIX.	FIXTURE	STD.	STANDARD
FLG.	FLASHING	ST. STL.	STAINLESS STEEL
FLR.	FLOOR	STRUC.	STRUCTURE
F.D.	FLOOR DRAIN	SUSP.	SUSPENDED
FLOUR.	FLUORESCENT	SW. B.D.	SWITCHBOARD
FTG.	FOOTING	T&B	TOP & BOTTOM
FND.	FOUNDATION	TELCO	TELEPHONE COMPANY
FR.	FRAME	T.G.	TEMPERED GLASS
F.H.C.	FIRE HOSE CABINET	T.C.	TOP OF CURB
F.S.E.C.	FOOD SERVICE	T.O.	TOP OF
GA.	GAUGE	T.O.P.	TOP OF PARAPET
G.I.	GALVANIZED IRON	T.S.D.	TOP OF STEEL DECK
GL.	GLASS	T.T.P.	TOP OF TAPERED PLYWD.
GD.	GRADE	TYP.	TYPICAL
GRL.	GRILLE	U.O.N.	UNLESS OTHERWISE NOTED
GRD	GROUND	U.T.R.	UP THROUGH ROOF
GYP.	GYPSUM	V.	VENT
GEN.	CONTRACTOR G.C.	VERT.	VERTICAL
HR.	HAND RAIL	V.G.	VERTICAL GAIN
HDW.	HARDENER	VEST.	VESTIBULE
HDWD.	HARDWARE	V.C.T.	VINYL COMPOSITION TILE
HTR.	HARDWOOD	VCP.	VITREOUS CLAY PIPE
HT.	HEATER	W.W.M.	WELDED WIRE MESH
H.P.	HIGH POINT	W.C.	WATER CLOSET
H.M.	HOLLOW METAL	W.H.	WATER HEATER
HORIZ.	HORIZONTAL	W.F.	WIDE FLANGE
H.B.	HOSE BIB	W/	WITH
H.W.	HOT WATER	W/O	WITHOUT
IN.	INCH	WD.	WOOD
I.D.	INSIDE DIAMETER	WDW.	WINDOW
SUL.	INSULATION IN	W.R.	WATER RESISTANT
INT.	INTERIOR	W.P.	WATER PROOF
INV.	INVERT		
LAM.	LAMINATED		
LDG.	LANDING		
LTH.	LATH		
LAV.	LAVATORY		
LG	LENGTH.		
L.O.R.	LANDLORD OF RECORD		

PROJECT NOTES

1. EXACT LOCATION OF EXIT SIGNS MAY ALTERED DURING FINAL INSPECTIONS.
2. EXTRA EXIT SIGNS MAY BE REQUIRED DURING FINAL INSPECTIONS.

GENERAL NOTES

1. ALL CONSTRUCTION, WORKMANSHIP AND MATERIALS SHALL CONFORM WITH THE REQUIREMENTS OF THE 2016 EDITION C.B.C., AND ANY OTHER GOVERNING CODE.
2. THE GENERAL CONTRACTOR IS RESPONSIBLE FOR THE VERIFICATION OFF ALL DIMENSIONS, GRADES AND OTHER CONDITIONS, AND HE SHALL CORRELATE AT THE JOB SITE ALL SUCH ITEMS. HE SHALL REPORT ANY DISCREPANCIES TO ARCHITECT FOR CLARIFICATION AND CORRECTION PRIOR TO BEGINNING ANY ITEM OF WORK.
3. THE DESIGNER AND ENGINEER SHALL BE NOTIFIED OF ANY OMISSIONS OR DISCREPANCIES IN THE WORKING DRAWING AND/OR SPECIFICATIONS BEFORE PROCEEDING WITH ANY WORK SO INVOLVED.
4. ALL DIMENSIONS TAKE PRECEDENCE OVER SCALE SHOWN ON PLANS, SECTIONS AND DETAILS.
5. SPECIFIC NOTES AND DETAILS TAKE PRECEDENCE OVER STRUCTURAL NOTES AND TYPICAL DETAILS.
6. WHERE SPECIFIC DETAILS ARE NOT PROVIDED, CONSTRUCTION CAN FOLLOW DETAILS FOR SIMILAR CONDITIONS, UNLESS CONFLICTS OCCUR.
7. THE CONTRACTOR SHALL BE RESPONSIBLE FOR THE DESIGN, INSTALLATION AND MAINTENANCE OF ALL BRACING AND SHORING REQUIRED DURING CONSTRUCTION UNTIL ALL CONSTRUCTION IS FINALIZED.
8. JOB SITE SAFETY IS THE SOLE RESPONSIBILITY OF THE CONTRACTOR.
9. SEE ARCHITECTURAL DRAWINGS FOR THE SIZE AND LOCATION OF ALL DOOR AND WINDOW OPENINGS, LOCATION OF NONBEARING PARTITIONS, ROOF AN FLOOR ELEVATIONS, ROOF SLOPES, ARCHITECTURAL FINISHES, AND OTHER RELATED INFORMATION NOT INDICATED ON THE STRUCTURAL DRAWINGS.
10. SEE MECHANICAL, ELECTRICAL AND/OR ARCHITECTURAL DRAWING FOR THE SIZE AND LOCATION OF PIPES, CONDUITS, FLOOR DRAINS, VENTS, DUCTS, AND OTHER SIMILAR PENETRATIONS NOT INDICATED ON THE STRUCTURAL DRAWINGS. FIRE SPRINKLERS- PROVIDE SPRINKLER DRAWINGS TO THE FIRE MARSHAL FOR REVIEW & APPROVAL PRIOR TO INSTALLATION.
11. EPOXY AND ANCHOR BOLTS: ESPECIAL INSPECTION REQUIRED FOR EPOXY SET ANCHOR BOLTS.
12. THE GRADE SHALL SLOPE AT LEAST 5% AWAY AND WITHIN 10 FEET OF FOUNDATION, EXCEPT @ PAVEMENT. (SEE ACCESSIBLE NOTES BELOW)

SYMBOL LEGEND

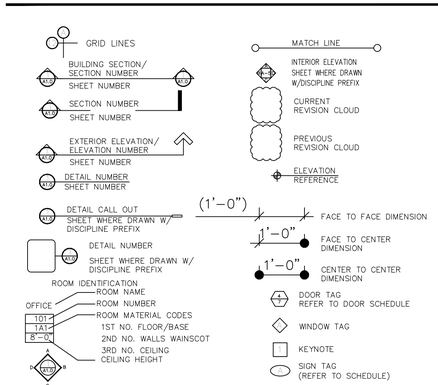

PROJECT TEAM

OWNER:

NAME: DIOCESE OF MONTEREY
ADDRESS: 425 CHURCH ST P.O. BOX 2048
MONTEREY, CA, 93942-2048
PHONE: (831) 373-4346

ARCHITECT:

NAME: SAVADOR MUNOZ
ADDRESS: 320 CAPITOL ST.
SALINAS, CA, 93901
PHONE: 831-320-0498
EMAIL: munfris@hotmail.com
EMAIL: salvador.munoz@smunozarchitects.com
WEBPAGE: www.smunozarchitects.com

SURVEYOR:

NAME: H.D PETERS CO INC
ADDRESS: 119 CENTRAL AVE
SALINAS, CA, 93901
PHONE: (831) 424-3961

STRUCTURAL ENGINEER:

NAME: CENTRAL COAST ENGINEERS, INC
ADDRESS: P.O. BOX 2503
CITY, STATE, ZIP: SALINAS, CA 93901
PHONE: (831) 757-5554

MECHANICAL ENGINEER

NAME: JAIME ZALDIVAR
ADDRESS: 99 PACIFIC ST STE 375G
CITY, STATE, ZIP: MONTEREY, CA 93940
PHONE: (831)641-7739

ELECTRICAL ENGINEER:

NAME: AURUM CONSULTING ENGI
ADDRESS: 60 GARDER CT. SUITE 210
CITY, STATE, ZIP: MONTEREY, CA 93940
PHONE: (831) 646-3330

PROJECT DATA:

ADDRESS: 100 SALINAS ROAD, (PAJARO) WATSONVILLE, CA 95076

APN:	117-323-011-000
	117-323-012-000
ZONING:	"LG" LIGHT COMERCIAL
LOT SIZE:	72,309 S.F. (1.659 AC)
(E) OCC. GROUP:	A-3 SOCIAL/RELIGIOUS
ALLOWABLE BUILDING HEIGHT:	35' RV LC (ZONING)
ALLOWABLE SITE COVERGAE:	50% OF THE SITE AREA
(E) LANDSCAPE AREA (MIN. 10%):	14,915 S.F.
PROPOSED SITE COVERAGE:	17,685.00 SF OR (24.1% OF THE SITE AREA)
(E) AREA OF BUILDING "A":	7,305.00 SF
(N) REMODELED AREA OF BUILDING "B":	531.00 + 6,620.00 SF = 7,151.00
(E) AREA OF BUILDING "C":	3,229.00 SF
CONSTRUCTION TYPE:	V-B SPRINKLERS
SEISMIC ZONE:	IV
GAS TYPE:	NATURAL GAS
SEWER SYSTEM:	MUNICIPAL
POTABLE WATER:	MUNICIPAL

CONSTRUCTION NOTES

ALL CONSTRUCTION SHALL CONFORM WITH FOLLOWING,
2016 CALIFORNIA BUILDING CODE
2016 CALIFORNIA RESIDENTIAL CODE
2016 CALIFORNIA ELECTRICAL CODE
2016 CALIFORNIA ENERGY CODE
2016 CALIFORNIA MECHANICAL CODE
2016 CALIFORNIA PLUMBING CODE
2016 CALIFORNIA FIRE CODE
2016 CALIFORNIA ENERGY EFFICIENCY STANDARDS
2016 CALIFORNIA TITLE 24 ENERGY REQUIREMENTS W LOCAL STANDARDS

MATERIALS

- STEEL CROSS SECTION
- LANDSCAPE
- AC PAVEMENT
- VENEER
- SPANISH TILE
- EARTH
- ROCK FILL
- SAND/ MORTAR/ PLASTER
- CONCRETE (CAST-IN-PLACE OR PRECAST)
- CONCRETE BLOCK (CMU)
- BRICK
- COARSE FILL
- SAND GROUT
- WOOD FRAMING CONTINUOUS
- WOOD BLOCKING
- WOOD FINISH
- PLYWOOD
- INSULATION, BAT.
- INSULATION, RIG.
- GYPSUM BOARD
- LATH AND BLASTER
- CERAMIC TILE
- ACOUSTIC TILE / BOARD

DEFERRED PERMIT SUBMITTALS

- SPRINKLER SYSTEMS
- FIRE ALARM SYSTEM
- LANDSCAPE & IRRIGATION SYSTEM
- SOLAR PANELS
- METAL STAIRS

SCHINDLER 3300 MRL TRACTION ELEVATOR

- INSTALL PER MANUFACTURES REQUIREMENTS AND 2016 ADA REQUIREMENTS SECTIONS 11B-407

SCOPE OF WORK

REMODEL OF THE EXISTING COMMUNITY HALL W/A SECOND FLOOR ADDITION AND HVAC TO (E) BLDG "A".

W.U.I NOTES

PRIOR TO BUILDING PERMIT FINAL APPROVAL, THE PROPERTY SHALL BE IN COMPLIANCE WITH THE VEGETATION MANAGEMENT REQUIREMENTS PRESCRIBED IN CALIFORNIA FIRE CODE SECTION 4906, INCLUDING CALIFORNIA PUBLIC RESOURCES CODE 4291 OR CALIFORNIA GOVERNMENT CODE SECTION 51185 PER CRC R327.1.5.

APPLICABLE CODES

THIS PROJECT SHALL COMPLY WITH THE FOLLOWING CODES AS APPLICABLE:
2016 CALIFORNIA BUILDING CODE
2016 CALIFORNIA GREEN BUILDING CODE
2016 CALIFORNIA PLUMBING CODE
2016 CALIFORNIA MECHANICAL CODE
2016 CALIFORNIA ELECTRICAL CODE
2016 CALIFORNIA FIRE CODE
2016 CALIFORNIA ENERGY CODE
CURRENT LOCAL CITY OR COUNTY ORDINANCE.

EXISTING / PROPOSED AREA DATA

BUILDING "A" (CHURCH) NO WORK IN THIS BUILDING
A-3 OCCUPANCY: EXISTING AREA:
(E) SOCIAL/RELIGIOUS 7,305.00 SF

BUILDING "B" (PARISH HALL) FIRST FLOOR
OCCUPANCY: A-3 EXISTING AREA PROPOSED AREA:
(N) SOCIAL/RELIGIOUS 5,945.00 SF 531.00 SF

BUILDING "B" (OFFICES - LOUNGE) 2ND FLOOR
OCCUPANCY: B, A-3 PROPOSED AREA:
(N) SOCIAL/RELIGIOUS 6,620.00 SF

BUILDING "C" (RESIDENCE - RECTORY) NO WORK IN THIS BUILDING
OCCUPANCY: B EXISTING AREA:
(E) OFFICES 3,229.00 SF

PARKING:
BUILDING "A" CHURCH (NO WORK IN THIS BUILDING)
141 SEATS @ 1/4 = 110 STALL REQUIRED PROPOSED 114
PARKING PROVIDED SHARED LIBRARY PARKING SPACES: 26
TOTAL: 140 STALLS W/9 STALLS W/4 ADA ACCESSIBLE STALLS

SHEET INDEX

G1.0 GENERAL INFORMATION, VICINITY MAP AND COVER SHEET
G2.0 TOPOGRAPHIC SURVEY
G2.1 TOPO. & CONCEPTUAL PLOT PLAN
G3.0 CALIFORNIA GREEN BUILDING STANDARDS
G4.0 CALIFORNIA GREEN BUILDING STANDARDS
G5.0 CALIFORNIA GREEN BUILDING STANDARDS

ARCHITECTURAL

A 1.1 SITE PLAN
A 2.1 EXISTING FLOOR PLAN
A 2.2 DEMOLITION FLOOR PLAN
A 2.3 NEW LOWER FLOOR PLAN
A 2.4 NEW UPPER FLOOR PLAN
A 2.5 TOILET ACCESSORY SCHEDULE
A 3.1 REFLECTED CEILING LOWER FLOOR PLAN
A 3.2 REFLECTED CEILING UPPER FLOOR PLAN
A 4.1 ROOF PLAN
A 5.1 EXISTING EXTERIOR ELEVATIONS & DEMOLITION
A 5.2 NEW EXTERIOR ELEVATIONS
A 5.3 NEW EXTERIOR ELEVATIONS & DETAILS
A 6.1 BUILDING SECTIONS
A 6.1.1 BUILDING SECTIONS
A 6.2 BUILDING DETAILS
A 6.3 ACCESSIBILITY SIGNS & DETAILS
A 6.4 ACCESSIBILITY SIGNS & DETAILS
A 6.5 STAIRS DETAILS
A 6.6 STAIRS DETAILS
A 6.7 ELEVATOR SECTION & CHAIR LIFT DETAILS
A 7.1 INTERIOR ELEVATIONS
A 7.2 INTERIOR ELEVATIONS
A 7.3 INTERIOR ELEVATIONS & DETAILS
A 7.4 TYPICAL MOUNTING HEIGHTS & DETAILS
A 8.1 DOOR & WINDOW SCHEDULE
A 8.2 DOOR & WINDOW SCHEDULE
A 9.1 DOOR DETAILS
A 9.2 WINDOW DETAILS
A 9.3 WALL CONDITIONS
A 9.4 CURB DETAILS
A 9.5 TYPICAL CEILING DETAILS
A 10.1 ROOF DETAILS
A 10.2 ROOF DETAILS
A 10.3 ROOF DETAILS

STRUCTURAL

S0.0 STRUCTURAL NOTES
S0.1 STRUCTURAL NOTES
S1.1 TYPICAL DETAILS
S1.2 TYPICAL DETAILS
S2.0 BUILDING SECTION
S2.1 FOUNDATION PLAN
S2.2 SECOND FLOOR FRAMING PLAN
S2.3 ROOF FRAMING PLAN
S3.1 STRUCTURAL DETAILS
S3.2 STRUCTURAL DETAILS
S3.3 STRUCTURAL DETAILS
S4.1 ELEVATOR DETAILS

MECHANICAL

M0.1 TITLE SHEET-MECHANICAL
M1.1 LOWER FLOOR PLAN-DEMO MECHANICAL
M2.1 LOWER FLOOR PLAN-NEW MECHANICAL
M2.2 UPPER FLOOR PLAN-NEW MECHANICAL
P0.1 TITLE SHEET-PLUMBING
P1.1 LOWER FLOOR PLAN-DEMO PLUMBING
P2.1 LOWER FLOOR PLAN-NEW PLUMBING
P2.2 UPPER FLOOR PLAN-NEW PLUMBING
T24.1 TITLE 24 COMPLIANCE FORMS
T24.2 TITLE 24 COMPLIANCE FORMS

ELECTRICAL

E0.1 ELECTRICAL COVER SHEET
E0.2 CALIFORNIA ENERGY COMPLIANCE TITLE 24 (BUILDING INTERIOR).
E0.3 CALIFORNIA ENERGY COMPLIANCE TITLE 24 (BUILDING EXTERIOR).
E1.1 ELECTRICAL PANEL BOARD SCHEDULES & SINGLE LINE DIAGRAM
E2.1 ELECTRICAL SITE PLAN.
E3.1 ELECTRICAL DEMOLITION PLAN & GENERAL DEMOLITION NOTES.
E4.1 POWER & SYSTEMS PLAN – LOWER LEVEL.
E4.2 POWER & SYSTEMS PLAN – UPPER LEVEL.
E5.1 LIGHTING PLAN – LOWER LEVEL.
E5.2 LIGHTING PLAN – UPPER LEVEL.
E6.1 ELECTRICAL DETAILS.
E6.2 ELECTRICAL DETAILS.
E6.3 ELECTRICAL SPECIFICATIONS.
E6.4 ELECTRICAL SPECIFICATIONS.

MUNOZ and ASSOCIATES ARCHITECTS
230 Capitol Street
Salinas, Ca. 93901
salvador.munoz@smunozarchitects.com
www.smunozarchitects.com
(831)320-0498

COPYRIGHT NOTICE

REGISTERED PROFESSIONAL ARCHITECT
SALVADOR F. MUNOZ
CA.18898
EXP. 11-30-2025
STATE OF CALIFORNIA

JOB NUMBER
002-2018

REV	DATE	DESCRIPTION
1	06-01-21	REVISION
2	09-23-2021	REVISION
3	02-28-2022	REVISION
4	09-20-2022	REVISION
5	01-27-2023	REVISION
6	12-4-2024	FLOODPROOF REVISION

APN
117-323-011-000

OUR LADY OF ASSUMPTION CHURCH

100 SALINAS ROAD
(PAJARO) WATSONVILLE, CA 95076

SHEET TITLE
GENERAL NOTES & VICINITY MAP

SHEET NUMBER
G 1.0

DATE: 12-4-2024

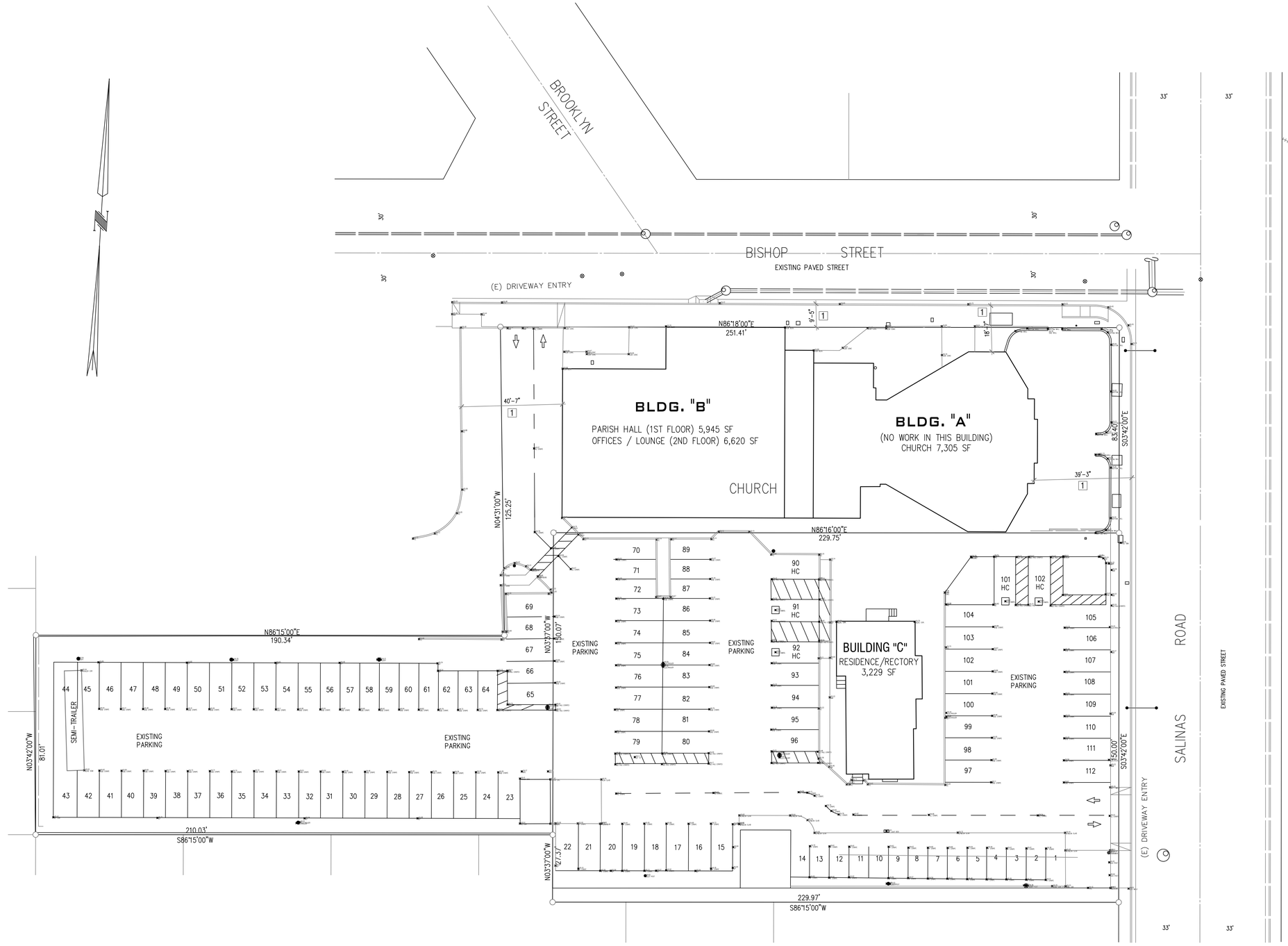

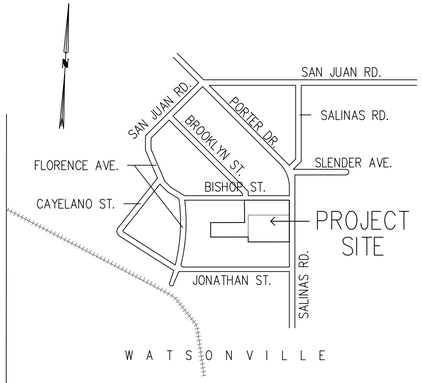

VICINITY MAP

NOT TO SCALE

A.P.N. 117-323-011 & 117-323-012

H. D. PETERS CO.

ENGINEERING – SURVEYING – LAND PLANNING

119 CENTRAL AVENUE – POST OFFICE BOX 582 SALINAS, CALIFORNIA 93902 (831) 424-3961 FAX (831) 424-2746

AS BUILT PARKING LAYOUT

PREPARED FOR

THE DIOCESE OF MONTEREY PARISH AND SCHOOL

100 SALINAS ROAD, PAJARO, CA. 95076

SCALE 1"=20' DRAWN STAFF JOB NO. 3796

DATE 03/2019 DESIGNED

FILE NO. 3796TOPO

MUNOZ and ASSOCIATES ARCHITECTS
239 Capitol Street
Salinas, Ca. 93901
e-mail: info@munozarchitects.com
www.zmunozarchitects.com
(831)320-5498

COPYRIGHT NOTICE

REGISTERED PROFESSIONAL ARCHITECT
SALVADOR F. MUNOZ
CA.18898
EXP. 11-30-2025
STATE OF CALIFORNIA

JOB NUMBER

002-2018

REV	DATE	DESCRIPTION
1	06-01-21	REVISION
2	09-23-2021	REVISION
4	03-30-2022	REVISION
8	12-4-2024	FLOODPROOF REVISION

APN

117-323-011-000

OUR LADY OF ASSUMPTION CHURCH

100 SALINAS ROAD

(PAJARO) WATSONVILLE, CA 95076

SHEET TITLE

TOPOGRAPHIC SURVEY

SHEET NUMBER

G 2.0

DATE: 12-4-2024

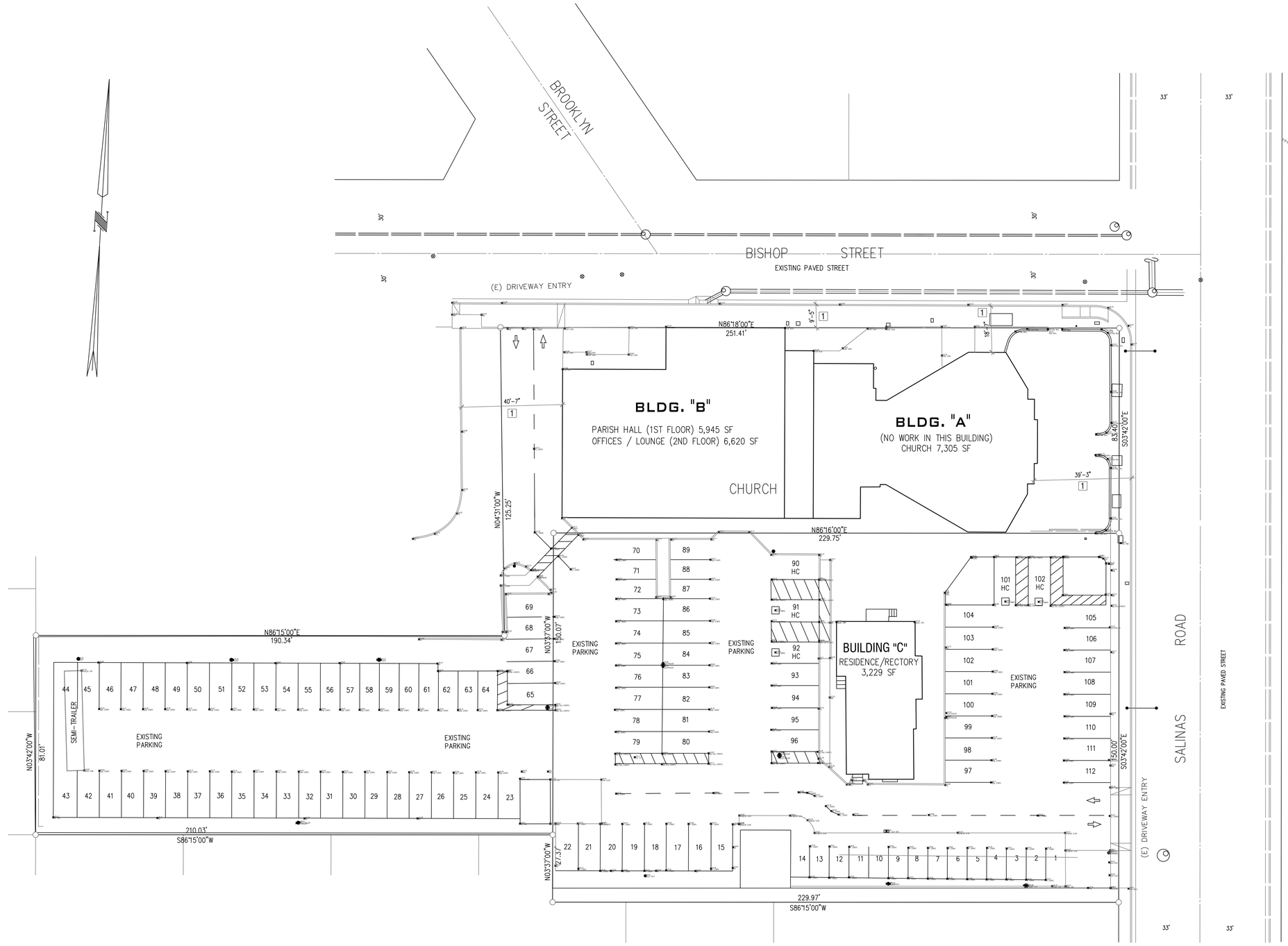

1 CONCEPTUAL PLOT PLAN

NOTE: ALL IS EXISTING UNLESS OTHERWISE NOTED

A.P.N. 117-323-011 & 117-323-012

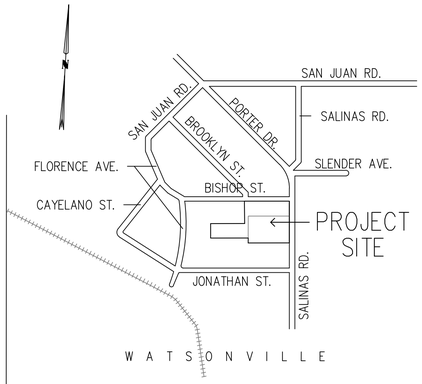

VICINITY MAP

NOT TO SCALE

CONSTRUCTION NOTES

1. PARCEL SIZE:

117-323-011-000 = 34,412 SF
117-323-012-000 = 37,897 SF

2. HEIGHT PROPOSED 34' MAX.

3. ALL SETBACKS TO REMAIN.

4. USE OF BUILDINGS:

BLDG A) CHURCH
OCC. A-3
(E) SOCIAL/RELIGIOUS
BLDG B) PARISH HALL
OCC. A-3
(E) SOCIAL/RELIGIOUS
BLDG C) RESIDENCE/RECTORY
OCC. B
(E) OFFICES

5. NO EXISTING AND/OR PROPOSED WELLS AND SEPTIC SYSTEMS.

6. NO TREE REMOVALS.

7. GRADING NONE

LEGEND

1 SETBACKS

2 SITE PHOTOS. N.T.S.

MUNOZ and ASSOCIATES ARCHITECTS
239 Capitol Street
Salinas, Ca. 93901
salvador@munozarchitects.com
www.smunozarchitects.com
(831)920-5498

COPYRIGHT NOTICE

REGISTERED PROFESSIONAL ARCHITECT SALVADOR F. MUNOZ CA.18898 EXP. 11-30-2025 STATE OF CALIFORNIA

JOB NUMBER
002-2018

REV	DATE	DESCRIPTION
1	06-01-21	REVISION
2	09-23-2021	REVISION
4	03-30-2022	REVISION
8	12-4-2024	FLOODPROOF REVISION

APN
117-323-011-000

OUR LADY OF ASSUMPTION CHURCH
100 SALINAS ROAD
(PAJARO) WATSONVILLE, CA 95076

SHEET TITLE
TOPO & CONCEPTUAL PLOT PLAN

SHEET NUMBER
G 2.1

DATE:12-4-2024

H. D. PETERS CO.
ENGINEERING – SURVEYING – LAND PLANNING
119 CENTRAL AVENUE – POST OFFICE BOX 582 SALINAS, CALIFORNIA 93902 (831) 424-3961 FAX (831) 424-2746

AS BUILT PARKING LAYOUT
PREPARED FOR
THE DIOCESE OF MONTEREY PARISH AND SCHOOL
100 SALINAS ROAD, PAJARO, CA. 95076

SCALE 1"=20' DRAWN STAFF JOB NO. 3796
DATE 03/2019 DESIGNED
FILE NO. 3796TOPO

2016 CALIFORNIA GREEN BUILDING STANDARDS CODE

NONRESIDENTIAL MANDATORY MEASURES, SHEET 1 (INCLUDING JULY 1, 2018, INTERVENING SUPPLEMENT)

Y = YES
N/A = NOT APPLICABLE
RESPON. PARTY = RESPONSIBLE PARTY (ie: ARCHITECT, ENGINEER, OWNER, CONTRACTOR, INSPECTOR ETC.)

Y | N/A | RESPON. PARTY

CHAPTER 3
GREEN BUILDING
SECTION 301 GENERAL

301.1 SCOPE. Buildings shall be designed to include the green building measures specified as mandatory in the application checklists contained in this code. Voluntary green building measures are also included in the application checklists and may be included in the design and construction of structures covered by this code, but are not required unless adopted by a city, county, or city and county as specified in Section 101.7.

301.3 NONRESIDENTIAL ADDITIONS AND ALTERATIONS. [BSC] The provisions of individual sections of Chapter 5 apply to newly constructed buildings, building additions of 1,000 square feet or greater, and/or building alterations with a permit valuation of $200,000 or above (for occupancies within the authority of California Building Standards Commission). Code sections relevant to additions and alterations shall only apply to the portions of the building being added or altered within the scope of the permitted work.

A code section will be designated by a banner to indicate where the code section only applies to newly constructed building [N] or to additions and alterations [A]. When the code section applies to both, no banner will be used.

301.3.1 Nonresidential additions and alterations that cause updates to plumbing fixtures only:

Note: On and after January 1, 2014, certain commercial real property, as defined in Civil Code Section 1101.3, shall have its noncompliant plumbing fixtures replaced with appropriate water-conserving plumbing fixtures under specific circumstances. See Civil Code Section 1101.1 *et seq.* for definitions, types of commercial real property affected, effective dates, circumstances necessitating replacement of noncompliant plumbing fixtures, and duties and responsibilities for ensuring compliance.

301.3.2 Waste Diversion. The requirements of Section 5.408 shall be required for additions and alterations whenever a permit is required for work.

301.4 PUBLIC SCHOOLS AND COMMUNITY COLLEGES. (see GBSC)
301.5 HEALTH FACILITIES. (see GBSC)

SECTION 302 MIXED OCCUPANCY BUILDINGS

302.1 MIXED OCCUPANCY BUILDINGS. In mixed occupancy buildings, each portion of a building shall comply with the specific green building measures applicable to each specific occupancy.

SECTION 303 PHASED PROJECTS

303.1 Phased projects. For shell buildings and others constructed for future tenant improvements, only those code measures relevant to the building components and systems considered to be new construction (or newly constructed) shall apply.

303.1.1 Tenant improvements. The provisions of this code shall apply only to the initial tenant or occupant improvements to a project. Subsequent tenant improvements shall comply with the scoping provisions in Section 301.3 non-residential additions and alterations.

ABBREVIATION DEFINITIONS:

HCD	Department of Housing and Community Development
BSC	California Building Standards Commission
DSA-SS	Division of the State Architect, Structural Safety
OSHPD	Office of Statewide Health Planning and Development
LR	Low Rise
HR	High Rise
AA	Additions and Alterations
N	New

CHAPTER 5
NONRESIDENTIAL MANDATORY MEASURES

DIVISION 5.1 PLANNING AND DESIGN

SECTION 5.101 GENERAL
5.101.1 Scope
The provisions of this chapter outline planning, design and development methods that include environmentally responsible site selection, building design, building siting and development to protect, restore and enhance the environmental quality of the site and respect the integrity of adjacent properties.

SECTION 5.102 DEFINITIONS
5.102.1 DEFINITIONS
The following terms are defined in Chapter 2 *(and are included here for reference)*

CUTOFF LUMINAIRES. Luminaires whose light distribution is such that the candela per 1000 lamp lumens does not numerically exceed 25 (2.5 percent) at an angle of 90 degrees above nadir, and 100 (10 percent) at a vertical angle of 80 degrees above nadir. This applies to all lateral angles around the luminaire.

LOW-EMITTING AND FUEL EFFICIENT VEHICLES.
Eligible vehicles are limited to the following:

1. Zero emission vehicle (ZEV), including neighborhood electric vehicles (NEV), partial zero emission vehicle (PZEV), advanced technology PZEV (AT ZEV) or CNG fueled (original equipment manufacturer only) regulated under Health and Safety Code section 43800 and CCR, Title 13, Sections 1961 and 1962.
2. High-efficiency vehicles, regulated by U.S. EPA, bearing High-Occupancy Vehicle (HOV) car pool lane stickers issued by the Department of Motor Vehicles.

NEIGHBORHOOD ELECTRIC VEHICLE (NEV). A motor vehicle that meets the definition of "low-speed vehicle" either in Section 385.5 of the Vehicle Code or in 49CFR571.500 (as it existed on July 1, 2000), and is certified to zero-emission vehicle standards.

TENANT-OCCUPANTS. Building occupants who inhabit a building during its normal hours of operation as permanent occupants, such as employees, as distinguished from customers and other transient visitors.

VANPOOL VEHICLE. Eligible vehicles are limited to any motor vehicle, other than a motortruck or truck tractor, designed for carrying more than 10 but not more than 15 persons including the driver, which is maintained and used primarily for the nonprofit work-related transportation of adults for the purpose of ridesharing.

Note: Source: Vehicle Code, Division 1, Section 668

ZEV. Any vehicle certified to zero-emission standards.

SECTION 5.106 SITE DEVELOPMENT
5.106.1 STORM WATER POLLUTION PREVENTION FOR PROJECTS THAT DISTURB LESS THAN ONE ACRE OF LAND. Newly constructed projects and additions which disturb less than one acre of land, and are not part of a larger common plan of development or sale, shall prevent the pollution of storm water runoff from the construction activities through one or more of the following measures:

5.106.1.1 Local ordinance. Comply with a lawfully enacted storm water management and/or erosion control ordinance.

5.106.1.2 Best Management Practices (BMPs). Prevent the loss of soil through wind or water erosion by implementing an effective combination of erosion and sediment control and good housekeeping BMPs.

1. Soil loss BMPs that should be considered for implementation as appropriate for each project include, but are not limited to, the following:
   a. Scheduling construction activity during dry weather, when possible.
   b. Preservation of natural features, vegetation, soil, and buffers around surface waters.
   c. Drainage swales or lined ditches to control stormwater flow.
   d. Mulching or hydroseeding to stabilize disturbed soils, and buffers around surface waters.
   e. Erosion control to protect slopes.
   f. Protection of storm drain inlets (gravel bags or catch basin inserts).
   g. Perimeter sediment control (perimeter silt fence, fiber rolls).
   h. Sediment trap or sediment basin to retain sediment on site.
   i. Stabilized construction exits.
   j. Wind erosion control.
   k. Other soil loss BMPs acceptable to the enforcing agency.
2. Good housekeeping BMPs to manage construction equipment, materials, non-stormwater discharges and wastes that should be considered for implementation as appropriate for each project include, but are not limited to, the following:
   a. Dewatering activities.
   b. Material handling and waste management.
   c. Building materials stockpile management.
   d. Management of washout areas (concrete, paints, stucco, etc.).
   e. Control of vehicle/equipment fueling to contractor's staging area.
   f. Vehicle and equipment cleaning performed off site.
   g Spill prevention and control.
   h. Other housekeeping BMPs acceptable to the enforcing agency.

Y | N/A | RESPON. PARTY

5.106.2 STORMWATER POLLUTION PREVENTION FOR PROJECTS THAT DISTURB ONE OR MORE ACRES OF LAND. Comply with all lawfully enacted stormwater discharge regulations for projects that (1) disturb one acre or more of land, or (2) disturb less than one acre of land but are part of a larger common plan or development sale.

Note: Projects that (1) disturb one acre or ore of land, or (2) disturb less than one acre of land but are part of the larger common plan of development or sale must comply with the post-construction requirements detailed in the applicable National Pollutant Discharge Elimination System (NPDES) General permit for Stormwater Discharges Associated with Construction and Land Disturbance Activities issued by the State Water Resources Control Board or the Lahontan Regional Water Quality Control Board (for projects in the Lake Tahoe Hydrologic Unit).

The NPDES permits require postconstruction runoff (post-project hydrology) to match the preconstruction runoff (pre-project hydrology) with the installation of preconstruction stormwater management measures. The NPDES permits emphasize runoff reduction through on-site stormwater use, interception, evapotranspiration, and infiltration through nonstructural controls, such as Low Impact Development (LID) practices, and conversation design measures. Stormwater volume that cannot be addressed using nonstructural practices is required to be captured in structural practices and be approved by the enforcing agency.

Refer to the current applicable permits on the State Water Resources Control Board website at: www.waterboards.ca.gov/constructionstormwater. Consideration to the stormwater runoff management measures should be given during the initial design process for appropriate integration into site development.

5.106.4 BICYCLE PARKING. For buildings within the authority of California Building Standards Commission as specified in Section 103, comply with Section 5.106.4.1. For buildings within the authority of the Division of the State Architect pursuant to Section 105, comply with Section 5.106.4.2

5.106.4.1 Bicycle parking. [BSC-CG] Comply with Sections 5.106.4.1.1 and 5.106.4.1.2; or meet the applicable local ordinance, whichever is stricter.

5.106.4.1.1 Short-term bicycle parking. If the project or an addition or alteration is anticipated to generate visitor traffic, provide permanently anchored bicycle racks within 200 feet of the visitors' entrance, readily visible to passers-by, for 5% of new visitor motorized vehicle parking spaces being added, with a minimum of one two-bike capacity rack.
Exception: Additions or alterations which add nine or less visitor vehicular parking spaces.

5.106.4.1.2 Long-term bicycle parking. For new buildings with tenant spaces that have 10 or more tenant-occupants, provide secure bicycle parking for 5 percent of the tenant-occupant vehicular parking spaces with a minimum of one bicycle parking facility.

5.106.4.1.3 For additions or alterations that add 10 or more tenant-occupant vehicular parking spaces, provide secure bicycle parking for 5 percent of the tenant vehicular parking spaces being added, with a minimum of one bicycle parking facility.

5.106.4.1.4 For new shall buildings in phased projects provide secure bicycle parking for 5 percent of the anticipated tenant-occupant vehicular parking spaces with a minimum of one bicycle parking facility.

5.106.4.1.5 Acceptable bicycle parking facility for Sections 5.106.4.1.2, 5.106.4.1.3, and 5.106.4.1.4 shall be convenient from the street and shall meet one of the following:

1. Covered, lockable enclosures with permanently anchored racks for bicycles;
2. Lockable bicycle rooms with permanently anchored racks; or
3. Lockable, permanently anchored bicycle lockers.

Note: Additional information on recommended bicycle accommodations may be obtained from Sacramento Area Bicycle Advocates.

5.106.4.2 Bicycle parking. [DSA-SS] For public schools and community colleges, comply with Sections 5.106.4.2.1 and 5.106.4.2.2

5.106.4.2.1 Student bicycle parking. Provide permanently anchored bicycle racks conveniently accessed with a minimum of four two-bike capacity racks per new building.
5.106.4.2.2 Staff bicycle parking. Provide permanent, secure bicycle parking conveniently accessed with a minimum of two staff bicycle parking spaces per new building. Acceptable bicycle parking facilities shall be convenient from the street or staff parking area and shall meet one of the following:

1. Covered, lockable enclosures with permanently anchored racks for bicycles;
2. Lockable bicycle rooms with permanently anchored racks; or
3. Lockable, permanently anchored bicycle lockers.

5.106.5.2 DESIGNATED PARKING FOR CLEAN AIR VEHICLES. In new projects or additions or alterations that add 10 or more vehicular parking spaces, provide designated parking for any combination of low-emitting, fuel-efficient and carpool/van pool vehicles as follows:

TABLE 5.106.5.2 - PARKING

TOTAL NUMBER OF PARKING SPACES	NUMBER OF REQUIRED SPACES
0-9	0
10-25	1
25-50	3
51-75	6
76-100	8
101-150	11
151-200	16
201 AND OVER	AT LEAST 8% OF TOTAL

5.106.5.2.1 - Parking stall marking. Paint, in the paint used for stall striping, the following characters such that the lower edge of the last word aligns with the end of the stall striping and is visible beneath a parked vehicle: CLEAN AIR / VAN POOL / EV

Note: Vehicles bearing Clean Air Vehicle stickers from expired HOV lane programs may be considered eligible for designated parking spaces.

5.106.5.3 Electric vehicle (EV) charging. [N] Construction shall comply with Section 5.106.5.3.1 or Section 5.106.5.3.2 to facilitate future installation of electric vehicle supply equipment (EVSE). When EVSE(s) is/are installed, it shall be in accordance with the *California Building Code,* the California Energy Commission (CEC) and as follows:

5.106.5.3.1 Single charging space requirements. [N] When only a single charging space is required per Table 5.106.5.3.3, a raceway is required to be installed at the time of construction and shall be installed in accordance with the *California Electrical Code.* Construction plans and specifications shall include, but are not limited to, the following:

1. The type and location of the EVSE.
2. A listed raceway capable of accommodating a 208/240 -volt dedicated branch circuit.
3. The raceway shall not be less than trade size 1."
4. The raceway shall originate at a service panel or a subpanel serving the area, and shall terminate in close proximity to the proposed location of the charging equipment and listed suitable cabinet, box, enclosure or equivalent.
5. The service panel or subpanel shall have sufficient capacity to accommodate a minimum 40-ampere dedicated branch circuit for the future installation of the EVSE.

5.106.5.3.2 Multiple charging space requirements. [N] When multiple charging spaces are required per Table 5.106.5.3.3 raceway(s) is/are required to be installed at the time of construction and shall be installed in accordance with the *California Electrical Code.* Construction plans and specifications shall include, but are not limited to, the following:

1. The type and location of the EVSE.
2. The raceway(s) shall originate at a service panel or a subpanel(s) serving the area, and shall terminate in close proximity to the proposed location of the charging equipment and into listed suitable cabinet(s), box(es), enclosure(s) or equivalent.
3. Plan design shall be based upon 40-ampere minimum branch circuits.
4. Electrical calculations shall substantiate the design of the electrical system, to include the rating of equipment and any on-site distribution transformers and have sufficient capacity to simultaneously charge all required EVs at its full rated amperage.
5. The service panel or subpanel(s) shall have sufficient capacity to accommodate the required number of dedicated branch circuit(s) for the future installation of the EVSE.

5.106.5.3.3 EV charging space calculations. [N] Table 5.106.5.3.3 shall be used to determine if single or multiple charging space requirements apply for the future installation of EVSE.

Y | N/A | RESPON. PARTY

Exceptions: On a case-by-case basis where the local enforcing agency has determined EV charging and infrastructure is not feasible based upon one or more of the following conditions:

1. Where there is insufficient electrical supply.
2. Where there is evidence suitable to the local enforcing agency substantiating that additional local utility infrastructure design requirements, directly related to the implementation of Section 5.106.5.3, may adversely impact the construction cost of the project.

TABLE 5.106.5.3.3

TOTAL NUMBER OF PARKING SPACES	NUMBER OF REQUIRED SPACES
0-9	0
10-25	1
36-50	2
51-75	4
76-100	5
101-200	7
201 AND OVER	6% of total[1]

1. Calculation for spaces shall be rounded up to the nearest whole number.

5.106.5.3.4 [N] Identification. The service panel or subpanel(s) circuit directory shall identify the reserved overcurrent protective device space(s) for future EV charging as "EV CAPABLE". The raceway termination location shall be permanently and visibly marked as "EV CAPABLE".

5.106.5.3.5 [N] Future charging spaces qualify as designated parking as described in Section 5.106.5.2 Designated parking for clean air vehicles.
Notes:

1. The California Department of Transportation adopts and publishes the California Manual on Uniform Traffic Control Devices (California MUTCD) to provide uniform standards and specifications for all official traffic control devices in California. Zero Emission Vehicle Signs and Pavement Markings can be found in the New Policies & Directives number 13-01. www.dot.ca.gov/hq/traffops/policy/13-01.pdf.
2. See Vehicle Code Section 22511 for EV charging spaces signage in off-street parking facilities and for use of EV charging spaces.
3. The Governor's Office of Planning and Research published a Zero-Emission Vehicle Community Readiness Guidebook which provides helpful information for local governments, residents and businesses. www.opr.ca.gov/docs/ZEV_Guidebook.pdf.

5.106.8 LIGHT POLLUTION REDUCTION. [N] [BSC-CG] Outdoor lighting systems shall be designed and installed to comply with the following:

1. The minimum requirements in the California Energy Code for Lighting Zones 0-4 as defined in Chapter 10, Section 10-114 of the California Administrative Code; and
2. Backlight (B) ratings as defined in IES TM-15-11 (shown in Table A-1 in Chapter 8);
3. Uplight and Glare ratings as defined in California Energy Code (shown in Tables 130.2-1 and 130.2-B in Chapter 8) and
4. Allowable BUG ratings not exceeding those shown in Table 5.106.8, [N] or Comply with a local ordinance lawfully enacted pursuant to Section 101.7, whichever is more stringent.

Exceptions: [N]

1. Luminaires that qualify as exceptions in Section 140.7 of the California Energy Code.
2. Emergency lighting.
3. Building facade meeting the requirements in Table 140.7-B of the California Energy Code, Part 6.
4. Custom lighting features as allowed by the local enforcing agency, as permitted by Section 101.8 Alternate materials, designs and methods of construction.

Note: [N] See also California Building Code, Chapter 12, Section 1205.6 for college campus lighting requirements for parking facilities and walkways.

5.106.10 GRADING AND PAVING. Construction plans shall indicate how site grading or a drainage system will manage all surface water flows to keep water from entering buildings. Examples of methods to manage surface water include, but are not limited to, the following:

1. Swales.
2. Water collection and disposal systems.
3. French drains.
4. Water retention gardens.
5. Other water measures which keep surface water away from buildings and aid in groundwater recharge.

Exception: Additions and alterations not altering the drainage path.

TABLE 5.106.8 [N] MAXIMUM ALLOWABLE BACKLIGHT, UPLIGHT AND GLARE (BUG) RATINGS [1,2]

ALLOWABLE RATING	LIGHTING ZONE LZ0	LIGHTING ZONE LZ1	LIGHTING ZONE LZ2	LIGHTING ZONE LZ3	LIGHTING ZONE LZ4
MAXIMUM ALLOWABLE BACKLIGHT RATING [3]					
Luminaire greater than 2 mounting heights (MH) from property line	N/A	No Limit	No Limit	No Limit	No Limit
Luminaire back hemisphere is 1-2 MH from property line	N/A	B2	B3	B4	B4
Luminaire back hemisphere is 0.5-1 MH from property line	N/A	B1	B2	B3	B3
Luminaire back hemisphere is less than 0.5 MH from property line	N/A	B0	B0	B1	B2
MAXIMUM ALLOWABLE UPLIGHT RATING (U)					
For area lighting [4]	N/A	U0	U0	U0	U0
For all other outdoor lighting,including decorative luminaires	N/A	U1	U2	U3	UR
MAXIMUM ALLOWABLE GLARE RATING [5] (G)					
Luminaire greater than 2 MH from property line	N/A	G1	G2	G3	G4
Luminaire front hemisphere is 1-2 MH from property line	N/A	G0	G1	G1	G2
Luminaire front hemisphere is 0.5-1 MH from property line	N/A	G0	G0	G1	G1
Luminaire back hemisphere is less than 0.5 MH from property line	N/A	G0	G0	G0	G1

1. IESNA Lighting Zones 0 and 5 are not applicable; refer to Lighting Zones as defined in the *California Energy Code* and Chapter 10 of the *California Administrative Code.*

2. For property lines that abut public walkways, bikeways, plazas and parking lots, the property line may be considered to be 5 feet beyond the actual property line for purpose of determining compliance with this section. For property lines that abut public roadways and public transit corridors, the property line may be considered to be the centerline of the public roadway or public transit corridor for the purpose of determining compliance with this section.

3. If the nearest property line is less than or equal to two mounting heights from the back hemisphere of the luminaire distribution, the applicable reduced Backlight rating shall be met.

4. General lighting luminaires in areas such as outdoor parking, sales or storage lots shall meet these reduced ratings. Decorative luminaires located in these areas shall meet *U*-value limits for "all other outdoor lighting".

5. If the nearest property line is less than or equal to two mounting heights from the front hemisphere of the luminaire distribution, the applicable reduced Glare rating shall be met.

Y | N/A | RESPON. PARTY

DIVISION 5.2 ENERGY EFFICIENCY

SECTION 5.201 GENERAL
5.201.1 Scope [BSC-CG]. *California Energy Code [DSA-SS]*. For the purposes of mandatory energy efficiency standards in this code, the California Energy Commission will continue to adopt mandatory building standards.

DIVISION 5.3 WATER EFFICIENCY AND CONSERVATION

SECTION 5.301 GENERAL
5.301.1 Scope. The provisions of this chapter shall establish the means of conserving water use indoors, outdoors and in wastewater conveyance.

SECTION 5.302 DEFINITIONS
5.302.1 Definitions. The following terms are defined in Chapter 2 *(and are included here for reference)*

EVAPOTRANSPIRATION ADJUSTMENT FACTOR (ETAF) [DSA-SS]. An adjustment factor when applied to reference evapotranspiration that adjusts for plant factors and irrigation efficiency, which ae two major influences on the amount of water that needs to be applied to the landscape.

FOOTPRINT AREA [DSA-SS]. The total area of the furthest exterior wall of the structure projected to natural grade, not including exterior areas such as stairs, covered walkways, patios and decks.

METERING FAUCET. A self-closing faucet that dispenses a specific volume of water for each actuation cycle. The volume or cycle duration can be fixed or adjustable.

GRAYWATER. Pursuant to Health and Safety Code Section 17922.12, "graywater" means untreated wastewater that has not been contaminated by any toilet discharge, has not been affected by infectious, contaminated, or unhealthy bodily wastes, and does not present a threat from contamination by unhealthful processing, manufacturing, or operating wastes. "Graywater" includes, but is not limited to wastewater from bathtubs, showers, bathroom washbasins, clothes washing machines and laundry tubs, but does not include waste water from kitchen sinks or dishwashers.

MODEL WATER EFFICIENT LANDSCAPE ORDINANCE (MWELO). The California ordinance regulating landscape design, installation and maintenance practices that will ensure commercial, multifamily and other developer installed landscapes greater than 2500 square feet meet an irrigation water budget developed based on landscaped area and climatological parameters.

MODEL WATER EFFICIENT LANDSCAPE ORDINANCE (MWELO). [HCD] The California model ordinance (California Code of Regulations, Title 23, Division 2, Chapter 2.7), regulating landscape design, installation and maintenance practices. Local agencies are required to adopt the updated MWELO, or adopt a local ordinance at least as effective as the MWELO.

POTABLE WATER. Water that is drinkable and meets the U.S. Environmental Protection Agency (EPA) Drinking Water Standards. See definition in the California Plumbing Code, Part 5.

POTABLE WATER. [HCD] Water that is satisfactory for drinking, culinary, and domestic puroses, and meets the U.S. Environmental Protection Agency (EPA) Drinking Water Standards and the requirements of the Health Authority Having Jurisdiction.

RECYCLED WATER. Water which, as a result of treatment of waste, is suitable for a direct beneficial use or a controlled use that would not otherwise occur [Water Code Section 13050 (n)]. Simply put, recycled water is water treated to remove waste matter attaining a quality that is suitable to use the water again.

SUBMETER. A meter installed subordinate to a site meter. Usually used to measure water intended for one purpose, such as landscape irrigation. For the purposes of CALGreen, a dedicated meter may be considered a submeter.

WATER BUDGET. Is the estimated total landscape irrigation water use which shall not exceed the maximum applied water allowance calculated in accordance with the Department of Water Resources Model Efficient Landscape Ordinance (MWELO).

SECTION 5.303 INDOOR WATER USE
5.303.1 METERS. Separate submeters or metering devices shall be installed for the uses described in Sections 503.1.1 and 503.1.2.

5.303.1.1 Buildings in excess of 50,000 square feet. Separate submeters shall be installed as follows:

1. For each individual leased, rented or other tenant space within the building projected to consume more than 100 gal/day (380 L/day), including, but not limited to, spaces used for laundry or cleaners, restaurant or food service, medical or dental office, laboratory, or beauty salon or barber shop.
2. Where separate submeters for individual building tenants are unfeasible, for water supplied to the following subsystems:
   a. Makeup water for cooling towers where flow through is greater than 500 gpm (30 L/s).
   b. Makeup water for evaporative coolers greater than 6 gpm (0.04 L/s).
   c. Steam and hot water boilers with energy input more than 500,000 Btu/h (147 kW).

5.303.1.2 Excess consumption. A separate submeter or metering device shall be provided for any tenant within a new building or within an addition that is projected to consume more than 1,000 gal/day.

5.303.3 WATER CONSERVING PLUMBING FIXTURES AND FITTINGS. Plumbing fixtures (water closets and urinals) and fittings (faucets and showerheads) shall comply with the following:

5.303.3.1 Water Closets. The effective flush volume of all water closets shall not exceed 1.28 gallons per flush. Tank-type water closets shall be certified to the performance criteria of the U.S. EPA WaterSense Specification for Tank-Type toilets.

Note: The effective flush volume of dual flush toilets is defined as the composite, average flush volume of two reduced flushes and one full flush.

5.303.3.2 Urinals.
5.303.3.2.1 Wall-mounted Urinals. The effective flush volume of wall-mounted urinals shall not exceed 0.125 gallons per flush.

5.303.3.2.2 Floor-mounted Urinals. The effective flush volume of floor-mounted or other urinals shall not exceed 0.5 gallons per flush.

5.303.3.3 Showerheads. [BSC-CG]
5.303.3.3.1 Single showerhead. Showerheads shall have a maximum flow rate of not more than 1.8 gallons per minute at 80 psi. Showerheads shall be certified to the performance criteria of the U.S. EPA WaterSense Specification for Showerheads.

5.303.3.3.2 Multiple showerheads serving one shower. When a shower is served by more than one showerhead, the combined flow rate of all the showerheads and/or other shower outlets controlled by a single valve shall not exceed 1.8 gallons per minute at 80 psi, or the shower shall be designed to allow only one shower outlet to be in operation at a time.
Note: A hand-held shower shall be considered a showerhead.

5.303.3.3.3 Showerheads. [DSA-SS]
5.303.3.3.3.1 Single showerhead. Showerheads shall have a maximum flow rate of not more than 2.0 gallons per minute at 80 psi. Showerheads shall be certified to the performance criteria of the U.S. EPA WaterSense Specification for Showerheads.

5.303.3.3.3.1 Multiple showerheads serving one shower. When a shower is served by more than one showerhead, the combination flow rate of all showerheads and/or other shower outlets controlled by a single valve shall not exceed 2.0 gallons per minute at 80 psi, or the shower shall be designed to allow only one shower outlet to be in operation at a time.

Note: A hand-held shower shall be considered a showerhead.

5.303.3.4 Faucets and fountains.

5.303.3.4.1 Nonresidential Lavatory faucets. Lavatory faucets shall have a maximum flow rate of not more than 0.5 gallons per minute at 60 psi.

5.303.3.4.2 Kitchen faucets. Kitchen faucets shall have a maximum flow rate of not more than 1.8 gallons per minute at 60 psi. Kitchen faucets may temporarily increase the flow above the maximum rate, but not to exceed 2.2 gallons per minute at 60 psi, and must default to a maximum flow rate of 1.8 gallons per minute at 60 psi.

5.303.3.4.3 Wash fountains. Wash fountains shall have a maximum flow rate of not more than1.8 gallons per minute/20 [rim space (inches) at 60 psi].

5.303.3.4.4 Metering faucets. Metering faucets shall not deliver more than 0.20 gallons per cycle.

5.303.3.4.5 Metering faucets for wash fountains. Metering faucets for wash fountains shall have a maximum flow rate of not more than 0.20 gallons per minute/20 [rim space (inches) at 60 psi].

Note: Where complying faucets are unavailable, aerators or other means may be used to achieve reduction.

MUNOZ and ASSOCIATES
ARCHITECTS
230 Capitol Street
Salinas, Ca. 93901
salvador.munoz@smunozarchitects.com
www.smunozarchitects.com
(831)320-0498

COPYRIGHT NOTICE

REGISTERED PROFESSIONAL ARCHITECT
SALVADOR F. MUNOZ
CA.18898
EXP. 11-30-2025
STATE OF CALIFORNIA

JOB NUMBER
002-2018

REV	DATE	DESCRIPTION
1	06-01-21	REVISION
2	12-4-2024	FLOODPROOF REVISION

APN
117-323-011-000

OUR LADY OF
ASSUMPTION CHURCH

100 SALINAS ROAD
(PAJARO) WATSONVILLE, CA 95076

SHEET TITLE
CALIFORNIA GREEN BUILDING STANDARDS

SHEET NUMBER
G 3.0

DATE: 12-4-2024

2016 CALIFORNIA GREEN BUILDING STANDARDS CODE

NONRESIDENTIAL MANDATORY MEASURES, SHEET 1 (INCLUDING JULY 1, 2018, INTERVENING SUPPLEMENT)

Y = YES
N/A = NOT APPLICABLE
RESPON. PARTY = RESPONSIBLE PARTY (ie: ARCHITECT, ENGINEER, OWNER, CONTRACTOR, INSPECTOR ETC.)

5.303.4 COMMERCIAL KITCHEN EQUIPMENT.

5.303.4.1 Food Waste Disposers. Disposers shall either modulate the use of water to no more than 1 gpm when the disposer is not in use (not actively grinding food waste/no-load) or shall automatically shut off after no more than 10 minutes of inactivity. Disposers shall use no more than 8 gpm of water.
Note: This code section does not affect local jurisdiction authority to prohibit or require disposer installation.

5.303.5 AREAS OF ADDITION OR ALTERATION. For those occupancies within the authority of the California Building Standards Commission as specified in Section 103, the provisions of Section 5.303.3 and 5.303.4 shall apply to new fixtures in additions or areas of alteration to the building.

5.303.6 STANDARDS FOR PLUMBING FIXTURES AND FITTINGS. Plumbing fixtures and fittings shall be installed in accordance with the *California Plumbing Code*, and shall meet the applicable standards referenced in Table 1701.1 of the *California Plumbing Code* and in Chapter 6 of this code.

SECTION 5.304 OUTDOOR WATER USE

5.304.1 SCOPE. The provisions of Section 5.304, Outdoor Water Use reference the mandatory Model Water Efficiency Landscape Ordinance (MWELO) contained within Chapter 2.7, Division 2, Title 23, California Code of Regulations.

5.304.2 OUTDOOR WATER USE IN LANDSCAPE AREAS EQUAL TO OR GREATER THAN 500 SQUARE FEET. When water is used for outdoor irrigation for new construction projects with an aggregate landscape area equal to or greater than 500 square feet requiring a building or landscape permit, plan check or design review, one of the following shall apply:

1. A local water efficient landscape ordinance that is, based on evidence in the record, at least as effective in conserving water as the updated model ordinance adopted by the Department of Water Resources (DWR) per Government Code Section 65595(c).
2. The California Department of Water Resources Model Water Efficient Landscape Ordinance (MWELO) commencing with Section 490 of Chapter 2.7, Division 2, Title 23, California Code of Regulations.

5.304.3 OUTDOOR WATER USE IN REHABILITATED LANDSCAPE PROJECTS EQUAL TO OR GREATER THAN 2,500 SQUARE FEET. Rehabilitated landscape project with an aggregate landscape area equal to or greater than 2,500 square feet requiring a building or landscape permit, plan check, or design review shall comply with Section 5.304.2, Item 1 or 2.

5.304.4 OUTDOOR WATER USE IN LANDSCAPE AREAS OF 2,500 SQUARE FEET OR LESS. Any project with an aggregate area of 2,500 square feet of less may comply with the performance requirements of MWELO or conform to the prescriptive compliance measures contained in MWELO's Appendix D.

5.304.5 GRAYWATER OR RAINWATER USE IN LANDSCAPE AREAS. For projects using treated or untreated graywater or rainwater captured on site, any lot or parcet within the project that has less than 2,500 square feet of landscape and meets the lot or parcel's landscape water requirement (Estimate Total Water Use) entirely with treated or untreated graywater or through stored rainwater captured on site is subject only to Appendix D Section (5).

Notes:
1. DWR's Model Water Efficient Landscape Ordinance, definitions and supporting documents are available at the following link: http://water.ca.gov/wateruseefficiency/landscapeordinance/
2. A water budget calculator is available at the following link: http://water.ca.gov/wateruseefficiency/landscapeordinance/
3. The MWELO prescriptive compliance measure Appendix D may be found at the following link: http://water.ca.gov/wateruseefficiency/landscapeordinance/
In addition, a copy of MWELO Appendix D may be found in Chapter 8 of this code.

5.304.6 OUTDOOR POTABLE WATER USE IN LANDSCAPE AREAS [DSA-SS]. For public schools and community colleges, landscape projects as described in Sections 5.304.6.1 and 5.304.6.2 shall comply with the California Department of Water Resoucres Model Water Efficient Landscape Ordinance (MWELO) commencing with Section 490 of Chapter 2.7, Division 2, Title 23, California Code of Regulations, except that the evapotranspiration adjustment factor (ETAF) shall be 0.65 with an additional water allowance for special landscape areas (SLA) of 0.35.

Exception: Any project with an aggregate landscape area of 2,500 square feet or less may comply with the prescriptive measures contained in Appendix D of MWELO.

5.304.6.1 Newly constructed landscapes. [DSA-SS] New construction projects with an aggregate landscape area equal to or greater than 500 square feet.

5.304.6.2 Rehabilitated landscapes. [DSA-SS] Rehabilitated landscape projects with an aggregate landscape area equal to or greater than 1,200 square feet.

5.304.3 IRRIGATION DESIGN. In new nonresidential construction with at least 1,000 but not more than 2,500 square feet of cumulative landscaped area (the level at which the MWELO applies), install irrigation controllers and sensors which include the following criteria, and meet manufacturer's recommendations.

5.304.3.1 Irrigation controllers. Automatic irrigation system controllers installed at the time of final inspection shall comply with the following:

1. Controllers shall be weather- or soil moisture-based controllers that automatically adjust irrigation in response to changes in plants' needs as weather conditions change.
2. Weather-based controllers without integral rain sensors or communication systems that account for local rainfall shall have a separate wired or wireless rain sensor which connects or communicates with the controller(s). Soil moisture-based controllers are not required to have rain sensor input.

Note: More information regarding irrigation controller function and specifications is available from the Irrigation Association.

SECTION 5.305 WATER REUSE SYSTEMS

5.305.1 RECYCLED WATER SUPPLY SYSTEMS. Recycled water supply systems shall be installed in accordance with Sections 5.305.1.1, 5.305.1.2, and the California Plumbing Code.

5.304.2 Outdoor Recycled Water Supply Systems. All newly constructed nonresidential developments, where disinfected tertiary recycled water is available from a municipal source to a construction site, shall be provided with both a potable water supply system and a recycled water supply system. The recycled water supply system shall allow the use of reclaimed (recycled) water for aboveground and subsurface irrigation to all landscape irrigation systems.

For the purposes of Section 5.305.1.1, when a recycled water supply pipe is located within 300 feet from a construction site boundary, it shall be considered that reclaimed (recycled) water is available from a municipal source.

Exceptions:
1. Service areas in which the only reclaimed (recycled) water is used for potable purposes, or in which net nonpotable deliveries are anticipated to remain level or decrease as a result of the potable reuse project.
2. Where access to disinfected tertiary recycled water is not feasible and/or cost-efficient, as determined by the authority having jurisdiction in consultation with the recycled water purveyor.

Note: A city, county, or city and county, in consultation with the recycled water purveyor, may further reduce the area for the mandate to install recycled water supply systems if the recycled water purveyor is unable to accommodate new services or unable to provide uninterruptible service.

3. A potable water supply system is not required for landscape irrigation if the landscape irrigation system is supplied with recycled water at the time of final inspection.

4. Potable water may be used with the recycled water supply system on a temporary basis, as allowed by the authority having jurisdiction in consultation with the recycled water purveyor.

5.305.1.2 Technical Requirements for Outdoor Recycled Water Supply Systems. Recycled water supply systems for outdoor applications shall meet the requirements of this code, and the California Code of Regulations, Title 17, Division 1, Chapter 5, Subchapter 1; Title 22, Division 4, Chapter 3; and Title 23, Division 2, Chapter 2.7, as applicable.

DIVISION 5.4 MATERIAL CONSERVATION AND RESOURCE EFFICIENCY

SECTION 5.401 GENERAL

5.401.1 SCOPE. The provisions of this chapter shall outline means of achieving material conservation and resource efficiency through protection of buildings from exterior moisture, construction waste diversion, employment of techniques to reduce pollution through recycling of materials, and building commissioning or testing and adjusting.

SECTION 5.402 DEFINITIONS

5.402.1 DEFINITIONS. The following terms are defined in Chapter 2 *(and are included here for reference)*

ADJUST. To regulate fluid flow rate and air patterns at the terminal equipment, such as to reduce fan speed or adjust a damper.

BALANCE. To proportion flows within the distribution system, including sub-mains, branches and terminals, according to design quantities.

BUILDING COMMISSIONING. A systematic quality assurance process that spans the entire design and construction process, including verifying and documenting that building systems and components are planned, designed, installed, tested, operated and maintained to meet the owner's project requirements.

ORGANIC WASTE. Food waste, green waste, landscape and pruning wste, nonhazardous wood waste, and food soiled paper waste that is mixed in with food waste.

TEST. A procedure to determine quantitative performance of a system or equipment

SECTION 5.407 WATER RESISTANCE AND MOISTURE MANAGEMENT

5.407.1 WEATHER PROTECTION. Provide a weather-resistant exterior wall and foundation envelope as required by California Building Code Section 1403.2 (Weather Protection) and California Energy Code Section 150, (Mandatory Features and Devices), manufacturer's installation instructions or local ordinance, whichever is more stringent.

5.407.2 MOISTURE CONTROL. Employ moisture control measures by the following methods.

5.407.2.1 Sprinklers. Design and maintain landscape irrigation systems to prevent spray on structures.

5.407.2.2 Entries and openings. Design exterior entries and/or openings subject to foot traffic or wind-driven rain to prevent water intrusion into buildings as follows:

5.407.2.2.1 Exterior door protection. Primary exterior entries shall be covered to prevent water intrusion by using nonabsorbent floor and wall finishes within at least 2 feet around and perpendicular to such openings plus at least one of the following:

1. An installed awning at least 4 feet in depth.
2. The door is protected by a roof overhang at least 4 feet in depth.
3. The door is recessed at least 4 feet.
4. Other methods which provide equivalent protection.

5.407.2.2.2 Flashing. Install flashings integrated with a drainage plane.

SECTION 5.408 CONSTRUCTION WASTE REDUCTION, DISPOSAL AND RECYCLING

5.408.1 CONSTRUCTION WASTE MANAGEMENT. Recycle and/or salvage for reuse a minimum of 65% of the non-hazardous construction and demolition waste in accordance with Section 5.408.1.1, 5.408.1.2 or 5.408.1.3; or meet a local construction and demolition waste management ordinance, whichever is more stringent.

5.408.1.1 Construction waste management plan. Where a local jurisdiction does not have a construction and demolition waste management ordinance, submit a construction waste management plan that:

1. Identifies the construction and demolition waste materials to be diverted from disposal by efficient usage, recycling, reuse on the project or salvage for future use or sale.
2. Determines if construction and demolition waste materials will be sorted on-site (source-separated) or bulk mixed (single stream).
3. Identifies diversion facilities where construction and demolition waste material collected will be taken.
4. Specifies that the amount of construction and demolition waste materials diverted shall be calculated byweight or volume, but not by both.

5.408.1.2 Waste Management Company. Utilize a waste management company that can provide verifiable documentation that the percentage of construction and demolition waste material diverted from the landfill complies with this section.

Note: The owner or contractor shall make the determination if the construction and demolition waste material will be diverted by a waste management company.

Exceptions to Sections 5.408.1.1 and 5.408.1.2:

1. Excavated soil and land-clearing debris.
2. Alternate waste reduction methods developed by working with local agencies if diversion or recycle facilities capable of compliance with this item do not exist.
3. Demolition waste meeting local ordinance or calculated in consideration of local recycling facilities and markets.

5.408.1.3 Waste stream reduction alternative. The combined weight of new construction disposal that does not exceed two pounds per square foot of building area may be deemed to meet the 65% minimum requirement as approved by the enforcing agency.

5.408.1.4 Documentation. Documentation shall be provided to the enforcing agency which demonstrates compliance with Sections 5.408.1.1, through 5.408.1.3. The waste management plan shall be updated as necessary and shall be accessible during construction for examination by the enforcing agency.

Notes:

1. Sample forms found in "A Guide to the California Green Building Standards Code (Nonresidential)" located at www.bsc.ca.gov/Home/CALGreen.aspx may be used to assist in documenting compliance with the waste management plan.
2. Mixed construction and demolition debris processors can be located at the California Department of Resources Recycling and Recovery (CalRecycle).

5.408.2 UNIVERSAL WASTE. [A] Additions and alterations to a building or tenant space that meet the scoping provisions in Section 301.3 for nonresidential additions and alterations, shall require verification that Universal Waste items such as fluorescent lamps and ballast and mercury containing thermostats as well as other California prohibited Universal Waste materials are disposed of properly and are diverted from landfills. A list of prohibited Universal Waste materials shall be included in the construction documents.

Note: Refer to the Universal Waste Rule link at:
http://www.dtsc.ca.gov/LawsRegsPolicies/Regs/upload/OEAR-A_REGS_UWR_FinalText.pdf

5.408.3 EXCAVATED SOIL AND LAND CLEARING DEBRIS. 100 percent of trees, stumps, rocks and associated vegetation and soils resulting primarily from land clearing shall be reused or recycled. For a phased project, such material may be stockpiled on site until the storage site is developed.

Exception: Reuse, either on or off-site, of vegetation or soil contaminated by disease or pest infestation.

Notes:

1. If contamination by disease or pest infestation is suspected, contact the County Agricultural Commissioner and follow its direction for recycling or disposal of the material.
2. For a map of know pest and/or disease quarantine zones, consult with the California Department of Food and Agriculture. (www.cdfa.ca.gov)

SECTION 5.410 BUILDING MAINTENANCE AND OPERATIONS

5.410.1 RECYCLING BY OCCUPANTS. Provide readily accessible areas that serve the entire building and are identified for the depositing, storage and collection of non-hazardous materials for recycling, including (at a minimum) paper, corrugated cardboard, glass, plastics, organic waste, and metals or meet a lawfully enacted local recycling ordinance, if more restrictive.

Exception: Rural jurisdictions that meet and apply for the exemption in Public Resources Code 42649.82 (a)(2)(A) et seq. shall also be exempt from the organic waste portion of this section.

5.410.1.1 Additions. All additions conducted within a 12-month period under single or multiple permits, resulting in an increase of 30% or more in floor area, shall provide recycling areas on site.

Exception: Additions within a tenant space resulting in less than a 30% increase in the tenant space floor area.

5.410.1.2 Sample ordinance. Space allocation for recycling areas shall comply with Chapter 18, Part 3, Division 30 of the *Public Resources Code*. Chapter 18 is known as the California Solid Waste Reuse and Recycling Access Act of 1991 (Act).

Note: A sample ordinance for use by local agencies may be found in Appendix A of the document at the CalRecycle's web site.

5.410.2 COMMISSIONING. [N] New buildings 10,000 square feet and over. For new buildings 10,000 square feet and over, building commissioning shall be included in the design and construction processes of the building project to verify that the building systems and components meet the owner's or owner representative's project requirements. Commissioning shall be performed in accordance with this section by trained personnel with experience on projects of comparable size and complexity. For I-occupancies that are not regulated by OSHPD or for I-occupancies and L-occupancies that are not regulated y the California Energy Code Section 100.0 Scope, all requirements in Sections 5.410.2 through 5.410.2.6 shall apply.

Note: For energy-related systems under the scope (Section 100) of the California Energy Code, including heating, ventilation, air conditioning (HVAC) systems and controls, indoor lighting systems and controls, as well as water heating systems and controls, refer to California Energy Code Section 120.8 for commissioning requirements

Commissioning requirements shall include:

1. Owner's or Owner representative's project requirements.
2. Basis of design.
3. Commissioning measures shown in the construction documents.
4. Commissioning plan.
5. Functional performance testing.
6. Documentation and training.
7. Commissioning report.

Exceptions:

1. Unconditioned warehouses of any size.
2. Areas less than 10,000 square feet used for offices or other conditioned accessory spaces within unconditioned warehouses.
3. Tenant improvements less than 10,000 square feet as described in Section 303.1.1.
4. Open parking garages of any size, or open parking garage areas, of any size, within a structure.

Note: For the purposes of this section, unconditioned shall mean a building, area, or room which does not provide heating and or air conditioning.

Informational Notes:

1. IAS AC 476 is an accreditation criteria for organizations providing training and/or certification of commissioning personnel. AC 476 is available to the Authority Having Jurisdiction as a reference for qualifications of commissioning personnel. AC 476 des not certify individuals to conduct functional performance tests or to adjust and balance systems.
2. Functional performance testing for heating, ventilation, air conditioning systems and lighting controls must be performed in compliance with the *California Energy Code*.

5.410.2.1 Owner's or Owner Representative's Project Requirements (OPR). [N] The expectations and requirements of the building appropriate to its phase shall be documented before the design phase of the project begins. This documentation shall include the following:
1. Environmental and sustainability goals.
2. Building sustainable goals.
3. Indoor environmental quality requirements.
4. Project program, including facility functions and hours of operation, and need for after hours operation.
5. Equipment and systems expectations.
6. Building occupant and operation and maintenance (O&M) personnel expectations.

5.410.2.2 Basis of Design (BOD). [N] A written explanation of how the design of the building systems meets the OPR shall be completed at the design phase of the building project. The Basis of Design document shall cover the following systems:

1. Renewable energy systems.
2. Landscape irrigation systems.
3. Water reuse system.

5.410.2.3 Commissioning plan. [N] Prior to permit issuance a commissioning plan shall be completed to document how the project will be commissioned. The commissioning plan shall include the following:
1. General project information.
2. Commissioning goals.
3. Systems to be commissioned. Plans to test systems and components shall include:
   a. An explanation of the original design intent.
   b. Equipment and systems to be tested, including the extent of tests.
   c. Functions to be tested.
   d. Conditions under which the test shall be performed.
   e. Measurable criteria for acceptable performance.
4. Commissioning team information.
5. Commissioning process activities, schedules and responsibilities. Plans for the completion of commissioning shall be included.

5.410.2.4 Functional performance testing. [N] Functional performance tests shall demonstrate the correct installation and operation of each component, system and system-to-system interface in accordance with the approved plans and specifications. Functional performance testing reports shall contain information addressing each of the building components tested, the testing methods utilized, and include any readings and adjustments made.

5.410.2.5 Documentation and training. [N] A Systems Manual and Systems Operations Training are required, including Occupational Safety and Health Act (OSHA) requirements in *California Code of Regulations* (CCR), Title 8, Section 5142, and other related regulations.

5.410.2.5.1 Systems manual. [N] Documentation of the operational aspects of the building shall be completed within the systems manual and delivered to the building owner or representative. The systems manual shall include the following:
1. Site information, including facility description, history and current requirements.
2. Site contact information.
3. Basic operations and maintenance, including general site operating procedures, basic troubleshooting, recommended maintenance requirements, site events log.
4. Major systems.
5. Site equipment inventory and maintenance notes.
6. A copy of verifications required by the enforcing agency or this code.
7. Other resources and documentation, if applicable.

5.410.2.5.2 Systems operations training. [N] A program for training of the appropriate maintenance staff for each equipment type and/or system shall be developed and documented in the commissioning report and shall include the following:
1. System/equipment overview (what it is, what it does and with what other systems and/or equipment it interfaces).
2. Review and demonstration of servicing/preventive maintenance.
3. Review of the information in the Systems Manual.
4. Review of the record drawings on the system/equipment.

5.410.2.6 Commissioning report. [N] A report of commissioning process activities undertaken through the design and construction phases of the building project shall be completed and provided to the owner or representative.

5.410.4 TESTING AND ADJUSTING. New buildings less than 10,000 square feet. Testing and adjusting of systems shall be required for new buildings less than 10,000 square feet or new systems to serve an addition or alteration subject to Section 303.1.

5.410.4.2 (Reserved)

Note: For energy-related systems under the scope (Section 100) of the California Energy Code, including heating, ventilation, air conditioning (HVAC) systems and controls, indoor lighting system and controls, as well as water heating systems and controls, refer to California Energy Code Section 120.8 for commissioning requirements and Sections 120.5, 120.6, 130.4, and 140.9(b)3 for additional testing requirements of specific systems.

5.410.4.2 Systems. Develop a written plan of procedures for testing and adjusting systems. Systems to be included for testing and adjusting shall include at a minimum, as applicable to the project:

1. Renewable energy systems.
2. Landscape irrigation systems.
3. Water reuse systems.

5.410.4.3 Procedures. Perform testing and adjusting procedures in accordance with manufacturer's specifications and applicable standards on each system.

5.410.4.3.1 HVAC balancing. In addition to testing and adjusting, before a new space-conditioning system serving a building or space is operated for normal use, the system shall be balanced in accordance with the procedures defined by the Testing Adjusting and Balancing Bureau National Standards; the National Environmental Balancing Bureau Procedural Standards; Associated Air Balance Council National Standards or as approved by the enforcing agency.

5.410.4.4 Reporting. After completion of testing, adjusting and balancing, provide a final report of testing signed by the individual responsible for performing these services.

5.410.4.5 Operation and maintenance (O & M) manual. Provide the building owner or representative with detailed operating and maintenance instructions and copies of guaranties/warranties for each system. O & M instructions shall be consistent with OSHA requirements in CCR, Title 8, Section 5142, and other related regulations.

5.410.4.5.1 Inspections and reports. Include a copy of all inspection verifications and reports required by the enforcing agency.

DIVISION 5.5 ENVIRONMENTAL QUALITY

SECTION 5.501 GENERAL

5.501.1 SCOPE. The provisions of this chapter shall outline means of reducing the quantity of air contaminants that are odorous, irritating, and/or harmful to the comfort and well-being of a building's installers, occupants and neighbors.

SECTION 5.502 DEFINITIONS

5.502.1 DEFINITIONS. The following terms are defined in Chapter 2 *(and are included here for reference)*

ARTERIAL HIGHWAY. A general term denoting a highway primarily for through traffic usually on a continuous route.

A-WEIGHTED SOUND LEVEL (dBA). The sound pressure level in decibels as measured on a sound level meter using the internationally standardized A-weighting filter or as computed from sound spectral data to which A-weighting adjustments have been made.

1 BTU/HOUR. British thermal units per hour, also referred to as Btu. The amount of heat required to raise one pound of water one degree Fahrenheit per hour, a common measure of heat transfer rate. A ton of refrigeration is 12,000 Btu, the amount of heat required to melt a ton (2,000 pounds) of ice at 32^{0} Fahrenheit.

COMMUNITY NOISE EQUIVALENT LEVEL (CNEL). A metric similar to the day-night average sound level (Ldn), except that a 5 decibel adjustment is added to the equivalent continuous sound exposure level for evening hours (7pm to 10pm) in addition to the 10 dB nighttime adjustment used in the Ldn.

COMPOSITE WOOD PRODUCTS. Composite wood products include hardwood plywood, particleboard and medium density fiberboard. "Composite wood products" does not include hardboard, structural plywood, structural panels, structural composite lumber, oriented strand board, glued laminated timber, timber, prefabricated wood I–joists or finger–jointed lumber, all as specified in California Code of Regulations (CCR), Title 17, Section 93120.1(a).

Note: See CCR, Title 17, Section 93120.1.

DAY-NIGHT AVERAGE SOUND LEVEL (Ldn). The A-weighted equivalent continuous sound exposure level for a 24-hour period with a 10 dB adjustment added to sound levels occurring during nighttime hours (10p.m. to 7 a.m.).

DECIBEL (db). A measure on a logarithmic scale of the magnitude of a particular quantity (such as sound pressure, sound power, sound intensity) with respect to a reference quantity.

ELECTRIC VEHICLE (EV). An automotive-type vehicle for on-road use, such as passenger automobiles, buses, trucks, vans, neighborhood electric vehicles, electric motorcycles, and the like, primarily powered by an electric motor that draws current from a rechargeable storage battery, fuel cell, photovoltaic array, or other source of electric current. Plug-in hybrid electric vehicles (PHEV) are considered electric vehicles. For purposes of the *California Electrical Code*, off-road, self-propelled electric vehicles, such as industrial trucks, hoists, lifts, transports, golf carts, airline ground support equipment, tractors, boats, and the like, are not included.

ELECTRIC VEHICLE CHARGING STATION(S) (EVCS)). One or more spaces intended for charging electric vehicles.

ELECTRIC VEHICLE SUPPLY EQUIPMENT (EVSE). The conductors, including the ungrounded, grounded, and equipment grounding conductors and the electric vehicle connectors, attachment plugs, and all other fittings, devices, power outlets, or apparatus installed specifically for the purpose of transferring energy between the premises wiring and the electric vehicle.

ENERGY EQUIVALENT (NOISE) LEVEL (Leq). The level of a steady noise which would have the same energy as the fluctuating noise level integrated over the time of period of interest.

EXPRESSWAY. An arterial highway for through traffic which may have partial control of access, but which may or may not be divided or have grade separations at intersections.

FREEWAY. A divided arterial highway with full control of access and with grade separations at intersections.

GLOBAL WARMING POTENTIAL (GWP). The radiative forcing impact of one mass-based unit of a given greenhouse gas relative to an equivalent unit of carbon dioxide over a given period of time. Carbon dioxide is the reference compound with a GWP of one.

GLOBAL WARMING POTENTIAL VALUE (GWP VALUE). A 100-year GWP value published by the Intergovernmental Panel on Climate Change (IPCC) in either its Second Assessment Report (SAR) (IPCC, 1995); or its Fourth Assessment A-3 Report (AR4) (IPCC, 2007). The SAR GWP values are found in column "SAR (100-yr)" of Table 2.14.; the AR4 GWP values are found in column "100 yr" of Table 2.14.

HIGH-GWP REFRIGERANT. A compound used as a heat transfer fluid or gas that is: (a) a chlorofluorocarbon, a hdrochlorofluorocarbon, a hydrofluorocarbon, a perfluorocarbon, or any compound or blend of compounds, with a GWP value equal to or greater than 150, or (B) any ozone depleting substance as defined in Title 40 of the Code of Federal Regulations, Part 82, sec.82.3 (as amended March 10, 2009).

LONG RADIUS ELBOW. Pipe fitting installed between two lengths of pipe or tubing to allow a change of direction, with a radius 1.5 times the pipe diameter.

LOW-GWP REFRIGERANT. A compound used as a heat transfer fluid or gas that: (A) has a GWP value less than 150, and (B) is not an ozone depleting substance as defined in Title 40 of the Code of Federal Regulations, Part 82, sec.82.3 (as amended March 10, 2009).

MERV. Filter minimum efficiency reporting value, based on ASHRAE 52.2–1999.

MAXIMUM INCREMENTAL REACTIVITY (MIR). The maximum change in weight of ozone formed by adding a compound to the "Base REactive Organic Gas (ROG) Mixture" per weight of compound added, expressed to hundreths of a gram (g O^{3}/g ROC).

PRODUCT-WEIGHTED MIR (PWMIR). The sum of all weighted-MIR for all ingredients in a product subject to this article. The PWMIR is the total product reactivity expressed to hundredths of a gram of ozone formed per gram of product (excluding container and packaging).

PSIG. Pounds per square inch, guage.

REACTIVE ORGANIC COMPOUND (ROC). Any compound that has the potential, once emitted, to contribute to ozone formation in the troposphere.

SCHRADER ACCESS VALVES. Access fittings with a valve core installed.

SHORT RADIUS ELBOW. Pipe fitting installed between two lengths of pipe or tubing to allow a change of direction, with a radius 1.0 times the pipe diameter.

SUPERMARKET. For the purposes of Section 5.508.2, a supermarket is any retail food facility with 8,000 square feet or more conditioned area, and that utilizes either refrigerated display cases, or walk-in coolers or freezers connected to remote compressor units or condensing units.

VOC. A volatile organic compound broadly defined as a chemical compound based on carbon chains or rings with vapor pressures greater than 0.1 millimeters of mercury at room temperature. These compounds typically contain hydrogen and may contain oxygen, nitrogen and other elements. See CCR Title 17, Section 94508(a)

Note: Where specific regulations are cited from different agencies such as SCAQMD, ARB, etc., the VOC definition included in that specific regulation is the one that prevails for the specific measure in question.

SECTION 5.503 FIREPLACES

5.503.1 FIREPLACES. Install only a direct-vent sealed-combustion gas or sealed wood-burning fireplace, or a sealed woodstove or pellet stove, and refer to residential requirements in the California Energy Code, Title 24, Part 6, Subchapter 7, Section 150. Woodstoves, pellet stoves and fireplaces shall comply with applicable local ordinances.

5.503.1.1 Woodstoves. Woodstoves and pellet stoves shall comply with U.S. EPA New Source Performance Standards (NSPS) emission limits as applicable, and shall have a permanent label indicating they are certified to meet the emission limits.

SECTION 5.504 POLLUTANT CONTROL

5.504.1 TEMPORARY VENTILATION. The permanent HVAC system shall only be used during construction if necessary to condition the building or areas of addition or alteration within the required temperature range for material and equipment installation. If the HVAC system is used during construction, use return air filters with a Minimum Efficiency Reporting Value (MERV) of 8, based on ASHRAE 52.2-1999, or an average efficiency of 30% based on ASHRAE 52.1-1992 Replace all filters immediately prior to occupancy, or, if the building is occupied during alteration, at the conclusion of construction.

5.504.3 Covering of duct openings and protection of mechanical equipment during construction. At the time of rough installation, or during storage on the construction site and until final startup of the heating, cooling and ventilating equipment, all duct and other related air distribution component openings shall be covered with tape, plastic, sheet metal or other methods acceptable to the enforcing agency to reduce the amount of dust, water and debris which may collect in the system.

MUNOZ and ASSOCIATES ARCHITECTS
239 Capitol Street
Salinas, Ca. 93901
salvador.munoz@munozarchitects.com
www.munozarchitects.com
(831)320-0498

COPYRIGHT NOTICE

REGISTERED PROFESSIONAL ARCHITECT
SALVADOR F. MUNOZ
CA.18898
EXP. 11-30-2025
CALIFORNIA

JOB NUMBER
002-2018

REV	DATE	DESCRIPTION
1	06-01-21	REVISION
2	12-4-2024	FLOODPROOF REVISION

APN
117-323-011-000

OUR LADY OF ASSUMPTION CHURCH
100 SALINAS ROAD
(PAJARO) WATSONVILLE, CA 95076

SHEET TITLE
CALIFORNIA GREEN BUILDING STANDARDS

SHEET NUMBER
G 4.0

DATE: 12-4-2024

2016 CALIFORNIA GREEN BUILDING STANDARDS CODE

NONRESIDENTIAL MANDATORY MEASURES, SHEET 1 (INCLUDING JULY 1, 2018, INTERVENING SUPPLEMENT)

Y = YES
N/A = NOT APPLICABLE
RESPON. PARTY = RESPONSIBLE PARTY (ie: ARCHITECT, ENGINEER, OWNER, CONTRACTOR, INSPECTOR ETC.)

5.504.4 FINISH MATERIAL POLLUTANT CONTROL. Finish materials shall comply with Sections 5.504.4.1 through 5.504.4.6.

5.504.4.1 Adhesives, sealants and caulks. Adhesives, sealants, and caulks used on the project shall meet the requirements of the following standards:

1. Adhesives, adhesive bonding primers adhesive primers, sealants, sealant primers and caulks shall comply with local or regional air pollution control or air quality management district rules where applicable, or SCAQMD Rule 1168 VOC limits, as shown in Tables 5.504.4.1 and 5.504.4.2. Such products also shall comply with the Rule 1168 prohibition on the use of certain toxic compounds (chloroform, ethylene dichloride, methylene chloride, perchloroethylene and trichloroethylene), except for aerosol products as specified in subsection 2, below.

2. Aerosol adhesives, and smaller unit sizes of adhesives, and sealant or caulking compounds (in units of product, less packaging, which do not weigh more than one pound and do not consist of more than 16 fluid ounces) shall comply with statewide VOC standards and other requirements, including prohibitions on use of certain toxic compounds, of *California Code of Regulations*, Title 17, commencing with Section 94507.

TABLE 5.504.4.1 - ADHESIVE VOC LIMIT[1,2]

Less Water and Less Exempt Compounds in Grams per Liter

ARCHITECTURAL APPLICATIONS	CURRENT VOC LIMIT
INDOOR CARPET ADHESIVES	50
CARPET PAD ADHESIVES	50
OUTDOOR CARPET ADHESIVES	150
WOOD FLOORING ADHESIVES	100
RUBBER FLOOR ADHESIVES	60
SUBFLOOR ADHESIVES	50
CERAMIC TILE ADHESIVES	65
VCT & ASPHALT TILE ADHESIVES	50
DRYWALL & PANEL ADHESIVES	50
COVE BASE ADHESIVES	50
MULTIPURPOSE CONSTRUCTION ADHESIVES	70
STRUCTURAL GLAZING ADHESIVES	100
SINGLE-PLY ROOF MEMBRANE ADHESIVES	250
OTHER ADHESIVES NOT SPECIFICALLY LISTED	50
SPECIALTY APPLICATIONS	
PVC WELDING	510
CPVC WELDING	490
ABS WELDING	325
PLASTIC CEMENT WELDING	250
ADHESIVE PRIMER FOR PLASTIC	550
CONTACT ADHESIVE	80
SPECIAL PURPOSE CONTACT ADHESIVE	250
STRUCTURAL WOOD MEMBER ADHESIVE	140
TOP & TRIM ADHESIVE	250
SUBSTRATE SPECIFIC APPLICATIONS	
METAL TO METAL	30
PLASTIC FOAMS	50
POROUS MATERIAL (EXCEPT WOOD)	50
WOOD	30
FIBERGLASS	80

1. IF AN ADHESIVE IS USED TO BOND DISSIMILAR SUBSTRATES TOGETHER, THE ADHESIVE WITH THE HIGHEST VOC CONTENT SHALL BE ALLOWED.

2. FOR ADDITIONAL INFORMATION REGARDING METHODS TO MEASURE THE VOC CONTENT SPECIFIED IN THIS TABLE, SEE SOUTH COAST AIR QUALITY MANAGEMENT DISTRICT RULE 1168, www.arb.ca.gov/DRDB/SC/CURHTML/R1168.PDF

TABLE 5.504.4.2 - SEALANT VOC LIMIT

Less Water and Less Exempt Compounds in Grams per Liter

SEALANTS	CURRENT VOC LIMIT
ARCHITECTURAL	250
MARINE DECK	760
NONMEMBRANE ROOF	300
ROADWAY	250
SINGLE-PLY ROOF MEMBRANE	450
OTHER	420
SEALANT PRIMERS	
ARCHITECTURAL	
NONPOROUS	250
POROUS	775
MODIFIED BITUMINOUS	500
MARINE DECK	760
OTHER	750

NOTE: FOR ADDITIONAL INFORMATION REGARDING METHODS TO MEASURE THE VOC CONTENT SPECIFIED IN THESE TABLES, SEE SOUTH COAST AIR QUALITY MANAGEMENT DISTRICT RULE 1168.

5.504.4.3 Paints and coatings. Architectural paints and coatings shall comply with VOC limits in Table 1 of the ARB Architectural Coatings Suggested Control Measure, as shown in Table 5.504.4.3, unless more stringent local limits apply. The VOC content limit for coatings that do not meet the definitions for the specialty coatings categories listed in Table 5.504.4.3 shall be determined by classifying the coating as a Flat, Nonflat or Nonflat-High Gloss coating, based on its gloss, as defined in Subsections 4.21, 4.36 and 4.37 of the 2007 California Air Resources Board Suggested Control Measure, and the corresponding Flat, Nonflat or Nonflat-High Gloss VOC limit in Table 5.504.4.3 shall apply.

5.504.4.3.1 Aerosol Paints and coatings. Aerosol paints and coatings shall meet the PWMIR Limits for ROC in Section 94522(a)(3) and other requirements, including prohibitions on use of certain toxic compounds and ozone depleting substances, in Sections 94522(c)(2) and (d)(2) of *California Code of Regulations*, Title 17, commencing with Section 94520; and in areas under the jurisdiction of the Bay Area Air Quality Management District additionally comply with the percent VOC by weight of product limits of Regulation 8 Rule 49.

TABLE 5.504.4.3 - VOC CONTENT LIMITS FOR ARCHITECTURAL COATINGS[2,3]

GRAMS OF VOC PER LITER OF COATING, LESS WATER & LESS EXEMPT COMPOUNDS

COATING CATEGORY	CURRENT VOC LIMIT
FLAT COATINGS	50
NONFLAT COATINGS	100
NONFLAT HIGH GLOSS COATINGS	150
SPECIALTY COATINGS	
ALUMINUM ROOF COATINGS	400
BASEMENT SPECIALTY COATINGS	400
BITUMINOUS ROOF COATINGS	50
BITUMINOUS ROOF PRIMERS	350
BOND BREAKERS	350
CONCRETE CURING COMPOUNDS	350
CONCRETE/MASONRY SEALERS	100
DRIVEWAY SEALERS	50
DRY FOG COATINGS	150
FAUX FINISHING COATINGS	350
FIRE RESISTIVE COATINGS	350
FLOOR COATINGS	100
FORM-RELEASE COMPOUNDS	250
GRAPHIC ARTS COATINGS (SIGN PAINTS)	500
HIGH-TEMPERATURE COATINGS	420
INDUSTRIAL MAINTENANCE COATINGS	250
LOW SOLIDS COATINGS[1]	120
MAGNESITE CEMENT COATINGS	450
MASTIC TEXTURE COATINGS	100
METALLIC PIGMENTED COATINGS	500
MULTICOLOR COATINGS	250
PRETREATMENT WASH PRIMERS	420
PRIMERS, SEALERS, & UNDERCOATERS	100
REACTIVE PENETRATING SEALERS	350
RECYCLED COATINGS	250
ROOF COATINGS	50
RUST PREVENTATIVE COATINGS	250
SHELLACS:	
CLEAR	730
OPAQUE	550
SPECIALTY PRIMERS, SEALERS & UNDERCOATERS	100
STAINS	250
STONE CONSOLIDANTS	450
SWIMMING POOL COATINGS	340
TRAFFIC MARKING COATINGS	100
TUB & TILE REFINISH COATINGS	420
WATERPROOFING MEMBRANES	250
WOOD COATINGS	275
WOOD PRESERVATIVES	350
ZINC-RICH PRIMERS	340

1. GRAMS OF VOC PER LITER OF COATING, INCLUDING WATER & EXEMPT COMPOUNDS

2. THE SPECIFIED LIMITS REMAIN IN EFFECT UNLESS REVISED LIMITS ARE LISTED IN SUBSEQUENT COLUMNS IN THE TABLE.

3. VALUES IN THIS TABLE ARE DERIVED FROM THOSE SPECIFIED BY THE CALIFORNIA AIR RESOURCES BOARD, ARCHITECTURAL COATINGS SUGGESTED CONTROL MEASURE, FEB. 1, 2008. MORE INFORMATION IS AVAILABLE FROM THE AIR RESOURCES BOARD.

5.504.4.3.2 Verification. Verification of compliance with this section shall be provided at the request of the enforcing agency. Documentation may include, but is not limited to, the following:

1. Manufacturer's product specification
2. Field verification of on-site product containers

5.504.4.4 Carpet Systems. All carpet installed in the building interior shall meet at least one of the testing and product requirements:

1. Carpet and Rug Institute's Green Label Plus Program.
2. Compliant with the VOC-emission limits and testing requirements specified in the California Department of Public Health Standard Method for the Testing and Evaluation of Volatile Organic Chemical Emissions from Indoor Sources Using Environmental Chambers, Version 1.1, February 2010 (also known as CDPH Standard Method V1.1 or Specification 01350).
3. NSF/ANSI 140 at the Gold level or higher;
4. Scientific Certifications Systems Sustainable Choice; or
5. Compliant with the Collaborative for High Performance Schools California (CA-CHPS) Criteria Interpretation for EQ 7.0 and EQ 7.1 (formerly EQ 2.2) dated July 2012 and listed in the CHPS High Performance Product Database.

5.504.4.4.1 Carpet cushion. All carpet cushion installed in the building interior shall meet the requirements of the Carpet and Rug Institute Green Label program.

5.504.4.4.2 Carpet adhesive. All carpet adhesive shall meet the requirements of Table 5.504.4.1.

5.504.4.5 Composite wood products. Hardwood plywood, particleboard and medium density fiberboard composite wood products used on the interior or exterior of the buildings shall meet the requirements for formaldehyde as specified in ARB's Air Toxics Control Measure for Composite Wood (17 CCR 93120 et seq.). Those materials not exempted under the ATCM must meet the specified emission limits, as shown in Table 5.504.4.5.

5.504.4.5.3 Documentation. Verification of compliance with this section shall be provided as requested by the enforcing agency. Documentation shall include at least one of the following:

1. Product certifications and specifications.
2. Chain of custody certifications.
3. Product labeled and invoiced as meeting the Composite Wood Products regulation (see CCR, Title 17, Section 93120, et seq.).
4. Exterior grade products marked as meeting the PS-1 or PS-2 standards of the Engineered Wood Association, the Australian AS/NZS 2269 or European 636 3S standards.
5. Other methods acceptable to the enforcing agency.

TABLE 5.504.4.5 - FORMALDEHYDE LIMITS[1]

MAXIMUM FORMALDEHYDE EMISSIONS IN PARTS PER MILLION

PRODUCT	CURRENT LIMIT
HARDWOOD PLYWOOD VENEER CORE	0.05
HARDWOOD PLYWOOD COMPOSITE CORE	0.05
PARTICLE BOARD	0.09
MEDIUM DENSITY FIBERBOARD	0.11
THIN MEDIUM DENSITY FIBERBOARD[2]	0.13

1. VALUES IN THIS TABLE ARE DERIVED FROM THOSE SPECIFIED BY THE CALIFORNIA AIR RESOURCES BOARD, AIR TOXICS CONTROL MEASURE FOR COMPOSITE WOOD AS TESTED IN ACCORDANCE WITH ASTM E 1333. FOR ADDITIONAL INFORMATION, SEE CALIFORNIA CODE OF REGULATIONS, TITLE 17, SECTIONS 93120 THROUGH 93120.12.

2. THIN MEDIUM DENSITY FIBERBOARD HAS A MAXIMUM THICKNESS OF 5/16 INCHES (8 MM).

5.504.4.6 Resilient flooring systems. For 80 percent of floor area receiving resilient flooring, installed resilient flooring shall meet at least one of the following:

1. Certified under the Resilient Floor Covering Institute (RFCI) FloorScore program;
2. Compliant with the VOC-emission limits and testing requirements specified in the California Department of Public Health's 2010 Standard Method for the Testing and Evaluation Chambers, Version 1.1, February 2010;
3. Compliant with the Collaborative for High Performance Schools California (CA-CHPS) Criteria Interpretation for EQ 7. and EQ 7.1 (formerly EQ 2.2) dated July 2012 and listed in the CHPS High Performance Product DataBase; or
4. Products certified under UL GREENGUARD Gold (formerly the Greenguard Children's & Schools Program).

5.504.4.6.1 Verification of compliance. Documentation shall be provided verifying that resilient flooring materials meet the pollutant emission limits.

5.504.5.3 Filters. In mechanically ventilated buildings, provide regularly occupied areas of the building with air filtration media for outside and return air that provides at least a Minimum Efficiency Reporting Value (MERV) of 8. MERV 8 filters shall be installed prior to occupancy, and recommendations for maintenance with filters of the same value shall be included in the operation and maintenance manual.

Exceptions:

1. An ASHRAE 10% to 15% efficiency filter shall be permitted for an HVAC unit meeting the 2013 California Energy Code having 60,000 Btu/h or less capacity per fan coil, if the energy use of the air delivery system is 0.4 W/cfm or less at design air flow.
2. Existing mechanical equipment.

5.504.5.3.1 Labeling. Installed filters shall be clearly labeled by the manufacturer indicating the MERV rating.

5.504.7 ENVIRONMENTAL TOBACCO SMOKE (ETS) CONTROL. Where outdoor areas are provided for smoking, prohibit smoking within 25 feet of building entries, outdoor air intakes and operable windows and within the building as already prohibited by other laws or regulations; or as enforced by ordinances, regulations or policies of any city, county, city and county, California Community College, campus of the California State University, or campus of the University of California, whichever are more stringent. When ordinances, regulations or policies are not in place, post signage to inform building occupants of the prohibitions.

SECTION 5.505 INDOOR MOISTURE CONTROL

5.505.1 INDOOR MOISTURE CONTROL. Buildings shall meet or exceed the provisions of *California Building Code*, CCR, Title 24, Part 2, Sections 1203 (Ventilation) and Chapter 14 (Exterior Walls). For additional measures not applicable to low-rise residential occupancies, see Section 5.407.2 of this code.

SECTION 5.506 INDOOR AIR QUALITY

5.506.1 OUTSIDE AIR DELIVERY. For mechanically or naturally ventilated spaces in buildings, meet the minimum requirements of Section 120.1 (Requirements For Ventilation) of the *California Energy Code*, or the applicable local code, whichever is more stringent, and Division 1, Chapter 4 of CCR, Title 8.

5.506.2 CARBON DIOXIDE (CO_2) MONITORING. For buildings or additions equipped with demand control ventilation, CO_2 sensors and ventilation controls shall be specified and installed in accordance with the requirements of the California Energy Code, Section 120(c)(4).

SECTION 5.507 ENVIRONMENTAL COMFORT

5.507.4 ACOUSTICAL CONTROL. Employ building assemblies and components with Sound Transmission Class (STC) values determined in accordance with ASTM E 90 and ASTM E 413, or Outdoor-Indoor Sound Transmission Class (OITC) determined in accordance with ASTM E 1332, using either the prescriptive or performance method in Section 5.507.4.1 or 5.507.4.2.

Exception: Buildings with few or no occupants or where occupants are not likely to be affected by exterior noise, as determined by the enforcement authority, such as factories, stadiums, storage, enclosed parking structures and utility buildings.

Exception: [DSA-SS] For public schools and community colleges, the requirements of this section and all subsections apply only to new construction.

5.507.4.1 Exterior noise transmission, prescriptive method. Wall and roof-ceiling assemblies exposed to the noise source making up the building or addition envelope or altered envelope shall meet a composite STC rating of at least 50 or a composite OITC rating of no less than 40, with exterior windows of a minimum STC of 40 or OITC of 30 in the following locations:

1. Within the 65 CNEL noise contour of an airport.

Exceptions:

a. L_{dn} or CNEL for military airports shall be determined by the facility Air Installation Compatible Land Use Zone (AICUZ) plan.
b. L_{dn} or CNEL for other airports and heliports for which a land use plan has not been developed shall be determined by the local general plan noise element.

2. Within the 65 CNEL or L_{dn} noise contour of a freeway or expressway, railroad, industrial source or fixed-guideway source as determined by the Noise Element of the General Plan.

5.507.4.1.1. Noise exposure where noise contours are not readily available. Buildings exposed to a noise level of 65 dB L_{eq} - 1-hr during any hour of operation shall have building, addition or alteration exterior wall and roof-ceiling assemblies exposed to the noise source meeting a composite STC rating of at least 45 (or OITC 35), with exterior windows of a minimum STC of 40 (or OITC 30).

5.507.4.2 Performance Method. For buildings located as defined in Section 5.507.4.1 or 5.507.4.1.1, wall and roof-ceiling assemblies exposed to the noise source making up the building or addition envelope or altered envelope shall be constructed to provide an interior noise environment attributable to exterior sources that does not exceed an hourly equivalent noise level (Leq-1Hr) of 50 dBA in occupied areas during any hour of operation.

5.507.4.2.1 Site Features. Exterior features such as sound walls or earth berms may be utilized as appropriate to the building, addition or alteration project to mitigate sound migration to the interior.

5.507.4.2.2 Documentation of Compliance. An acoustical analysis documenting complying interior soundlevels shall be prepared by personnel approved by the architect or engineer of record.

5.507.4.3 Interior sound transmission. Wall and floor-ceiling assemblies separating tenant spaces and tenant spaces and public places shall have an STC of at least 40.

Note: Examples of assemblies and their various STC ratings may be found at the California Office of Noise Control: www.toolbase.org/PDF/CaseStudies/stc_icc_ratings.pdf.

SECTION 5.508 OUTDOOR AIR QUALITY

5.508.1 Ozone depletion and greenhouse gas reductions. Installations of HVAC, refrigeration and fire suppression equipment shall comply with Sections 5.508.1.1 and 5.508.1.2.

5.508.1.1 Chlorofluorocarbons (CFCs). Install HVAC, refrigeration and fire suppression equipment that do not contain CFCs.

5.508.1.2 Halons. Install HVAC, refrigeration and fire suppression equipment that do not contain Halons.

5.508.2 Supermarket refrigerant leak reduction. New commercial refrigeration systems shall comply with the provisions of this section when installed in retail food stores 8,000 square feet or more conditioned area, and that utilize either refrigerated display cases, or walk-in coolers or freezers connected to remote compressor units or condensing units. The leak reduction measures apply to refrigeration systems containing high-global-warming potential (high-GWP) refrigerants with a GWP of 150 or greater. New refrigeration systems include both new facilities and the replacement of existing refrigeration systems in existing facilities.

Exception: Refrigeration systems containing low-global warming potential (low-GWP) refrigerant with a GWP value less than 150 are not subject to this section. Low-GWP refrigerants are nonozone-depleting refrigerants that include ammonia, carbon dioxide (CO_2), and potentially other refrigerants.

5.508.2.1 Refrigerant piping. Piping compliant with the California Mechanical Code shall be installed to be accessible for leak protection and repairs. Piping runs using threaded pipe, copper tubing with an outside diameter (OD) less than 1/4 inch, flared tubing connections and short radius elbows shall not be used in refrigerant systems except as noted below.

5.508.2.1.1 Threaded pipe. Threaded connections are permitted at the compressor rack.

5.508.2.1.2 Copper pipe. Copper tubing with an OD less than 1/4 inch may be used in systems with a refrigerant charge of 5 pounds or less.

5.508.2.1.2.1 Anchorage. One-fouth-inch OD tubing shall be securely clamped to a rigid base to keep vibration levels below 8 mils.

5.508.2.1.3 Flared tubing connections. Double-flared tubing connections may be used for pressure controls, valve pilot lines and oil.

Exception: Single-flared tubing connections may be used with a multiring seal coated with industrial sealant suitable for use with refrigerants and tightened in accordance with manufacturer's recommendations.

5.508.2.1.4 Elbows. Short radius elbows are only permitted where space limitations prohibit use of long radius elbows.

5.508.2.2 Valves. Valves Valves and fittings shall comply with the *California Mechanical Code* and as follows.

5.508.2.2.1 Pressure relief valves. For vessels containing high-GWP refrigerant, a rupture disc shall be installed between the outlet of the vessel and the inlet of the pressure relief valve.

5.508.2.2.1.1 Pressure detection. A pressure gauge, pressure transducer or other device shall be installed in the space between the rupture disc and the relief valve inlet to indicate a disc rupture or discharge of the relief valve.

5.508.2.2.2 Access valves. Only Schrader access valves with a brass or steel body are permitted for use.

5.508.2.2.2.1 Valve caps. For systems with a refrigerant charge of 5 pounds or more, valve caps shall be brass or steel and not plastic.

5.508.2.2.2.2 Seal caps. If designed for it, the cap shall have a neoprene O-ring in place.

5.508.2.2.2.2.1 Chain tethers. Chain tethers to fit ovr the stem are required for valves designed to have seal caps.

Exception: Valves with seal caps that are not removed from the valve during stem operation.

5.508.2.3 Refrigerated service cases. Refrigerated service cases holding food products containing vinegar and salt shall have evaporator coils of corrosion-resistant material, such as stainless steel; or be coated to prevent corrosion from these substances.

5.508.2.3.1 Coil coating. Consideration shall be given to the heat transfer efficiency of coil coating to maximize energy efficiency.

5.508.2.4 Refrigerant receivers. Refrigerant receivers with capacities greater than 200 pounds shall be fitted with a device tha indicates the level of refrigerant in the receiver.

5.508.2.5 Pressure testing. The system shall be pressure tested during installation prior to evacuation and charging.

5.508.2.5.1 Minimum pressure. The system shall be charged with regulated dry nitrogen and appropriate tracer gas to bring system pressure up to 300 psig minimum.

5.508.2.5.2 Leaks. Check the system for leaks, repair any leaks, and retest for pressure using the same gauge.

5.508.2.5.3 Allowable pressure change. The system shall stand, unaltered, for 24 hours with no more than a +/- one pound pressure change from 300 psig, measured with the same gauge.

5.508.2.6 Evacuation. The system shall be evacuated after pressure testing and prior to charging.

5.508.2.6.1 First vacuum. Pull a system vacuum down to at least 1000 microns (+/- 50 microns), and hold for 30 minutes.

5.508.2.6.2 Second vacuum. Pull a second system vacuum to a minimum of 500 microns and hold for 30 minutes.

5.508.2.6.3 Third vacuum. Pull a third vacuum down to a minimum of 300 microns, and hold for 24 hours with a maximum drift of 100 microns over a 24-hour period.

CHAPTER 7
INSTALLER & SPECIAL INSPECTOR QUALIFICATIONS

702 QUALIFICATIONS

702.1 INSTALLER TRAINING. HVAC system installers shall be trained and certified in the proper installation of HVAC systems including ducts and equipment by a nationally or regionally recognized training or certification program. Uncertified persons may perform HVAC installations when under the direct supervision and responsibility of a person trained and certified to install HVAC systems or contractor licensed to install HVAC systems. Examples of acceptable HVAC training and certification programs include but are not limited to the following:

1. State certified apprenticeship programs.
2. Public utility training programs.
3. Training programs sponsored by trade, labor or statewide energy consulting or verification organizations.
4. Programs sponsored by manufacturing organizations.
5. Other programs acceptable to the enforcing agency.

702.2 SPECIAL INSPECTION [HCD]. When required by the enforcing agency, the owner or the responsible entity acting as the owner's agent shall employ one or more special inspectors to provide inspection or other duties necessary to substantiate compliance with this code. Special inspectors shall demonstrate competence to the satisfaction of the enforcing agency for the particular type of inspection or task to be performed. In addition to other certifications or qualifications acceptable to the enforcing agency, the following certifications or education may be considered by the enforcing agency when evaluating the qualifications of a special inspector:

1. Certification by a national or regional green building program or standard publisher.
2. Certification by a statewide energy consulting or verification organization, such as HERS raters, building performance contractors, and home energy auditors.
3. Successful completion of a third party apprentice training program in the appropriate trade.
4. Other programs acceptable to the enforcing agency.

Notes:

1. Special inspectors shall be independent entities with no financial interest in the materials or the project they are inspecting for compliance with this code.
2. HERS raters are special inspectors certified by the California Energy Commission (CEC) to rate homes in California according to the Home Energy Rating System (HERS).

[BSC-CG] When required by the enforcing agency, the owner or the responsible entity acting as the owner's agent shall employ one or more special inspectors to provide inspection or other duties necessary to substantiate compliance with this code. Special inspectors shall demonstrate competence to the satisfaction of the enforcing agency for the particular type of inspection or task to be performed. In addition, the special inspector shall have a certification from a recognized state, national or international association, as determined by the local agency. The area of certification shall be closely related to the primary job function, as determined by the local agency.

Note: Special inspectors shall be independent entities with no financial interest in the materials or the project they are inspecting for compliance with this code.

703 VERIFICATIONS

703.1 DOCUMENTATION. Documentation used to show compliance with this code shall include but is not limited to, construction documents, plans, specifications, builder or installer certification, inspection reports, or other methods acceptable to the enforcing agency which demonstrate substantial conformance. When specific documentation or special inspection is necessary to verify compliance, that method of compliance will be specified in the appropriate section or identified applicable checklist.

MUNOZ and ASSOCIATES ARCHITECTS
230 Capitol Street
Salinas, Ca. 93901
salvador@munozandassociatesarchitects.com
www.amunozarchitects.com
(831)320-0468

COPYRIGHT NOTICE

REGISTERED PROFESSIONAL ARCHITECT
SALVADOR F. MUNOZ
CA.18898
EXP. 11-30-2025
CALIFORNIA

JOB NUMBER
002-2018

REV	DATE	DESCRIPTION
1	06-01-21	REVISION
2	12-4-2024	FLOODPROOF REVISION

APN
117-323-011-000

OUR LADY OF ASSUMPTION CHURCH

100 SALINAS ROAD

(PAJARO) WATSONVILLE, CA 95076

SHEET TITLE
CALIFORNIA GREEN BUILDING STANDARDS

SHEET NUMBER
G 5.0

DATE: 12-4-2024

GENERAL NOTES

1.) THE GRADE SHALL SLOPE AT LEAST 5% AWAY AND WITHIN 10 FEET OF FOUNDATION, EXCEPT @ PAVEMENT. (SEE ACCESSIBLE NOTES TO THE RIGHT)

PARKING JUSTIFICATION

1. BLDG. A –EXISTING CHURCH

TYPE: VB NON SPRINKLED
OCC: A–3
ALLOWABLE AREA CALC.
BASIC ALLOWED: 6,000 SF.
INCREASE 51% 3,050 SF. (CBC. 506.2)
TOTAL AREA: 9,060 SF.
ACTUAL AREA: 7,305 SF.

PARKING PROVIDED 114 SPACES + 26 SHARED SPACES WITH LIBRARY BLDG.
TOTAL PARKING SPACES PROVIDED 140
PARKING REQ. 110 SPACES
(441 SEATS @ 1/STALL /4 SEATS = 110 REQ.)

STANDARD PARKING SPACES 98
COMPACT PARKING SPACES 14 (SPACES 83–96)
ADA PARKING SAPACES 7 (SPACES: 5–7,15–106, AT LIBRARY 10,12)

EXISTING CHURCH TOTAL PARKING PROVIDED 114 SPACES
NEW SPACES: 0

PROVIDED SHARED LIBRARY BLDG. PARKING SPACES 26

2. BLDG. B –PARISH HALL

TYPE: VA SPRINKLED (SM)
OCC: A–3
ALLOWABLE AREA CALC.
BASIC ALLOWED: 34,500 SF.
ACTUAL AREA: 5,430 SF

B1– FIRST FLOOR

MULTIPUPOSE HALL
1250 SF @ $\frac{1}{35}$ = 36 SPACES
OFF./LOUNGE
180 SF @ $\frac{1}{35}$ = 5 SPACES
OFFICE
375SF @ $\frac{1}{250}$ = 1.5 SPACES

FIRST FLOOR TOTAL = 42 SPACES REQD.

B2– 2ND FLOOR

OFFICE
1919 SF @ $\frac{1}{250}$ = 8 SPACES
OFF./LOUNGE
1855 SF @ $\frac{1}{50}$ = 37 SPACES

2ND FLOOR TOTAL = 45 SPACES REQD.

3. BLDG. C –(NO WORK IN THIS BLDG)

TYPE: VB
OCC: B
ALLOWABLE AREA CALC.
BASIC ALLOWABLE AREA: 9,000 SF

FIRST FLOOR: 1,694 SF
2ND FLOOR: 1,335 SF
TOTAL ACTUAL AREA: 3,229 SF.

4. LIBRARY BLDG. (NO WORK IN THIS BLDG).

SHARED PARKING SPACES PROVIDED: 26

BICYCLE PARKING SPACES PROVIDED 16

NOTES:

–LIBRARY PARKING TO BE SHARE WITH THE CHURCH
–ALL PARKING IS EXISTING.
–CHURCH ATTENDANTS 10–15% WALK TO CHURCH
–NEAR BUS STOP.

CONSTRUCTION NOTES

1. (E) PARKING, DRIVEWAY & PLAZA AREAS
2. (E) PARKING & DRIVEWAY @ ADJACENT LOT.
3. (E) DIRECTIONAL ARROW – SEE SITE PLAN
4. (E) CHURCH BLDG. (BUILDING "A") 5,945.00 S.F.
5. (E) PARISH HALL BUILDING (BUILDING "B") 5,945.00 S.F.
6. (N) ADDITION IN (BUILDING "B") 531.00 S.F. @ 1ST FLOOR
7. (N) ADDITION IN (BUILDING "B") 6,620.00 S.F. @ 2ND FLOOR
8. (E) RECTORY OFFICE BLDG. (BUILDING "C") 3,229 S.F.
9. ASSUMED PROPERTY LINE FOR DETERMININGEXT. WALL & OPENING PROTECTION
10. (E) 4" PAINTED WHITE LINE
11. 2 HOUR FIRE WALL SEPARATING BLDG. "A" FROM BLDG "B" (CONTINUE TO 2ND FLOOR)
12. (E) PLANTER AREA
13. (E) ADA PARKING SPACE
14. (N) SIGN OF CLEAN AIR VEHICLES – SEE 28/A6.3

ACCESSIBLE NOTES

1.) PATH OF TRAVEL INDICATED IS BARRIER FREE ACCESS WITHOUT ANY ABRUPT CHANGES EXCEEDING 1/2" AT 1:2 MAXIMUM SLOPE EXCEPT THAT LEVEL CHANGES DO NOT EXCEED 1/4" VERTICAL

2.) PATH OF TRAVEL SHALL BE SLIP RESISTANT WITH MAXIMUM CROSS SLOPE NOT TO EXCEED 2%

3.) NO PATH OF TRAVEL SLOPE SHALL EXCEED 5% UNLESS THEY ARE DESIGNATED AS RAMP.

4.) OPENINGS IN GRATING LOCATED IN SURFACE ON ANY PEDESTRIAN WAY IN PATH OF TRAVEL SHALL BE LIMITED TO 1/2" IN THE DIRECTION OF TRAVEL FLOW

5.) CONTRACTOR TO VERIFY THAT ALL BARRIERS IN PATH OF TRAVEL HAVE BEEN REMOVED OR WILL BE REMOVED UNDER THIS PROJECT AND PATH OF TRAVEL COMPLIES WITH 2016 CBC.

ACCESIBLE PATH OF TRAVEL

CONSTRUCTION NOTES

DURING WINTER OPERATIONS (BETWEEN OCTOBER 15 AND APRIL 15), THE FOLLOWING MEASURES MUST BE TAKEN:

1.) DISTURBED SURFACES NOT INVOLVED IN THE IMMEDIATE OPERATIONS MUST BE PROTECTED BY MULCHING AND/OR OTHER EFFECTIVE MEANS OF SOIL PROTECTION

2.) ALL ROADS AND DRIVEWAYS SHALL HAVE DRAINAGE FACILITIES SUFFICIENT TO PREVENT EROSION ON OR ADJACENT TO THE ROADWAY OR ON THE DOWNHILL PROPERTIES

3.) RUNOFF FROM THE SITE SHALL BE DETAINED OF FILTERED BY BERMS, VEGETATED FILTER STRIPS, AND/OR CATCH BASINS TO PREVENT THE ESCAPE OF SEDIMENT FROM THE SITE

4.) DRAINAGE CONTROL MEASURES SHALL BE MAINTAINED AND IN PLACE AT THE END OF EACH DAY AND CONTINUOUSY THROUGHOUT THE LIFE OF THE PROJECT DURING WINTER OPERATIONS. (MONTEREY COUNTRY GRADING/EROSION ORD. 2806 16.12.09

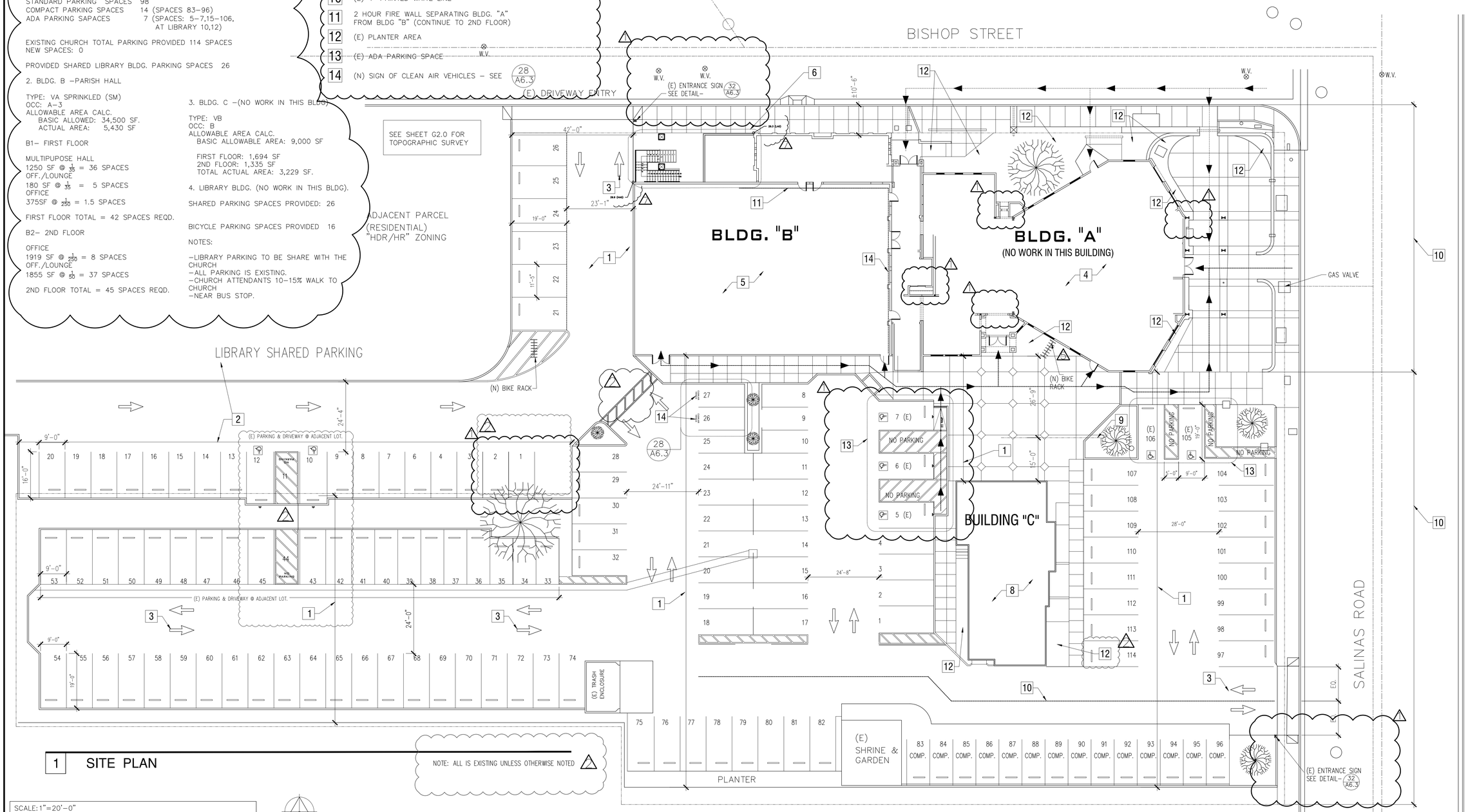

1 SITE PLAN

NOTE: ALL IS EXISTING UNLESS OTHERWISE NOTED

SCALE: 1"=20'–0"
UPDATE: 03/26/20

MUNOZ and ASSOCIATES ARCHITECTS
230 Capitol Street
Salinas, Ca. 93901
salvador@munozandassociatesarchitects.com
www.amunozarchitects.com
(831)320-0498

COPYRIGHT NOTICE

REGISTERED PROFESSIONAL ARCHITECT SALVADOR F. MUNOZ CA.18898 EXP. 11–30–2025 USA

JOB NUMBER
JOB_NUMBER

REV	DATE
1	06-01-21
2	09-23-2021
3	02-28-2022
4	09-20-2022
5	10-03-2022
6	01-27-2023
A	12-4-2024 FP. REVISION

APN
APN

OWNER_NAME
ASSUMPTION CHURCH

ADDRESS
CITY_STATE_&_ZIPCODE
PHONE

SHEET TITLE
SHEET_TITLE

SHEET NUMBER
A1.1

DATE: 12-4-2024

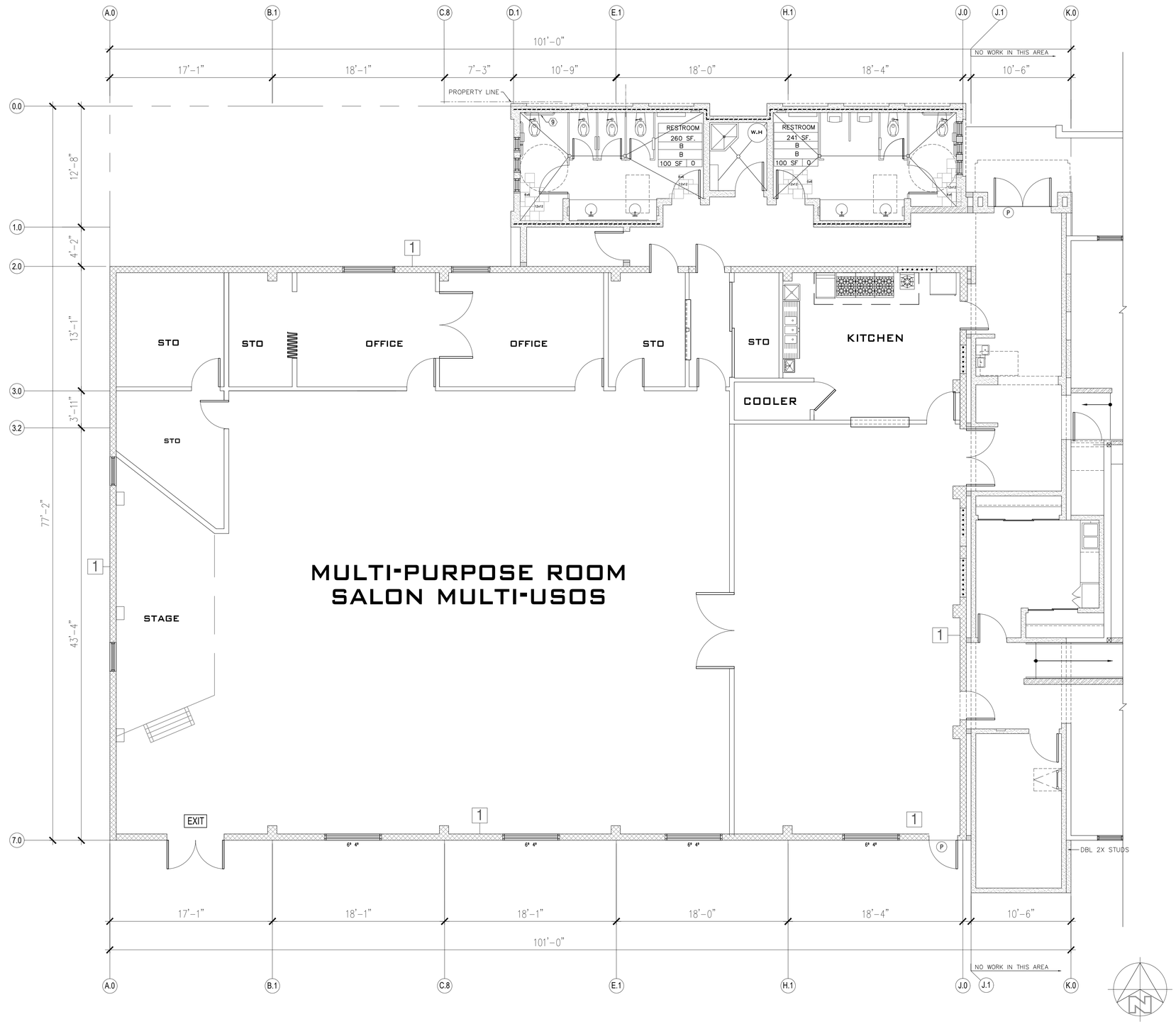

1 EXISTING FLOOR PLAN

SCALE: 3/16" = 1'-0"

GENERAL NOTES

1.) ALL FAUCET CONTROLS SHOULD BE OPERABLE WITH HAND AND NOT REQUIRE TIGHT GRASP.

LEGEND

- (P) PANIC HARDWARE
- (E) 2x6 4'-0" HIGH WALL -SEE
- (E) 2x WOOD FRAMED WALL TO REMAIN
- (E) 8" CMU WALL TO REMAIN
- INDICATES (E) 8" CMU WALL USED FOR 2 HOUR FIRE RATED FIRE WALL.
- (E) 2 HOUR FIRE RATED INFILL WALL @ (E) WALL OPENING –
- (E) 1 HOUR FIRE RATED WALL (SUPPORTS 1 HOUR ROOF ASSEMBLY)
- (E) 1 HOUR FIRE RATED WALL W/ 2x4 STUDS (INTERIOR WALL SUPPORTING 1 HOUR ROOF
- (E) 2x6 STUD WALL

KEYNOTES

1 EXTERIOR CMU WALL TO BE REMOVED. SEE DEMO PLAN A2.2

GWB FINISH NOTES

1.) SEE DEMO PLAN TO IDENTIFY ADDITIONAL GWB THAT NEEDS TO BE REPLACE

NOTE:
REMODEL OF THE EXISTING COMMUNITY HALL W/A SECOND FLOOR ADDITION AND HVAC TO (E) BLDG "A". EXCEPT FOR PERIMETER,WALL OPENINGS ADJACENT TO (N) ADDITIONS & MECHANICAL REPAIR AS INDICATED ON MECH. DWGS.& (N) PARTITION & DOOR @ EXIT HALL

MUNOZ and ASSOCIATES ARCHITECTS
230 Capitol Street
Salinas, Ca. 93901
salvador@munozandassociatesarchitects.com
www.munozandassociatesarchitects.com
(831)320-0498

COPYRIGHT NOTICE

REGISTERED PROFESSIONAL ARCHITECT
SALVADOR F. MUNOZ
CA.18898
EXP. 11-30-2025
CALIFORNIA

JOB NUMBER
002-2018

REV	DATE	DESCRIPTION
1	06-01-21	REVISION
2	09-23-2021	REVISION
3	12-4-2024	FLOODPROOF REVISION

APN
117-323-011-000

OUR LADY OF ASSUMPTION CHURCH
100 SALINAS ROAD
(PAJARO) WATSONVILLE, CA 95076

SHEET TITLE
EXISTING FLOOR PLAN

SHEET NUMBER
A 2.1

DATE: 12-4-2024

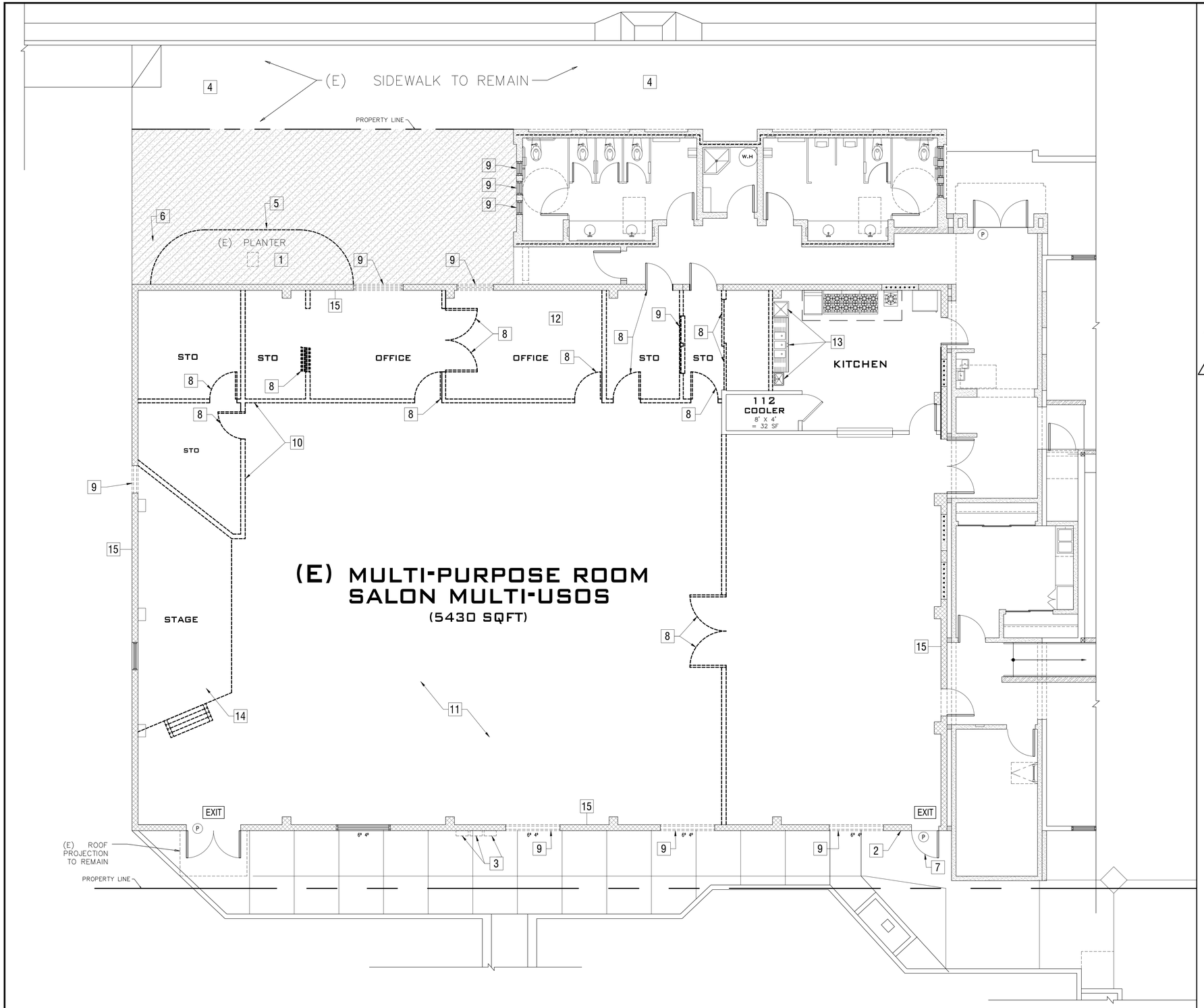

1 DEMOLITION FLOOR PLAN

SCALE: 3/16" = 1'-0"

DEMOLITION NOTES

1. REMOVE (E) PLANTS @ PLANTER AREAS.
2. REMOVE (E) PLASTER FINISH @ (E) EXT. WALL–REMOVE (E) EXT. WINDOWS, (E) GYP. BOARD FINISHES & (E) WALL FRAMING AS REQD. TO INSTALL (N) WINDOWS AND (N) FURRED WALL FRAMING (WHERE OCCURS)
3. REMOVE (E) ACCESS PANEL & LOUVER @ WALL – REMOVE & REPLACE (E) ELEC. PANEL @ (E) NICHE – SEE ELEC. DWGS
4. (E) CURB RAMP & SIDEWALK TO REMAIN.
5. REMOVE (E) PLANTS @ PLANTER ONLY AS REQD. TO INSTALL (N) CONC. WALKWAY
6. REMOVE (E)CONC. SLABS AS REQD. FOR (N) BLDG. ADDITIONS, (N) EXTERIOR CONC. WALKS & (N) PLANTERS AS OCCURS.
7. REMOVE (E) DOOR, THRESHOLD & FRAME AS REQD. TO INSTALL (N) DOOR & FRAME
8. REMOVE (E) DOOR & FRAME
9. REMOVE (E) WINDOW
10. REMOVE PORTIONS OF (E) INTERIOR WALLS AS REQD. TO INSTALL (N) WALL OPENINGS & SUPPORT FRAMING – SEE STRUCT. DWGS. & PROPOSED FLOOR PLAN.
11. REMOVE (E) CLG. FINISHES AS REQD. TO INSTALL (N) FURRED SOFFIT ALONG (E) BEAM LINES & FOR (N) LIGHT FIXTURES
12. REMOVE CARPET & DRYWALL FROM WALLS & CEILING
13. REMOVE (E) 3-COMP. SINK, HAND SINK & PREP. SINK & RELOCATE IN (N) LOCATION – SEE SHEET A-2.3
14. REMOVE PART OF (E) STAGE AS REQD.– SEE PROPOSED FLOOR PLAN
15. REMOVE (E) EXTERIOR CMU WALL AS PER PLAN

NOTE "A":

THE OWNER SHALL BE RESPONSIBLE FOR REMOVING, RELOCATING & STORING (E) FURNITURE. THE CONTRACTOR SHALL COORDINATE SCHEDULING FOR DEMOLITION WITH THE OWNER IN ADVANCE OF THE WORK IN ORDER TO ALLOW SUFFICIENT TIME FOR THE OWNER TO MOVE THE FURNITURE

LEGEND

- (P) PANIC HARDWARE
- CONC. TO BE REMOVED
- (E) 2x6 WOOD FRAMED WALL TO REMOVE
- CMU WALL TO BE REMOVED

MUNOZ and ASSOCIATES ARCHITECTS
230 Capitol Street
Salinas, Ca. 93901
salvador@munozandassociates.com
www.munozarchitects.com
(831)320-0498

COPYRIGHT NOTICE

REGISTERED PROFESSIONAL ARCHITECT
SALVADOR F. MUNOZ
CA.18898
EXP. 11-30-2025
CALIFORNIA, USA

JOB NUMBER
002-2018

REV	DATE	DESCRIPTION
1	06-01-21	REVISION
2	09-23-2021	REVISION
3	12-11-2024	FLOODPROOF REVISION

APN
117-323-011-000

OUR LADY OF ASSUMPTION CHURCH

100 SALINAS ROAD
(PAJARO) WATSONVILLE, CA 95076

SHEET TITLE
DEMOLITION FLOOR PLAN

SHEET NUMBER
A 2.2

DATE: 12-11-2024

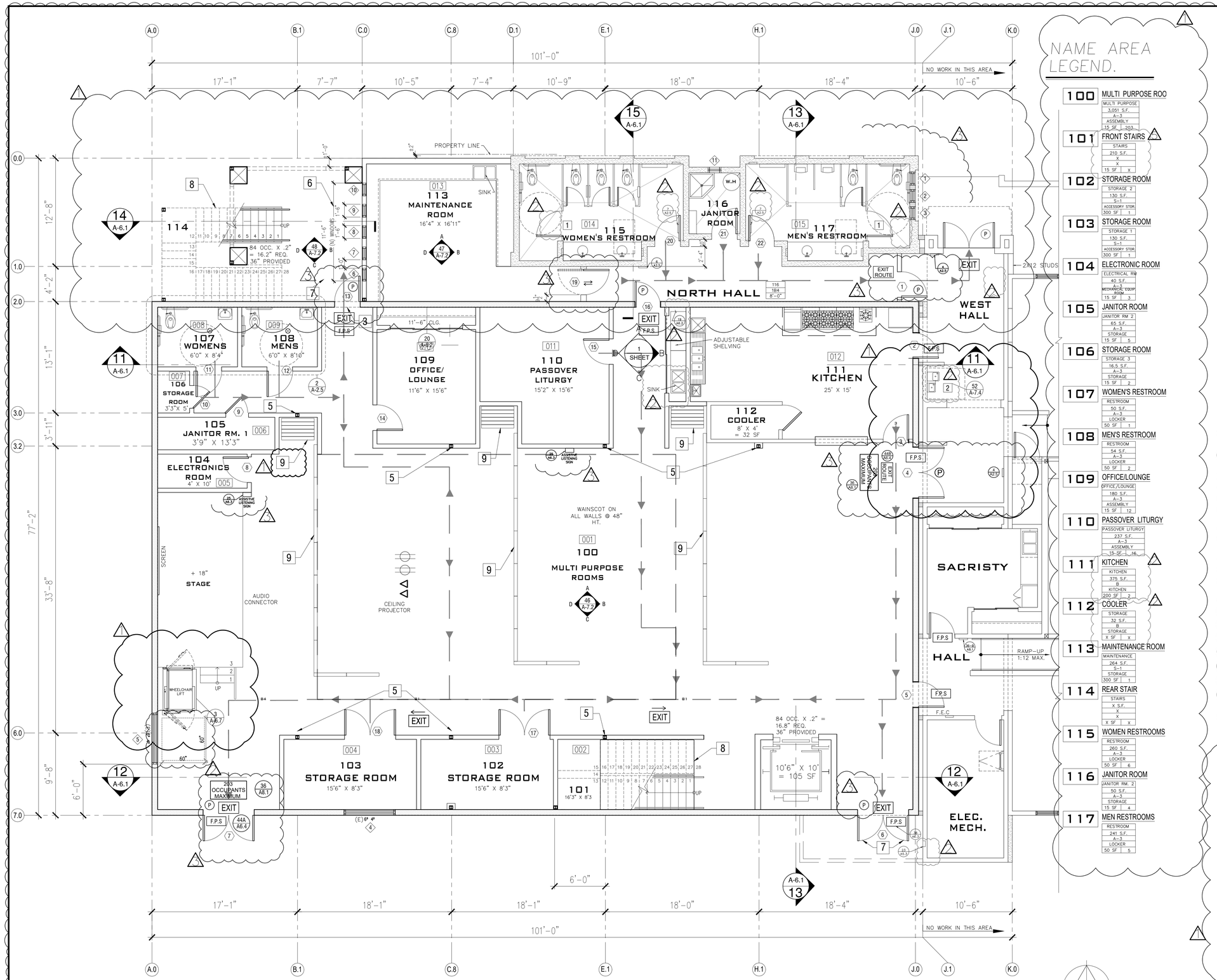

1 NEW LOWER FLOOR PLAN

SCALE: 3/16" = 1'-0"

NOTE:
NO WORK @ BLDG. "A" EXCEPT FOR PERIMETER WALL OPENINGS ADJACENT TO (N) ADDITIONS & MECHANICAL REPAIR AS INDICATED ON MECH. DWGS.& (N) PARTITION & DOOR @ EXIT HALL.

NAME AREA LEGEND.

100	MULTI PURPOSE ROO	MULTI PURPOSE, 3,051 S.F., A-3, ASSEMBLY, 15 SF, 203
101	FRONT STAIRS	STAIRS, 210 S.F., X, X, 15 SF, X
102	STORAGE ROOM	STORAGE 2, 130 S.F., S-1, ACCESSORY STOR., 300 SF, 1
103	STORAGE ROOM	STORAGE 1, 130 S.F., S-1, ACCESSORY STOR., 300 SF, 1
104	ELECTRONIC ROOM	ELECTRICAL RM, 40 S.F., X, MECHANICAL EQUIP ROOM, 15 SF, 3
105	JANITOR ROOM	JANITOR RM 2, 65 S.F., A-3, STORAGE, 15 SF, 5
106	STORAGE ROOM	STORAGE 3, 16.5 S.F., A-3, STORAGE, 15 SF, 2
107	WOMEN'S RESTROOM	RESTROOM, 50 S.F., A-3, LOCKER, 50 SF, 1
108	MEN'S RESTROOM	RESTROOM, 54 S.F., A-3, LOCKER, 50 SF, 2
109	OFFICE/LOUNGE	OFFICE/LOUNGE, 180 S.F., A-3, ASSEMBLY, 15 SF, 12
110	PASSOVER LITURGY	PASSOVER LITURGY, 237 S.F., A-3, ASSEMBLY, 15 SF, 16
111	KITCHEN	KITCHEN, 375 S.F., B, KITCHEN, 200 SF, 2
112	COOLER	STORAGE, 32 S.F., B, STORAGE, X SF, X
113	MAINTENANCE ROOM	MAINTENANCE, 264 S.F., S-1, STORAGE, 300 SF, 1
114	REAR STAIR	STAIRS, X S.F., X, X, X SF, X
115	WOMEN RESTROOMS	RESTROOM, 260 S.F., A-3, LOCKER, 50 SF, 6
116	JANITOR ROOM	JANITOR RM. 2, 50 S.F., A-3, STORAGE, 15 SF, 4
117	MEN RESTROOMS	RESTROOM, 241 S.F., A-3, LOCKER, 50 SF, 5

CONSTRUCTION NOTES

1. PROVIDE AUTOMATIC CLOSER FOR ACCESSIBLE PARTITION STALL.
2. ACCESSIBLE DRINKING FOUNTAINS
3. (N) OPENING IN (E) WALL
4. CLOSE / REMOVE (E) WINDOW
5. (N) COLUMNS –SEE STRUCT. DWGS. (21 / A-6.2)
6. (N) WINDOWS
7. (N) DOORS
8. (N) STAIRWAY – SEE A-6.5
9. (N) FOLDING WALL PARTITION SEE 10 & 11/A9.4

GENERAL NOTES:

1.) ALL FAUCET CONTROLS SHOULD BE OPERABLE WITH HAND AND NOT REQUIRE TIGHT GRASP.

LEGEND

- (P) PANIC HARDWARE
- (N) 2x6 4'-0" HIGH WALL
- (N) 2"x8" STUD WALL 1-HR STUD (2-HR)
- INDICATES (E) 8" CMU WALL USED FOR 2 HOUR FIRE RATED FIRE WALL BETWEEN BLDG. "A" AND BLDG. "B"
- F.P.S (N) FLOOD PROOF SYSTEM @ ENTRIES – SEE SPECS.

FLOODPROOF NOTES:

1.) INSTALL FLOOD-PROOFING SYSTEMS AS PER MANUFACTURER SPECIFICATIONS. SEE DET. 38/A6.3

2) FLOOD PANEL SUPER FLOOD LOG SYSTEM BY FLOODPROOFING. INC.

GWB FINISH NOTES

1.) SEE DEMO PLAN TO IDENTIFY ADDITIONAL GWB THAT NEEDS TO BE REPLACE

ROOM FINISH SCHEDULE

RM.#	ROOM NAME	FLOOR	BASE	WALLS A	WALLS B	WALLS C	WALLS D	CEILING	FIN. HT.	COMMENTS
001	MULTIPURPOSE ROOM	F-3	B-3	W-4	W-4	W-4	W-4	C-4	VARIES	
002	STAIRS	F-2	B-1	W-4	W-4	W-4	W-4	C-4	VARIES	
003	STORAGE ROOM	F-2	B-1	W-4	W-4	W-4	W-4	C-4	VARIES	
004	STORAGE ROOM	F-2	B-1	W-4	W-4	W-4	W-4	C-4	VARIES	
005	ELECTRONICS ROOM	F-2	B-1	W-4	W-4	W-4	W-4	C-2	VARIES	
006	JANITOR ROOM 1	F-2	B-1	W-4	W-4	W-4	W-4	C-2	VARIES	**
007	STORAGE ROOM	F-2	B-1	W-4	W-4	W-4	W-4	C-2	VARIES	
008	WOMEN TOILET	F-2	B-2	W-4	W-4	W-4	W-4	C-2	VARIES	**
009	MEN TOILET	F-2	B-2	W-4	W-4	W-4	W-4	C-2	VARIES	**
010	OFFICE LOUNGE	F-2	B-1	W-4	W-4	W-4	W-4	C-4	VARIES	
011	PASSOVER LITURGY	F-2	B-1	W-4	W-4	W-4	W-4	C-4	VARIES	
012	KITHEN	F-2	B-1	W-4	W-4	W-4	W-4	C-2	VARIES	
013	MAINTENANCE ROOM	F-2	B-1	W-4	W-4	W-4	W-4	C-4	VARIES	
014	WOMEN'S RESTROOM	F-2	B-2	W-4	W-4	W-4	W-4	C-2	VARIES	NO WORK
015	MEN'S RESTROOM	F-2	B-2	W-4	W-4	W-4	W-4	C-2	VARIES	NO WORK

FINISHES / NOTES

FLOOR
- F-1 PERGO LAMINATE FLOOR
- F-2 TILE
- F-3 CARPET & PAD
- F-4 EXPOSED CONC.

BASE
- B-1 6" WOOD BASE MATCH (SEMI-GL.)
- B-2 5" TILE BASE
- B-3 4" RUBBER BASE

WALLS
- W-1 NOT USED
- W-2 1/2" GYP. BD. W/TAPED & TEXTURED
- W-3 NOT USED
- W-4 5/8" TYPE 'X' GYP. BD. W/ TAPED

CEILING
- C-1 1/2" GYP. BD. W/TAPED & TEXTURED (FLAT LATEX)
- C-2 1/2" GYP. BD. W/TAPED & TEXTURED (SEMI-GLOSS)
- C-3 5/8" TYPE 'X' GYP. BD. W/ TAPED
- C-4 SUSPENDED CEILING

NOTES:
- * PROVIDE 1/2" W.R. TYPE GYP. BD. BEHIND ALL SINKS, LAVS, TUBS, SHOWERS & WATER
- ** W/ 48 INCHES HIGH FRP

EGRESS ANALYSIS

PER 2016 CBC TABLE 1004 1.2 FUNCTION OF SPACE	OCCUPANT LOAD FACTOR	MAX. OCCUPANCY
MULTI PURPOSE ROOM	15	203
FRONT STAIRS	X	X
STORAGE ROOM 1	300	1
STORAGE ROOM 2	300	1
ELECTRONIC ROOM	15	3
JANITOR ROOM	15	5
STORAGE ROOM 3	15	2
WOMEN'S RESTROOM	50	1
MEN'S RESTROOM	50	2
OFFICE / LOUNGE	15	12
PASSOVER LITURGY	15	16
KITCHEN	200	2
COOLER	15	3
MAINTENANCE ROOM	300	1
REAR STAIR	X	X
WOMEN'S RESTROOM	50	6
JANITOR ROOM	15	4
MEN'S RESTROOMS	50	5
TOTAL OCCUPANT LOAD		290

TOTAL NUMBER OF EGRESS OCCUPANTS IN AREA OF WORK = 290 OCCUPANTS

2 EXITS REQUIRED, 3 EXITS PROVIDED

STAIRS/CORRIDORS WIDTH REQUIREMENTS: 290 OCC.(.3") = 87.0"/2 = 43.5"

NOTE:
- ALL INTERIOR WALL @ MULTI-PURPOSE ROOM SHALL
- HAVE WAINSCOTING UP 48" HIGH.
- VCT/EPOXY FLOORING @ TYP.
- PROVIDE BULLETIN BOARDS.
- PROVIDE CEILING HOOKS/ BRACKETS TO HANG BANNERS.

ROOM NAME
ROOM AREA
OCCUPANCY GROUP
FUNCTION OF SPACE PER CBC 1004 1.2
FLOOR AREA PER OCCUPANT PER CBC TABLE 1004 1.2 / OCCUPANT LOAD

MUNOZ and ASSOCIATES ARCHITECTS
230 Capitol Street
Salinas, Ca. 93901
e-mail: salvador@munozarchitects.com
www.munozarchitects.com
(831)320-0498

COPYRIGHT NOTICE
REGISTERED PROFESSIONAL ARCHITECT SALVADOR F. MUNOZ CA.18898 EXP. 11-30-2025 CALIFORNIA

JOB NUMBER
002-2018

REV	DATE	DESCRIPTION
1	06-01-21	REVISION
2	09-23-2021	REVISION
3	12-07-2021	REVISION
4	05-06-2022	REVISION
5	12-4-2024	FLOODPROOF REVISION
6		

APN
117-323-011-000

OUR LADY OF ASSUMPTION CHURCH
100 SALINAS ROAD
(PAJARO) WATSONVILLE, CA 95076

SHEET TITLE
NEW LOWER FLOOR PLAN

SHEET NUMBER
A 2.3

DATE: 12-4-2024

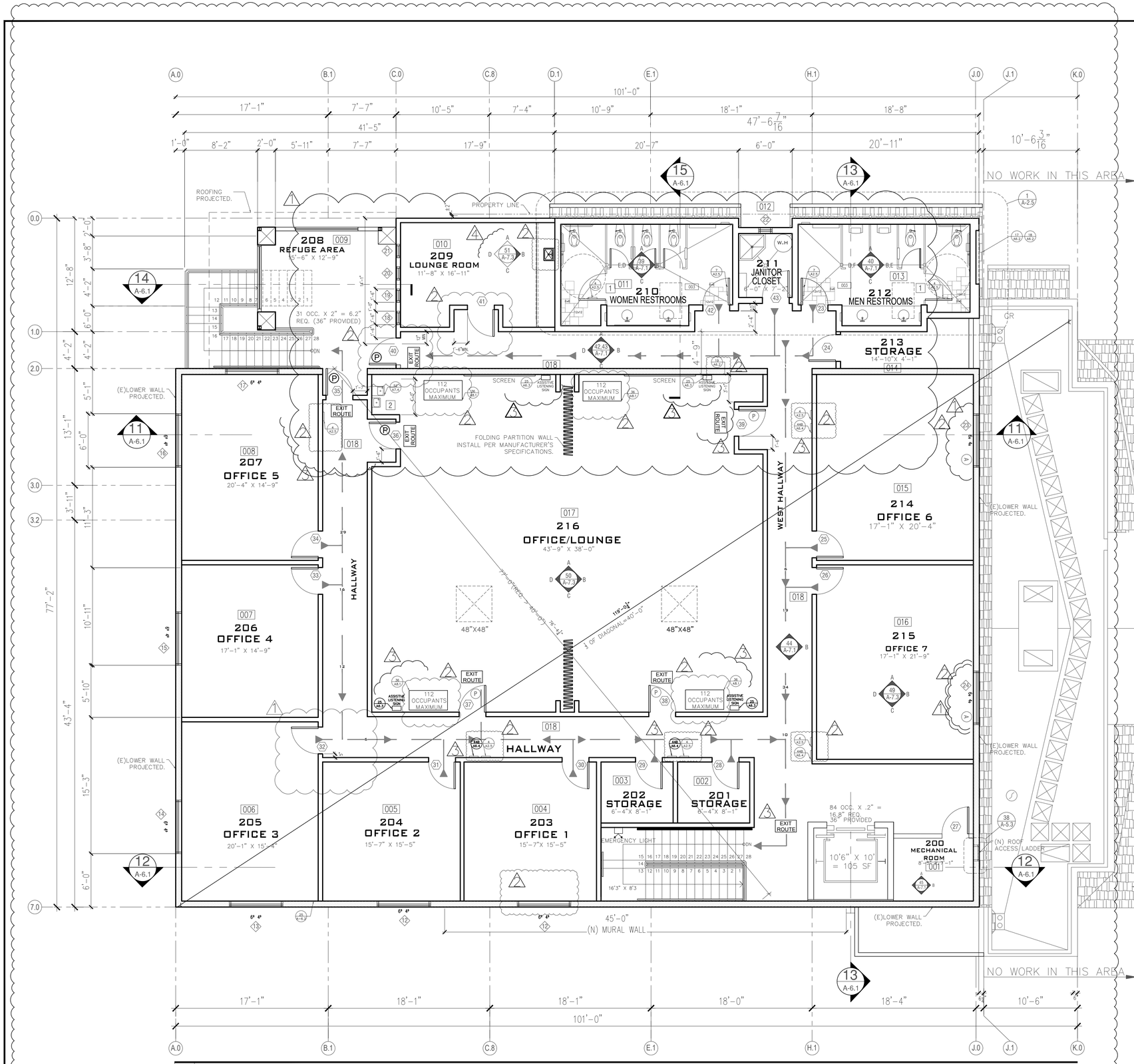

1 NEW UPPER FLOOR PLAN

SCALE: 3/16" = 1'-0"

NOTE:
NO WORK @ BLDG. "A" EXCEPT FOR PERIMETER WALL OPENINGS ADJACENT TO (N) ADDITIONS & MECHANICAL REPAIR AS INDICATED ON MECH. DWGS.& (N) PARTITION & DOOR @ EXIT HALL.

NAME AREA LEGEND

200	MECHANICAL ROOM	MECANICAL 1, 54 S.F., S-1
		MERCH-STORE, 300 SF, 1
201	STORAGE	SORAGE 1, 44 S.F., B
		STORAGE, 100 SF, 1
202	STORAGE	STORAGE 2, 55 S.F., B
		STORAGE, 100 SF, 1
203	OFFICE 1	OFFICE, 243 S.F., B
		BUSINESS, 100 SF, 3
204	OFFICE 2	OFFICE, 243 S.F., B
		BUSINESS, 100 SF, 3
205	OFFICE 3	OFFICE, 309 S.F., B
		BUSINESS, 100 SF, 4
206	OFFICE 4	OFFICE, 251 S.F., B
		BUSINESS, 100 SF, 4
207	OFFICE 5	OFFICE, 334 S.F., B
		BUSINESS, 100 SF, 3
208	REFUGE AREA	REFUGE AREA, 198 S.F., x
		x, 100 SF, X
209	LOUNGE ROOM	ASSEMBLY, 188 S.F., A-3
		ASSEMBLY, 15 SF, 13
210	WOMEN RESTROOM	RESTROOM, 260 S.F., B
		LOCKER, 100 SF, 2.5
211	JANITOR CLOSET	JANITOR RM.2, 60 S.F., B
		STORAGE, 100 SF, 1
212	MEN RESTROOM	RESTROOM, 240 S.F., B
		LOCKER, 100 SF, 2.5
213	STORAGE	STORAGE 3, 57 S.F., B
		STORAGE, 100 SF, 1
214	OFFICE 6	OFFICE, 385 S.F., B
		BUSINESS, 100 SF, 4
215	OFFICE 7	OFFICE, 354 S.F., B
		BUSINESS, 100 SF, 4
216	OFFICE/LOUNGE	OFFICE/LOUNGE, 1668 S.F., A-3
		ASSEMBLY, 15 SF, 112

CONSTRUCTION NOTES

1. PROVIDE AUTOMATIC CLOSER FOR ACCESSIBLE PARTITION STALL.
2. DRINKING FOUNTAIN.
P. PANIC HARDWARE – SEE DETAIL

GENERAL NOTES:

1.) ALL FAUCET CONTROLS SHOULD BE OPERABLE WITH HAND AND NOT REQUIRE TIGHT GRASP.

LEGEND:

- (N) 2x6 4'-0" HIGH WALL –SEE
- (N) 2"x8" STUD WALL 1–HR STUD (2–HR)
- INDICATES (E) 8" CMU WALL USED FOR 2 HOUR FIRE RATED FIRE WALL BETWEEN BLDG. "A" AND BLDG. "B"
- (N) 2 HOUR FIRE RATED INFILL WALL @ (E) WALL OPENING – SEE DTL. 26/A-9.3 & 36/A-9.3

GWB FINISH NOTES

1.) SEE DEMO PLAN TO IDENTIFY ADDITIONAL GWB THAT NEEDS TO BE REPLACE (SEE A 2.2)
2.) SEE PREVIOUS SHEET

ROOM FINISH SCHEDULE

RM.#	ROOM NAME	FLOOR	BASE	WALLS A	B	C	D	CEILING	FIN. HT.	COMMENTS
001	MECHANICAL ROOM	F–2	B–1	W–4	W–4	W–4	W–4	C–2	VARIES	
002	STORAGE 1	F–2	B–1	W–4	W–4	W–4	W–4	C–2	VARIES	
003	STORAGE 2	F–2	B–1	W–4	W–4	W–4	W–4	C–2	VARIES	
004	OFFICE 1	F–2	B–3	W–4	W–4	W–4	W–4	C–4	VARIES	
005	OFFICE 2	F–2	B–3	W–4	W–4	W–4	W–4	C–4	VARIES	
006	OFFICE 3	F–2	B–3	W–4	W–4	W–4	W–4	C–4	VARIES	
007	OFFICE 4	F–2	B–3	W–4	W–4	W–4	W–4	C–4	VARIES	
008	OFFICE 5	F–2	B–3	W–4	W–4	W–4	W–4	C–4	VARIES	
009	REFUGE AREA	F–2	B–2	W–4	W–4	W–4	W–4	C–2	VARIES	
010	LOUNGE ROOM	F–2	B–3	W–4	W–4	W–4	W–4	C–2	VARIES	
011	WOMEN RESTROOMS	F–2	B–2	W–4	W–4	W–4	W–4	C–2	VARIES	**
012	JANITOR CLOSET	F–2	B–1	W–4	W–4	W–4	W–4	C–2	VARIES	
013	MEN RESTROOMS	F–2	B–2	W–4	W–4	W–4	W–4	C–2	VARIES	**
014	STORAGE 3	F–2	B–1	W–4	W–4	W–4	W–4	C–2	VARIES	
015	OFFICE 6	F–2	B–3	W–4	W–4	W–4	W–4	C–4	VARIES	
016	OFFICE 7	F–2	B–3	W–4	W–4	W–4	W–4	C–4	VARIES	
017	OFFICE / LOUNGE	F–2	B–3	W–4	W–4	W–4	W–4	C–4	VARIES	
018	HALLWAY	F–2	B–3	W–4	W–4	W–4	W–4	C–4	VARIES	

FINISHES / NOTES

FLOOR
- F–1 PERGO LAMINATE FLOOR
- F–2 TILE
- F–3 CARPET & PAD
- F–4 EXPOSED CONC.
- F–5 SHEET VINYL

BASE
- B–1 6" WOOD BASE MATCH (SEMI–GL.)
- B–2 5" TILE BASE
- B–3 4" RUBBER BASE

WALLS
- W–1 NOT USED
- W–2 1/2" GYP. BD. W/TAPED & TEXTURED
- W–3 NOT USED
- W–4 5/8" TYPE 'X' GYP. BD. W/ TAPED

CEILING
- C–1 1/2" GYP. BD. W/TAPED & TEXTURED (FLAT LATEX)
- C–2 1/2" GYP. BD. W/TAPED & TEXTURED (SEMI–GLOSS)
- C–3 5/8" TYPE 'X' GYP. BD. W/ TAPED
- C–4 SUSPENDED CEILING

NOTES:
- * PROVIDE 1/2" W.R. TYPE GYP. BD. BEHIND ALL SINKS, LAVS, TUBS, SHOWERS & WATER
- ** W/ 48 INCHES FRP

EGRESS ANALYSIS

OCCUPANT LOAD CALCULATION

PER 2016 CBC TABLE 1004 1.2 FUNCTION OF SPACE	OCCUPANT LOAD FACTOR	OCCUPANT LOAD FACTOR
MECHANICAL ROOM	300	1
STORAGE 1	300	1
STORAGE 2	300	1
OFFICE 1	100	2.5
OFFICE 2	100	2.5
OFFICE 3	100	3.0
OFFICE 4	100	3.0
OFFICE 5	100	3.5
REFUGE AREA	X	X
LOUNGE ROOM	15	13
WOMEN RESTROOM	100	2.5
JANITOR CLOSET	300	1
MEN RESTROOM	100	2.5
STORAGE 3	300	1
OFFICE 6	100	4
OFFICE 7	100	4
OFFICE / LOUNGE	15	110.80
TOTAL OCCUPANT LOAD		156.3

EGRESS AND CORRIDOR WIDTH CALCULATION

TOTAL # OF EGRESS OCCUPANTS IN AREA OF WORK = 156.3 OCCUPANTS
2 EXITS REQUIRED, 3 EXITS PROVIDED
STAIRS/CORRIDORS WIDTH REQUIREMENTS:156.3
OCC.(.3") = 46.89"/2 =23.44"

NOTE

NOTE:
- ALL INTERIOR WALL @ MULTI–PURPOSE ROOM SHALL
- HAVE WAINSCOTING UP 48" HIGH.
- VCT/EPOXY FLOORING @ TYP.
- PROVIDE BULLETIN BOARDS.
- PROVIDE CEILING HOOKS/ BRACKETS TO HANG BANNERS.

ROOM NAME
ROOM AREA
OCCUPANCY GROUP
FUNCTION OF SPACE PER CBC 1004 1.2
FLOOR AREA PER OCCUPANT PER CBC TABLE 1004 1.2 / OCCUPANT LOAD

MUNOZ and ASSOCIATES ARCHITECTS
230 Capitol Street
Salinas, Ca. 93901
salvador@munozandassociatesarchitects.com
www.smunozarchitects.com
(831)320-0498

COPYRIGHT NOTICE

REGISTERED PROFESSIONAL ARCHITECT
SALVADOR F. MUNOZ
CA.18898
EXP. 11–30–2025
CALIFORNIA

JOB NUMBER
002-2018

REV	DATE	DESCRIPTION
1	06-01-21	REVISION
2	09-23-2021	REVISION
3	01-12-2022	REVISION
4	02-28-2022	REVISION
5	03-23-2022	REVISION
6	12-4-2024	FLOODPROOF REVISION

APN
117-323-011-000

OUR LADY OF ASSUMPTION CHURCH
100 SALINAS ROAD
(PAJARO) WATSONVILLE, CA 95076

SHEET TITLE
NEW UPPER FLOOR PLAN

SHEET NUMBER
A 2.4

DATE: 12-4-2024

NOTE:

NO WORK @ BLDG. "A" EXCEPT FOR PERIMETER WALL OPENINGS ADJACENT TO (N) ADDITIONS & MECHANICAL REPAIR AS INDICATED ON MECH. DWGS. & (N) PARTITION & DOOR @ EXIT HALL.

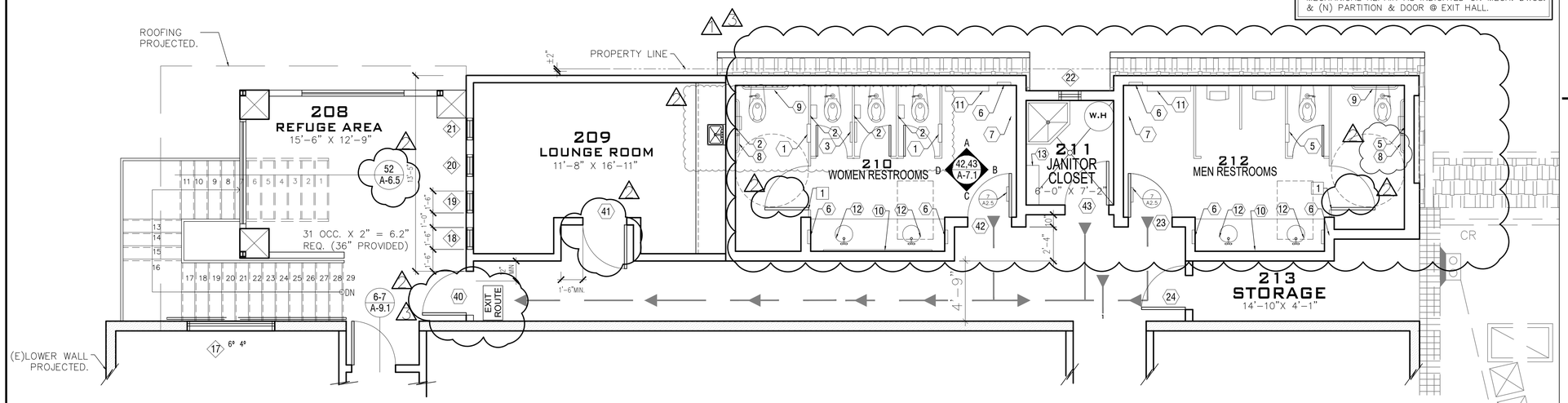

1 UPPER FLOOR PLAN –TOILET

SCALE: 1/4" = 1'-0"

TOILET ACCESSORY SCHEDULE

SYMBOL	DESCRIPTION	MODEL No.	MOUNTING: SURFACE	MOUNTING: SEMI RECESSED	MOUNTING: RECESSED	MOUNTING: HEIGHT	REMARKS
1	TOILET SEAT COVER DISPENSER	BOBRICK B-3474			●		ACCESSIBLE, SINGLE FACED, RECESSED INTO INTO STUD WALL
2	TOILET TISSUE WITH NAPKIN DISPOSAL "WOMENS"	BOBRICK B-3574			●		ACCESSIBLE, SINGLE FACED, RECESSED INTO STUD WALL
3	TOILET SEAT COVER DISPENSER AND TOILET TISSUE "WOMENS"	BOBRICK B-357		●			DOUBLE FACED PARTITION MTD.
4	TOILET SEAT COVER DISPENSER AND TOILET TISSUE "WOMENS"	BOBRICK B-3579	●				
5	TOILET SEAT COVER DISPENSER AND TOILET TISSUE "MENS"	BOBRICK B-3479	●				
6	RECESSED PAPER TOWEL DISPENSER	BOBRICK B-359			●		4" MIN RECESSED REQD.
7	FLOOR-STANDING OPEN TOP. WASTE RECEPTACLE	BOBRICK B-2250					
8	GRAB BAR 48"	BOBRICK B-6806X48	●				33" ADULT
9	GRAB BAR 36"	BOBRICK B-6806X36	●				33" ADULT
10	MIRROR W/FRAME 36 X 72	BOBRICK B-290	●				
11	BABY CHANGING STATION POLYETHELENE FOLD-DOWN	BOBRICK KB100-00	●				
12	TOP FILLING SOAP DISPENSER	BOBRICK B-822		●			
13	UTILITY SHELF WITH MOP/BROOM HOLDERS AND RAG HOOKS	BOBRICK B-224x36	●				

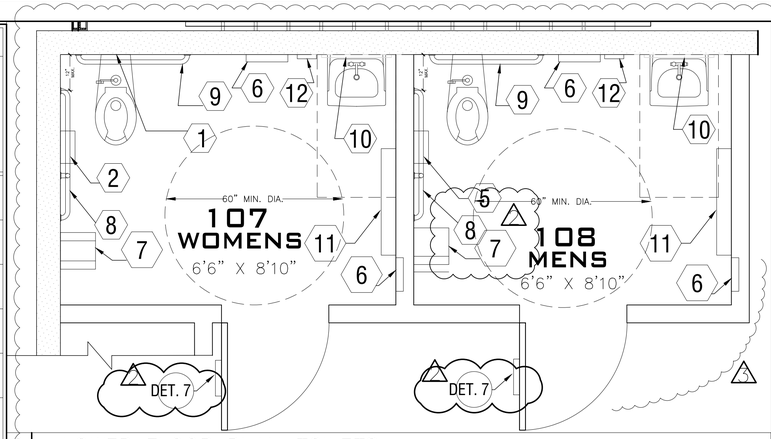

2 LOWER FLOOR PLAN TOILETS

SCALE : 1/2" = 1'-0"

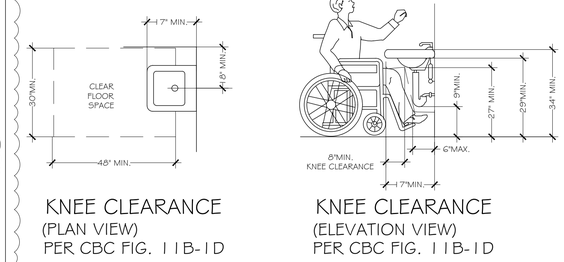

KNEE CLEARANCE (PLAN VIEW) PER CBC FIG. 11B-1D

KNEE CLEARANCE (ELEVATION VIEW) PER CBC FIG. 11B-1D

3 KNEE CLEARANCE

SCALE : N.T.S

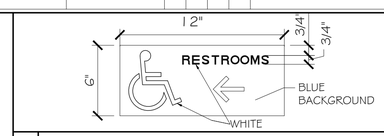

4 TOILET DIRECTIONAL SIGN

SCALE : N.T.S

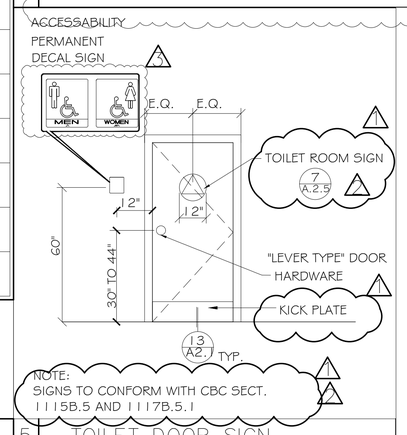

5 TOILET DOOR SIGN

SCALE : N.T.S

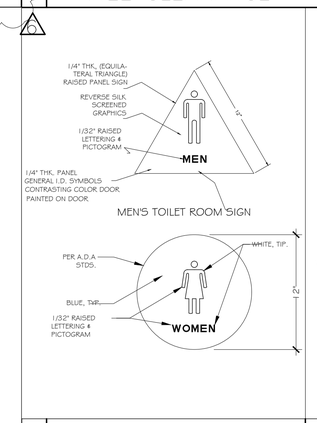

7 TOILET ROOM SIGN

SCALE : N.T.S

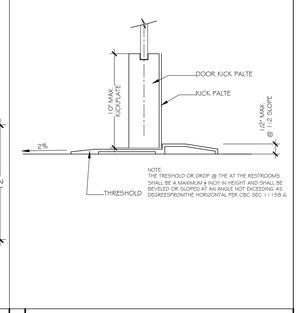

8 THRESHOLD DETAIL

SCALE : N.T.S

GWB FINISH NOTES

1.) SEE DEMO PLAN TO IDENTIFY ADDITIONAL GWB THAT NEEDS TO BE REPLACE

2.) FINISH GWB TO MATCH (E)

PAINTING NOTES

1.) PAINT GWB SEMIGLOSS

2.) PAINT ALL ROOMS IN (E) CHURCH

3.) (N) OAK TO RECIVE CLEAR FINISH

4.) EXTERIOR FLASHING & MTL. TO BE SEMIGLOSS

5.) STUCCO TO BE FLAT

INTERIOR FINISHES

	FLOOR / BASE
1	12"x12" SALTILLO TILE / 6"x12" QUARRY TILE
2	12"x12" QUARRY TILE / 6"x12" QUARRY TILE
3	SEALED CONCRETE / RUBBER BASE
4	12"x12" PORCELAIN TILE / 6" COVED WALL BASE
	NOTE: FINISH #2 ONLY OCCURS AT SANCTUARY, RAMP & STAIRS
	WALLS / FINISH
A	(E) GWB & (N) 5/8" GWB PAINT
B	(E) CMU & 5/8" LEVEL 5 FINISH/PAINT
C	(N) 5/8" GWB FINISH/PAINT
D	(N) 5/8" GWB FINISH & CERAMIC TILE/PAINT GWB
E	5/8" GWB LEVEL 3 FINISH/PAINT
F	VINYL O/ GWB
	CEILING / FINISH
1	(E) WOOD DECKING / PAINT
2	(E) GWB & (N) 5/8" GWB PAINT
3	(N) 5/8" GWB
4	2x4 SUSPENDED ACOUSTIC PANELS / NA
5	(N) 5/8" GWB LEVEL 3 FINISH/PAINT
	NOTE: GWB IS NEW UNLESS LABELED (E) SEE ALSO A-3.1 FOR EXTENT AND MINOR VARIATIONS

CONSTRUCTION NOTES

1 PROVIDE AUTOMATIC CLOSER FOR ACCESSIBLE PARTITION STALL.

FIXTURES CALCULATIONS

MINIMUM NUMBER OF PLUMBING FIXTURES REQUIRED PER CPC TABLE 422.1 AND OCC FACTOR. SEE EGRESS ANALYSIS SHEET A2.3

OCC 290

TYPE OF FIXTURE	FIXTURES REQ. PER OCC. FACTOR	FIXTURES PROVIDED	COMPILANT
WC-MEN	3	5	●
WC-WOMEN	6	9	●
URINAL	3	4	●
LAV. M/W	2M / 4W	5M / 5W	●
DRINK.F.	1	2	●

MUNOZ and ASSOCIATES ARCHITECTS
230 Capitol Street
Salinas, Ca. 93901
salvador@munozarchitects.com
www.munozarchitects.com
(831)320-0498

COPYRIGHT NOTICE

REGISTERED PROFESSIONAL ARCHITECT SALVADOR F. MUNOZ CA.18898 EXP. 11-30-2025 STATE OF CALIFORNIA

JOB NUMBER

002-2018

REV	DATE	DESCRIPTION
1	06-01-21	REVISION
2	09-23-2021	REVISION
3	12-07-2021	REVISION
4	12-4-2024	FLOODPROOF REVISION

APN

117-323-011-000

OUR LADY OF ASSUMPTION CHURCH

100 SALINAS ROAD

(PAJARO) WATSONVILLE, CA 95076

SHEET TITLE

TOILET ACCESSORY SCHEDULE

SHEET NUMBER

A 2.5

DATE: 12-4-2024

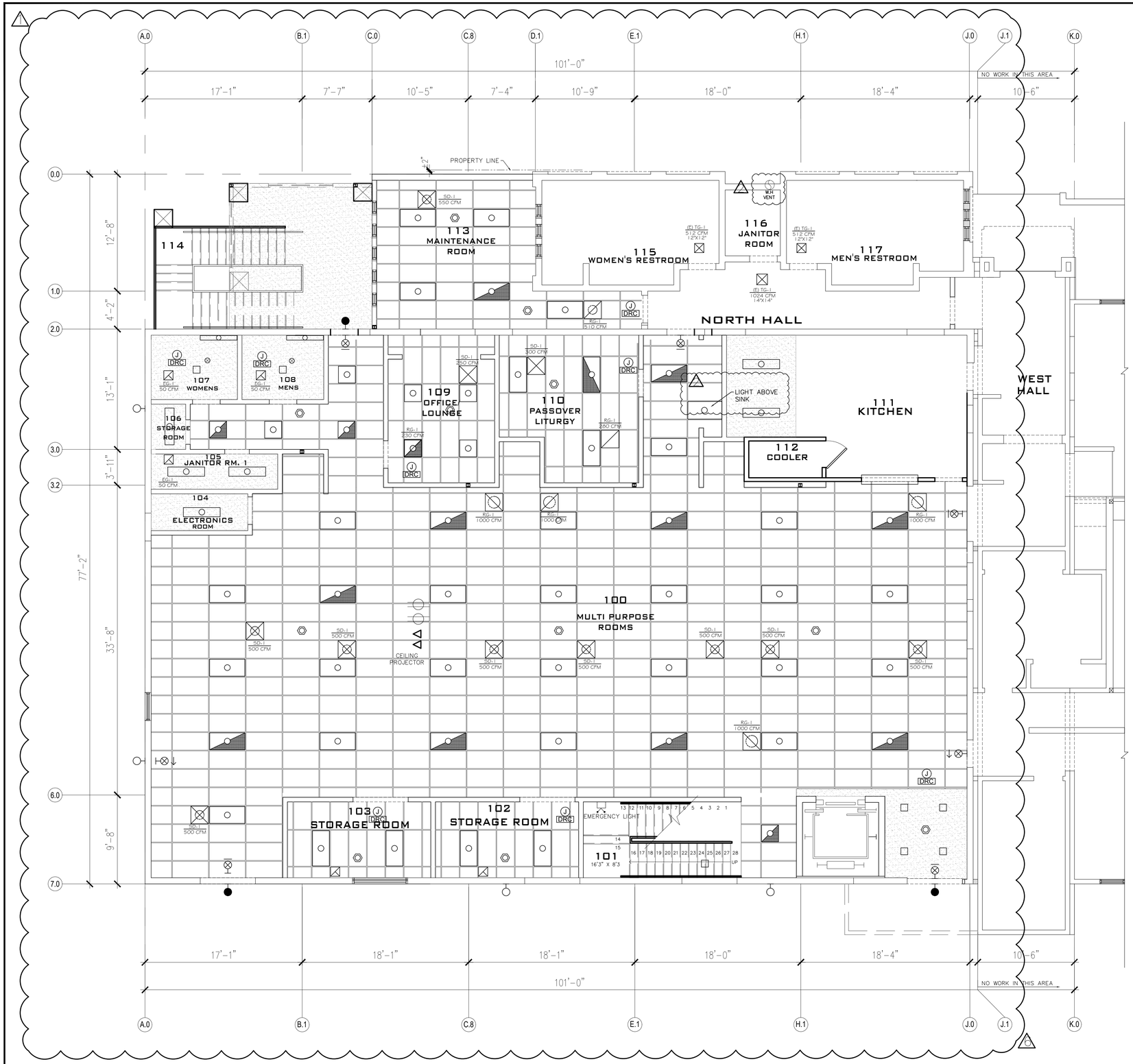

1 REFLECTED CEILING LOWER FLOOR PLAN

SCALE: 3/16" = 1'-0"

CEILING LEGEND

5/8" GYPSUM BOARD CEILING/SOFFIT

2x4 SUSPENDED ACOUSTICAL TILE

(E) GYP. BD. CEILING TO REMAIN

LIGHTING LEGEND

NOTE: SEE ELECTRICAL SYMBOLS E 0.1

- FLUORESCENT OR LED LUMINAIRE - SEE SCHEDULE
- EMERGENCY OR NIGHT LIGHT
- STRIP FLUORESCENT OR LED LUMINAIRE - SEE SCHEDULE
- LUMINAIRE - RECESSED - SEE SCHEDULE
- RECESSED WALL WASHER
- LUMINAIRE - SURFACE MOUNTED - SEE SCHEDULE
- LUMINAIRE - POLE OR POST MOUNTED - SEE SCHEDULE
- LUMINAIRE - WALL MOUNTED SEE SCHEDULE
- BOLLARD OR PATH LIGHT - SEE SCHEDULE
- EXIT LIGHT - DIRECTIONAL ARROWS AS INDICATED - SEE SCHEDULE
- TRACK LIGHTING - SEE SCHEDULE
- EMERGENCY LIGHT
- DIGITAL DUAL TECHNOLOGY OCC. SENSOR
- LIGHTING CONTROL OCCUPANCY SENSOR CORNER MOUNTED

MECHANICAL LEGEND

NOTE: SEE ALSO MECHANICAL PLANS M 0.1

- SUPPLY AIR DIFFUSER
- RETURN AIR GRILLE
- EXHAUST AIR GRILLE
- RETURN AIR GRILLE
- EXHAUST AIR GRILLE
- LARGE RETURN AIR GRILLE
- VENT THROUGH ROOF

DIMMER ROOM CONTROLER (J) DRC

MUNOZ and ASSOCIATES ARCHITECTS
230 Capitol Street
Salinas, Ca. 93901
salvador@munozandassociates.com
www.smunozarchitects.com
(831)320-0498

COPYRIGHT NOTICE

REGISTERED PROFESSIONAL ARCHITECT
SALVADOR F. MUNOZ
CA.18898
EXP. 11-30-2025
CALIFORNIA

JOB NUMBER
002-2018

REV	DATE	DESCRIPTION
1	06-01-21	REVISION
2	09-23-2021	REVISION
3	12-4-2024	FLOODPROOF REVISION

APN
117-323-011-000

OUR LADY OF ASSUMPTION CHURCH

100 SALINAS ROAD
(PAJARO) WATSONVILLE, CA 95076

SHEET TITLE
REFLECTED CEILING LOWER FLOOR PLAN

SHEET NUMBER
A 3.1

DATE: 12-4-2024

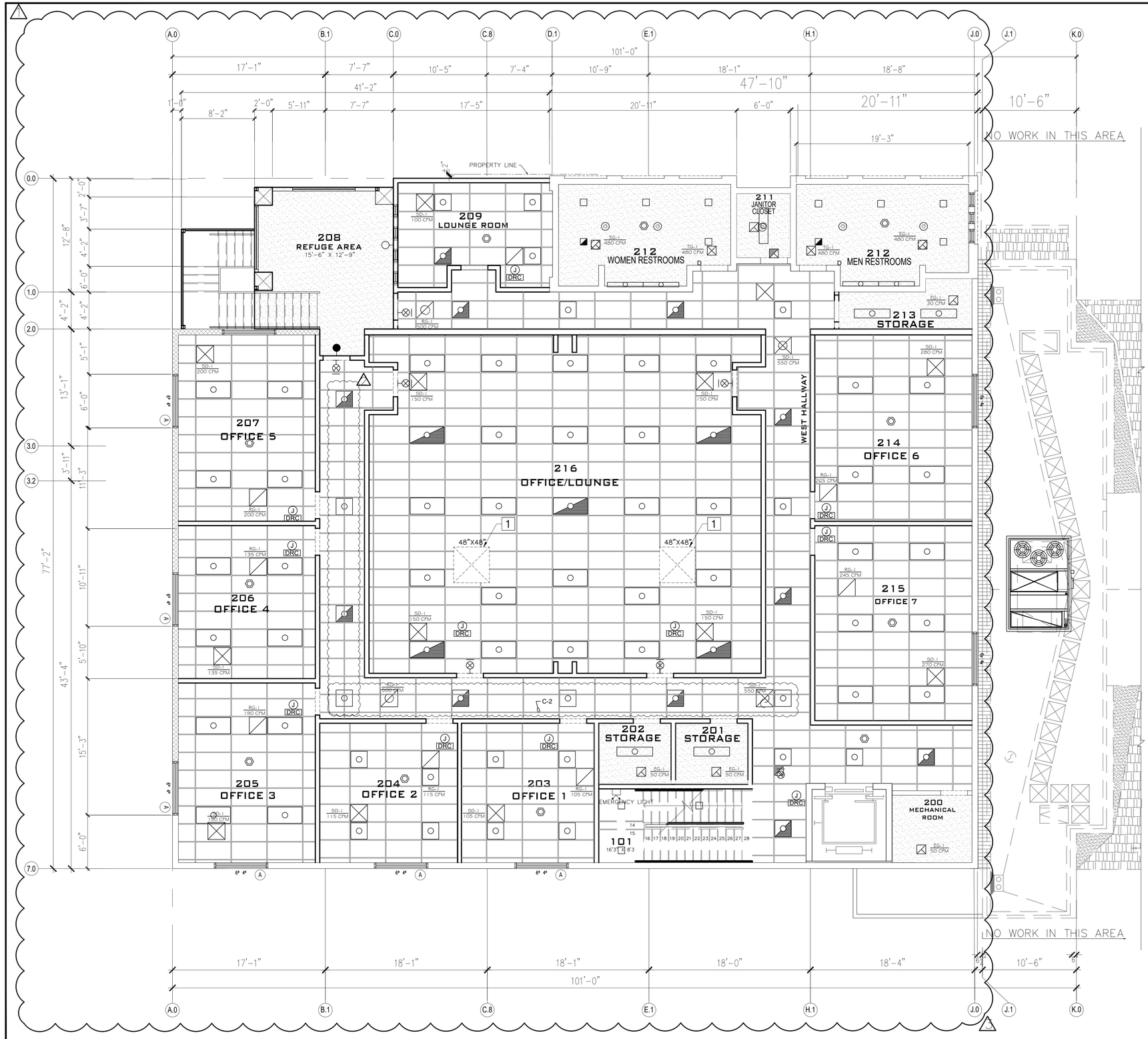

2 REFLECTED CEILING UPPER FLOOR PLAN

SCALE: 3/16" = 1'-0"

CEILING LEGEND

5/8" GYPSUM BOARD CEILING/SOFFIT

2x4 SUSPENDED ACOUSTICAL TILE

KEY NOTES

1 SKYLIGHT

LIGHTING LEGEND

NOTE: SEE ELECTRICAL SYMBOLS E 0.1

- FLUORESCENT OR LED LUMINAIRE - SEE SCHEDULE
- EMERGENCY OR NIGHT LIGHT
- STRIP FLUORESCENT OR LED LUMINAIRE - SEE SCHEDULE
- LUMINAIRE - RECESSED - SEE SCHEDULE
- RECESSED WALL WASHER
- LUMINAIRE - SURFACE MOUNTED - SEE SCHEDULE
- LUMINAIRE - POLE OR POST MOUNTED - SEE SCHEDULE
- LUMINAIRE - WALL MOUNTED SEE SCHEDULE
- BOLLARD OR PATH LIGHT - SEE SCHEDULE
- EXIT LIGHT - DIRECTIONAL ARROWS AS INDICATED - SEE SCHEDULE
- TRACK LIGHTING - SEE SCHEDULE
- EMERGENCY LIGHT
- DIGITAL DUAL TECHNOLOGY OCC. SENSOR
- LIGHTING CONTROL OCCUPANCY SENSOR CORNER MOUNTED

MECHANICAL LEGEND

NOTE: SEE MECHANICAL SYMBOLS M 0.1

- SUPPLY AIR DIFFUSER
- RETURN AIR GRILLE
- EXHAUST AIR GRILLE
- RETURN AIR GRILLE
- EXHAUST AIR GRILLE
- LARGE RETURN AIR GRILLE
- VENT THROUGH ROOF

DIMMER ROOM CONTROLER

MUNOZ and ASSOCIATES ARCHITECTS
230 Capitol Street
Salinas, Ca. 93901
(831)320-0488

COPYRIGHT NOTICE

REGISTERED PROFESSIONAL ARCHITECT
SALVADOR F. MUNOZ
CA.18898
EXP. 11-30-2025
CALIFORNIA

JOB NUMBER
002-2018

REV	DATE	DESCRIPTION
1	06-01-21	REVISION
2	09-23-2021	REVISION
3	12-4-2024	FLOODPROOF REVISION

APN
117-323-011-000

OUR LADY OF ASSUMPTION CHURCH

100 SALINAS ROAD
(PAJARO) WATSONVILLE, CA 95076

SHEET TITLE
REFLECTED CEILING UPPER FLOOR PLAN

SHEET NUMBER
A 3.2

DATE: 12-4-2024

ROOF PLAN GENERAL NOTES

A) WHERE REFERENCED ON THE ROOF PLAN, THE FOLLOWING ABBREVIATIONS SHALL DENOTE:

SC = SCUPPER OPNG AT PARAPET WALL W/MTL

DS = DOWNSPOUT LOCATION AT GUTTER

CR = CRICKET AT B.U. ROOFS TO DIVERT RAIN WATER TO SCUPPER OPNG OR ROOF DRAIN AS OCCURS. SLOPE SADDLE SO THAT VALLEY LINES RUN AT MIN. ¼" PER FOOT TOWARD DRAINS. – SEE DETAIL 16/A-10.2

B) CLAY TILE ROOF WITH A PITCH OF LESS THAN 3:12 WILL RECEIVE BITUTHENE UNDERLAYMENT BELOW ROOFING FELTS

DEMOLITION NOTES

1.– REMOVE ALL BUR, SHINGLES, CANTS AND PAPER TO BARE WOOD IN PREPARATION FOR NEW ROOFING.

2.– REMOVING EXISTING PARAPET FLASHIING & REPLACE WITH NEW.

KEY NOTES

1 NEW PARAPET

2 (E) CMU PARAPET WALL W/ MTL. COPING TO REMAIN

ROOF LEGEND

(N) T.P.O.

(N) COMPOSITION SHINGLE ROOF

(N) TILE ROOF TO MATCH (E)

ASPHALT SHINGLES OVER BITUTHANE MEMBRANE

B.U.R. ROOF WALKING PADS

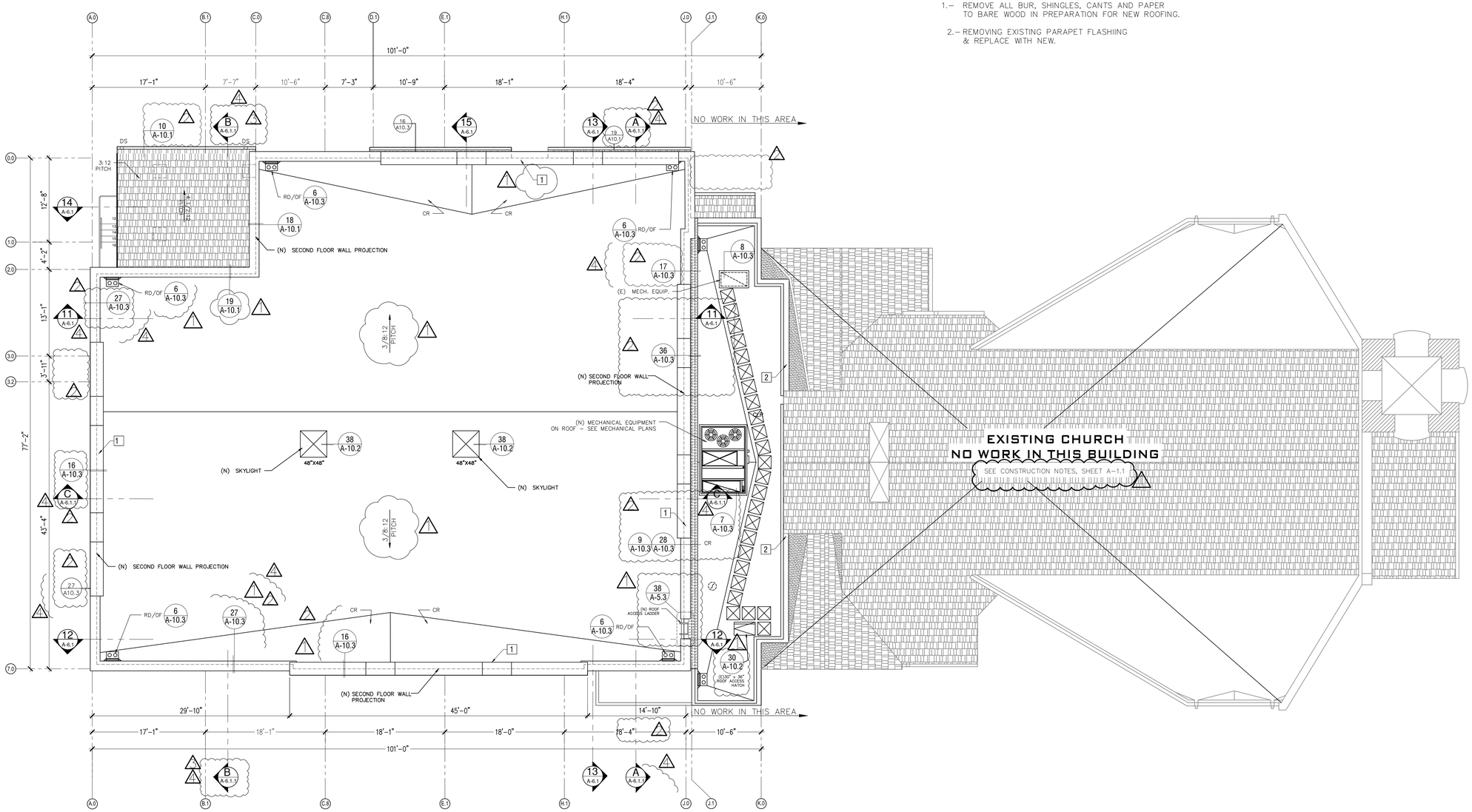

1 ROOF PLAN

SCALE: 3/16" = 1'-0"

MUNOZ and ASSOCIATES ARCHITECTS
230 Capitol Street
Salinas, Ca. 93901
salvador@munozandassociatesarchitects.com
www.amunozarchitects.com
(831)320-0488

COPYRIGHT NOTICE

REGISTERED PROFESSIONAL ARCHITECT
SALVADOR F. MUNOZ
CA.18898
EXP. 11-30-2025
STATE OF CALIFORNIA

JOB NUMBER
002-2018

REV	DATE	DESCRIPTION
1	06-01-21	REVISION
2	09-23-2021	REVISION
3	12-07-2021	REVISION
4	02-28-2022	REVISION
5	12-4-2024	FLOODPROOF REVISION

APN
117-323-011-000

OUR LADY OF ASSUMPTION CHURCH

100 SALINAS ROAD
(PAJARO) WATSONVILLE, CA 95076

SHEET TITLE
ROOF PLAN

SHEET NUMBER
A 4.1

DATE: 12-4-2024

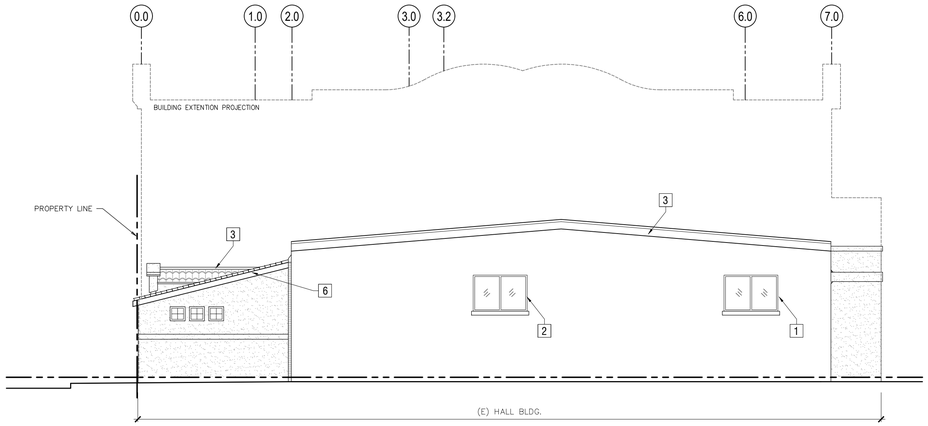

38 EXISTING WEST ELEVATION PARISH HALL BUILDING

1/8"=1' – 0"

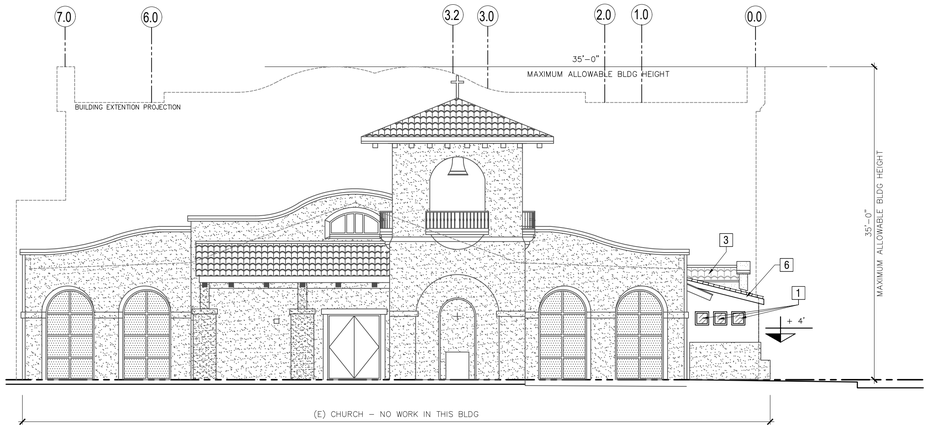

18 EXISTING CHURCH ELEVATION - FRONT (EAST)

1/8"=1' – 0"

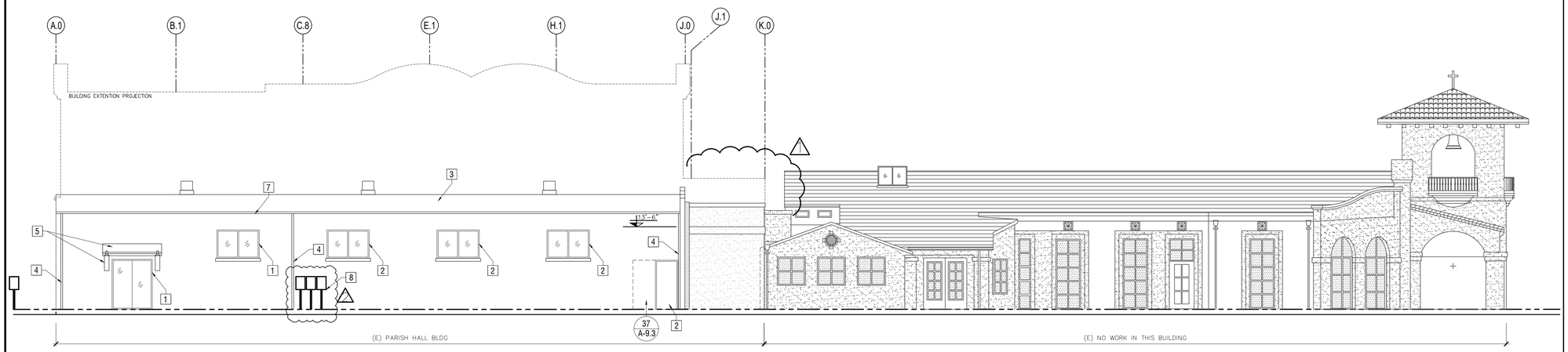

37 EXISTING SIDE ELEVATION (SOUTH)

1/8"=1' – 0"

38 EXISTING SIDE ELEVATION (NORTH)

1/8"=1' – 0"

KEY NOTES

1. (E) WINDOW OR DOOR OPENING TO REMAIN
2. REMOVE (E) WINDOW OR DOOR OPENING
3. REMOVE (E) ROOF STRUCTURE
4. REMOVE (E) DOWNSPOUT
5. (E) ROOF PROJECTION & DIAG. BRACES TO REMAIN
6. REMOVE (E) ROOFING TILES, (E) STRUCTURE TO REMAIN
7. FASCIA & GUTTER TO BE REMOVED
8. REMOVE (E) ELECTRICAL BOXES

MUNOZ and ASSOCIATES ARCHITECTS
230 Capitol Street
Salinas, Ca. 93901
salvador@munozarchitects.com
www.smunozarchitects.com
(831)320-0488

COPYRIGHT NOTICE

REGISTERED PROFESSIONAL ARCHITECT
SALVADOR F. MUNOZ
CA.18898
EXP. 11-30-2025
CALIFORNIA

JOB NUMBER
002-2018

REV	DATE	DESCRIPTION
1	06-01-21	REVISION
2	09-23-2021	REVISION
3	12-4-2024	FLOODPROOF REVISION

APN
117-323-011-000

OUR LADY OF ASSUMPTION CHURCH

100 SALINAS ROAD
(PAJARO) WATSONVILLE, CA 95076

SHEET TITLE
EXISTING EXTERIOR ELEVATIONS AND DEMOLITION

SHEET NUMBER
A 5.1

DATE: 12-4-2024

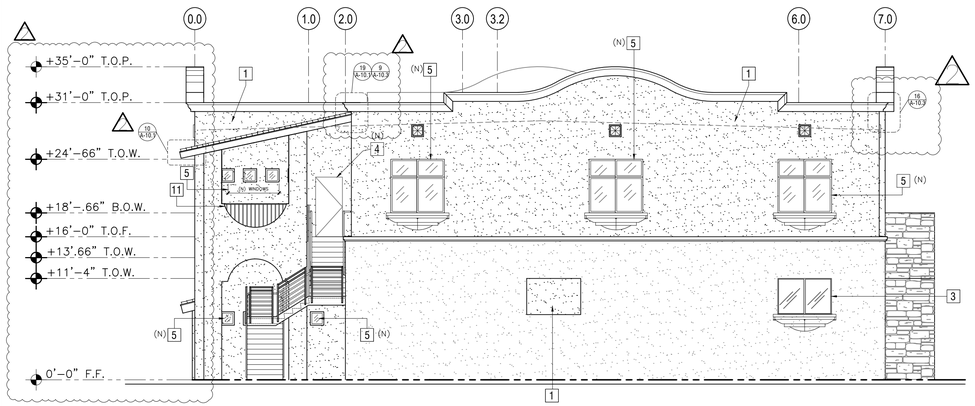

38 PROPOSED WEST ELEVATION PARISH HALL BUILDING

1/8"=1' - 0"

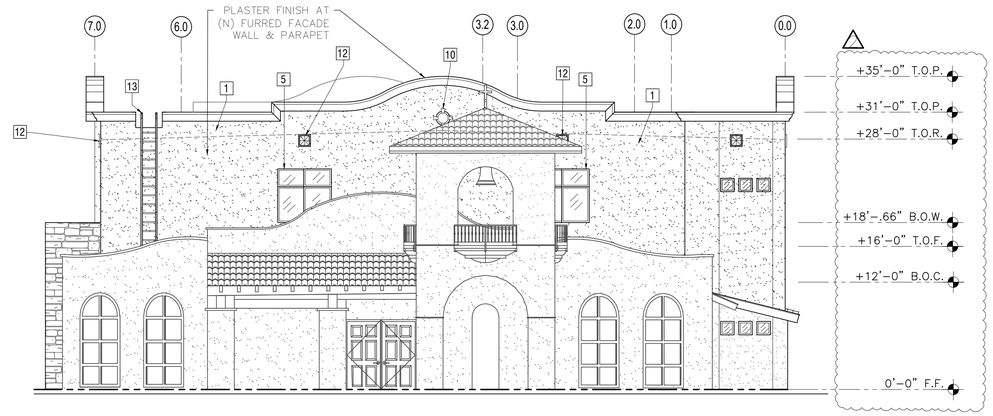

18 PROPOSED CHURCH ELEVATION - FRONT (EAST)

1/8"=1' - 0"

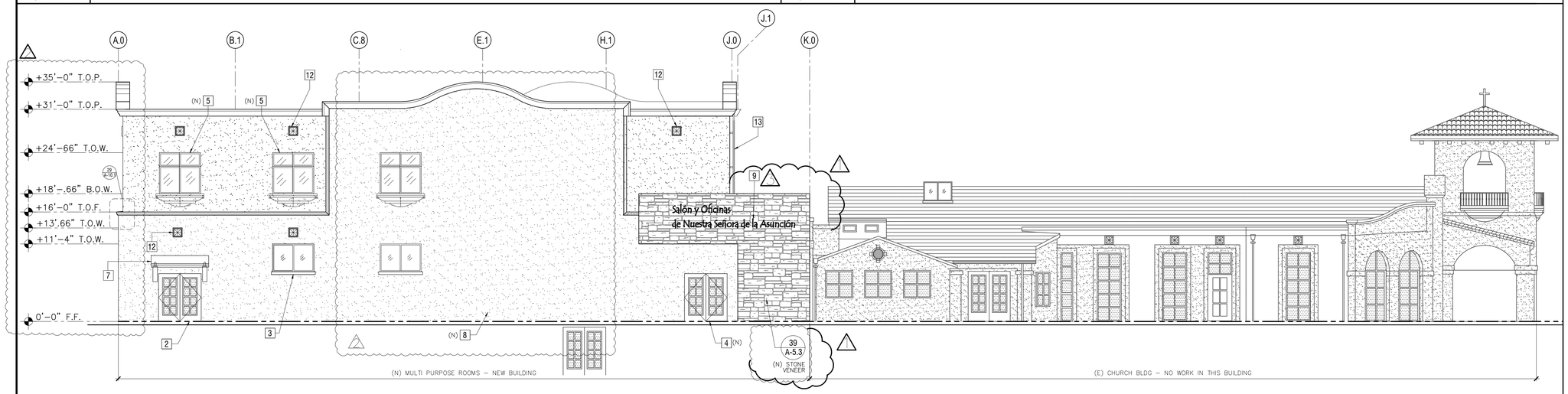

37 PROPOSED SIDE ELEVATION (SOUTH)

1/8"=1' - 0"

38 PROPOSED SIDE ELVATION (NORTH)

1/8"=1' - 0"

KEY NOTES

1. (N) CEMENT PLASTER
2. (E) DOOR TO REMAIN
3. (E) WINDOW TO REMAIN
4. (N) DOOR -SEE DOOR SCHEDULE
5. (N) WINDOW -SEE WINDOW NOTES
6. (N) DOOR -SEE WINDOW NOTES
7. (E) ROOF TO REMAIN
8. (N) MURAL
9. (N) METALLIC SIGNS-SEE DET 37/A8.1
10. ATTIC VENT-(N)=NEW & (E)=EXISTING (17 / A-6.2)
11. (N) DECORATIVE MTL RAILING
12. (N) CONC. MEDALLION (12 / A-5.3)
13. (N) ROOF ACCESS LADDER (38 / A-5.3)

LEGEND:

(E) PLASTER

(N) PLASTER

(N) STONE

MUNOZ and ASSOCIATES ARCHITECTS
230 Capitol Street
Salinas, Ca. 93901
salvador@munozandassociates.com
www.amunozarchitects.com
(831)320-0488

COPYRIGHT NOTICE

REGISTERED PROFESSIONAL ARCHITECT
SALVADOR F. MUNOZ
CA.18898
EXP. 11-30-2025
CALIFORNIA

JOB NUMBER

002-2018

REV	DATE	DESCRIPTION
1	06-01-21	REVISION
2	09-23-2021	REVISION
3	10-13-2022	REVISION
4	12-4-2024	FLOODPROOF REVISION

APN

117-323-011-000

OUR LADY OF ASSUMPTION CHURCH

100 SALINAS ROAD

(PAJARO) WATSONVILLE, CA 95076

SHEET TITLE

NEW EXTERIOR ELEVATIONS

SHEET NUMBER

A 5.2

DATE: 12-4-2024

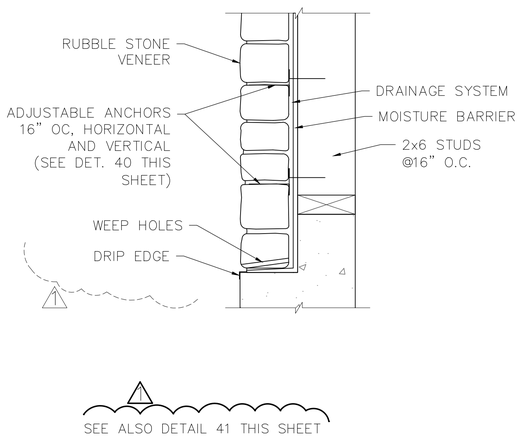

39	EXTERIOR WALL DETAIL STONE INSTALLATION
N.T.S	

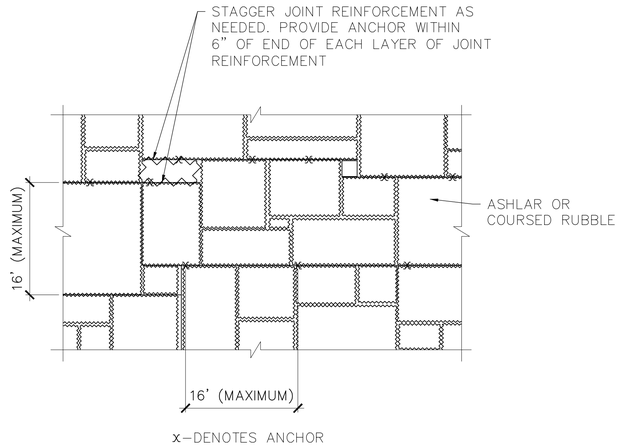

40	EXTERIOR WALL DETAIL STONE INSTALLATION
N.T.S	

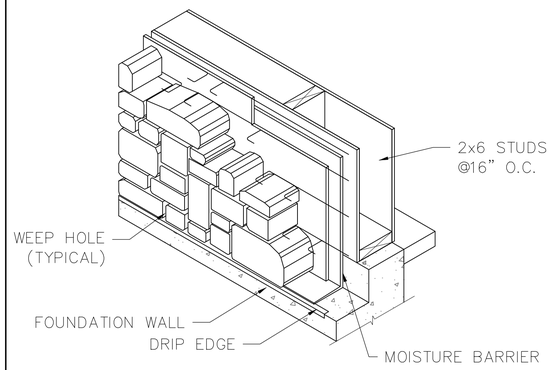

41	EXTERIOR WALL DETAIL STONE INSTALLATION
N.T.S	

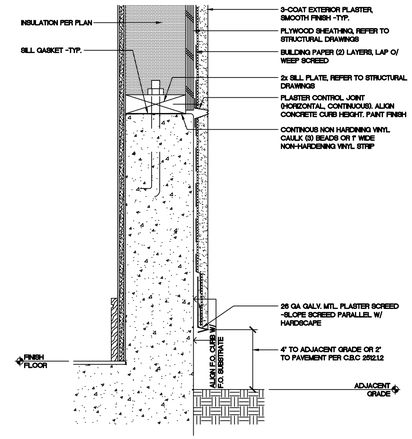

42	EXTERIOR PLASTER SCREED
N.T.S	

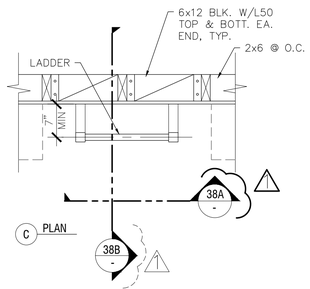

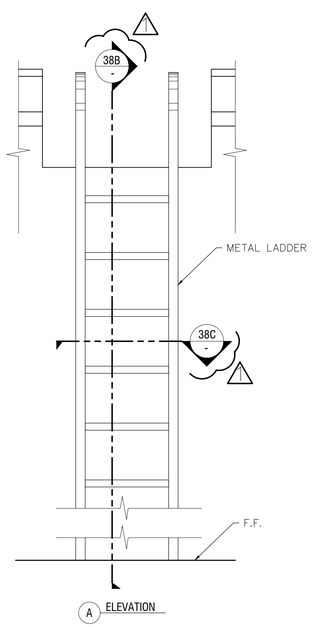

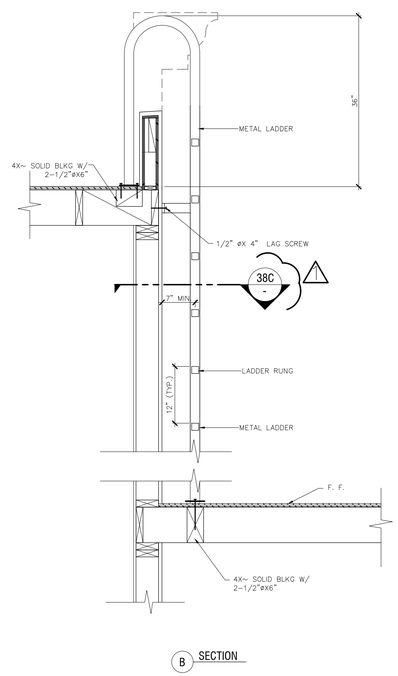

38	ACCESS LADDER
1/2"=1' – 0"	

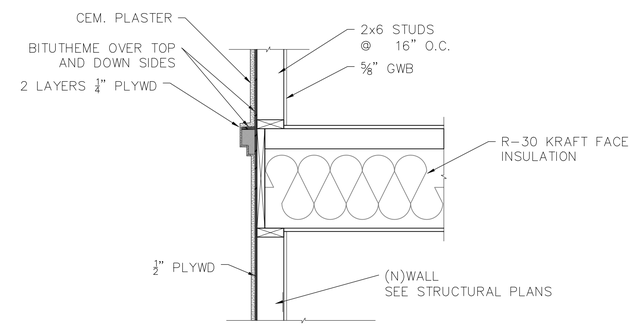

24	EXTERIOR WALL DETAIL / CONNECTION NEW WALL AND OLD WALL
3"=1' – 0"	

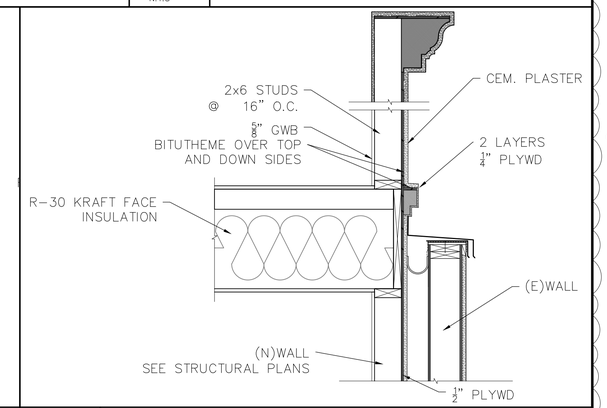

25	EXTERIOR WALL DETAIL / CONNECTION NEW WALL AND OLD WALL
3"=1' – 0"	

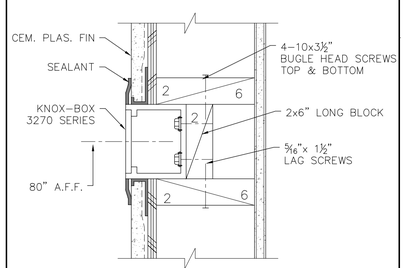

SEE SHEET A 2.3

23	KNOX BOX
3"=1' – 0"	

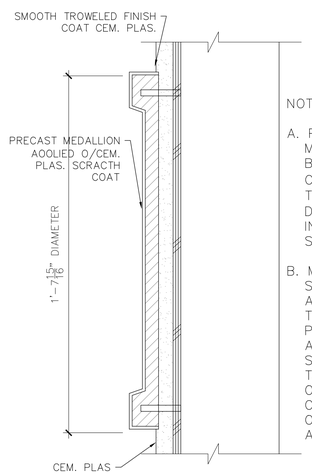

NOTES:

A. PRECAST MEDALLIONS ARE TO BE MANUFACTURED FAUX STONE CASTINGS BY PINEAPPLE GROVE DESIGNS. CASTINGS ARE NOT TO EXCEED 2⅝" THICKNESS; 36" IN ANY FACE DIMENSION: 5 LBS. PER SQUARE FOOT IN WEIGHT TO COMPLY WITH AC1530 SECTION 6.3.2.1

B. MEDALLIONS ARE TO HAVE STAINLESS STEEL THREADED PINS AT CORNERS OR FOUR POINTS AT THE MEDALLION PERIMETER THAT PENETRATE WALL PLYWOOD. PINS ARE TO BE ANCHORED BACK SURFACE OR THE MEDALLION ARE TO BE ADHERED TO SCRATCH COAT OF PLASTER FINISH WITH ADHESIVE CAPABLE OF MIN. SHEAR STRENGTH OF 50 PSI TO COMPLY WITH AC1530, SECTION 6.3.2.4

12	PRECAST MEDALLION DETAIL
3"=1' – 0"	

MUNOZ and ASSOCIATES ARCHITECTS
230 Capitol Street
Salinas, Ca. 93901
(831)320-0488

COPYRIGHT NOTICE

REGISTERED PROFESSIONAL ARCHITECT
SALVADOR F. MUNOZ
CA.18898
EXP. 11-30-2025
CALIFORNIA USA

JOB NUMBER
002-2018

REV	DATE	DESCRIPTION
1	06-01-21	REVISION
2	12-4-2024	FLOODPROOF REVISION

APN
117-323-011-000

OUR LADY OF ASSUMPTION CHURCH
100 SALINAS ROAD
(PAJARO) WATSONVILLE, CA 95076

SHEET TITLE
DETAILS

SHEET NUMBER
A 5.3

DATE: 12-4-2024

UPDATE: 03/26/20

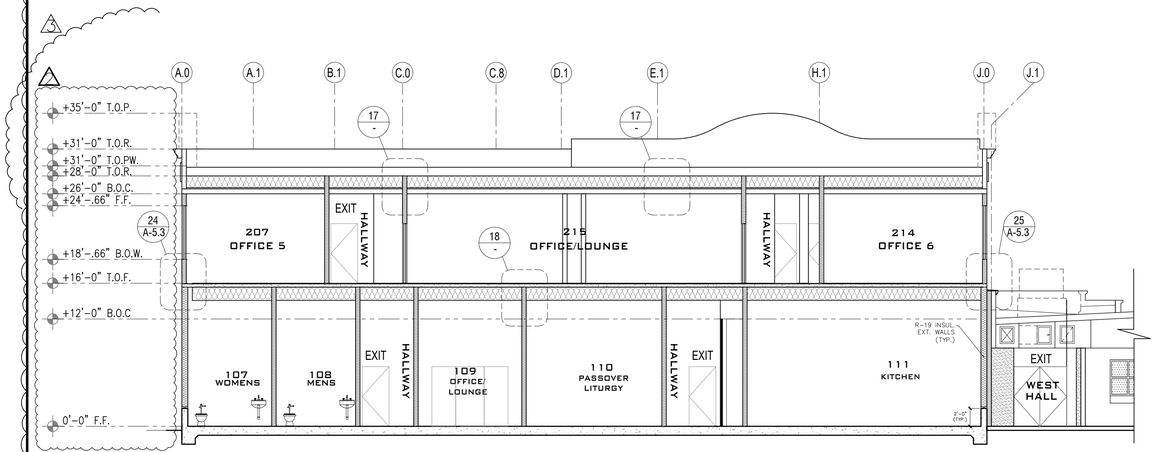

11 SECTION THRU CHURCH (THRU REMODELED SANTUARY AREA)

1/8"=1' - 0"

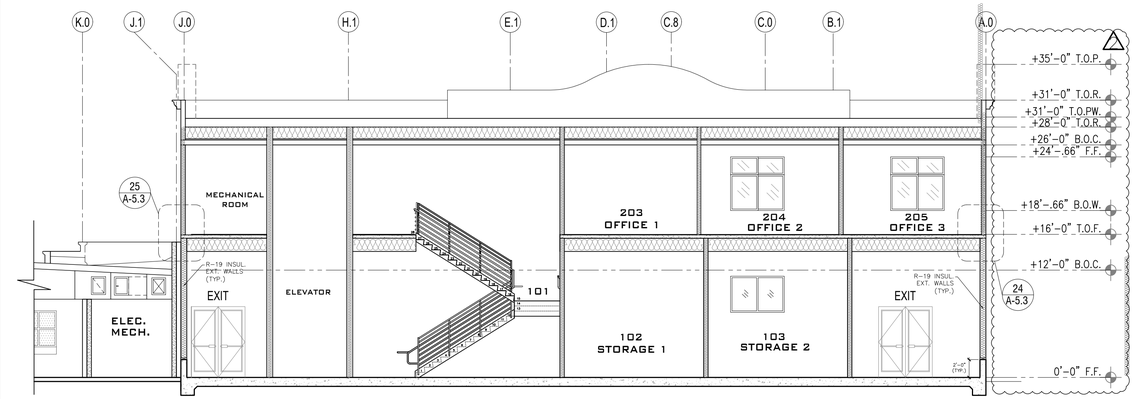

12 SECTION THRU CHURCH

1/8"=1' - 0"

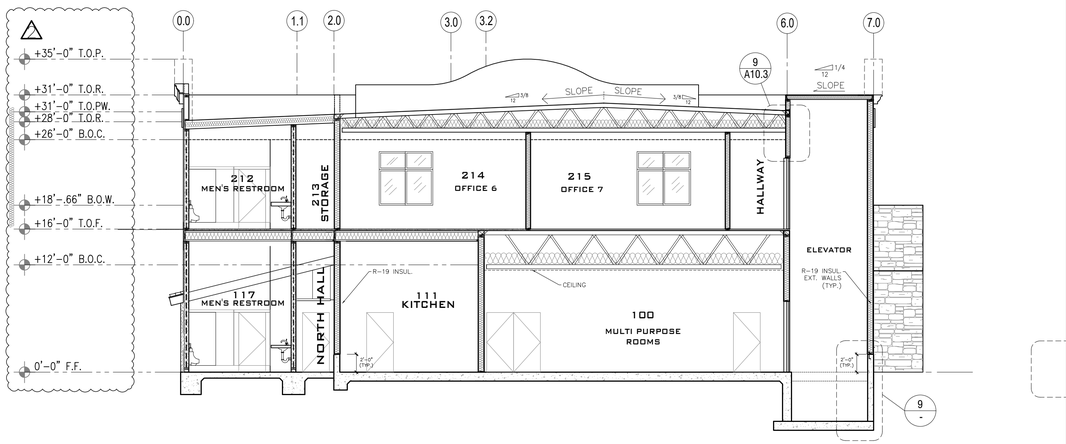

13 SECTION THRU CHURCH & ADDITIONS-(LOOKING TOWARD REMODELED SANTUARY AREA)

1/8"=1' - 0"

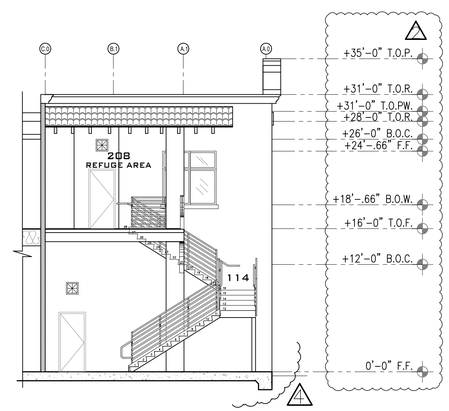

14 SECTION THRU EXTERNAL STAIRS

1/8"=1' - 0"

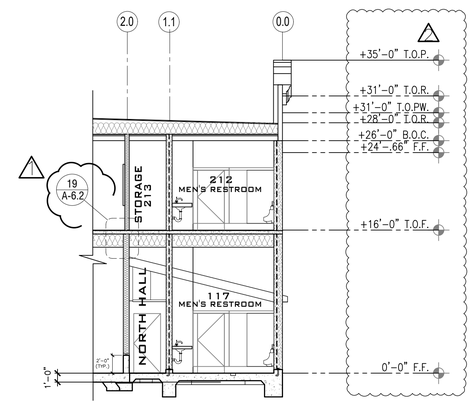

15 SECTION THRU NEW TOILET ROOM

1/8"=1' - 0"

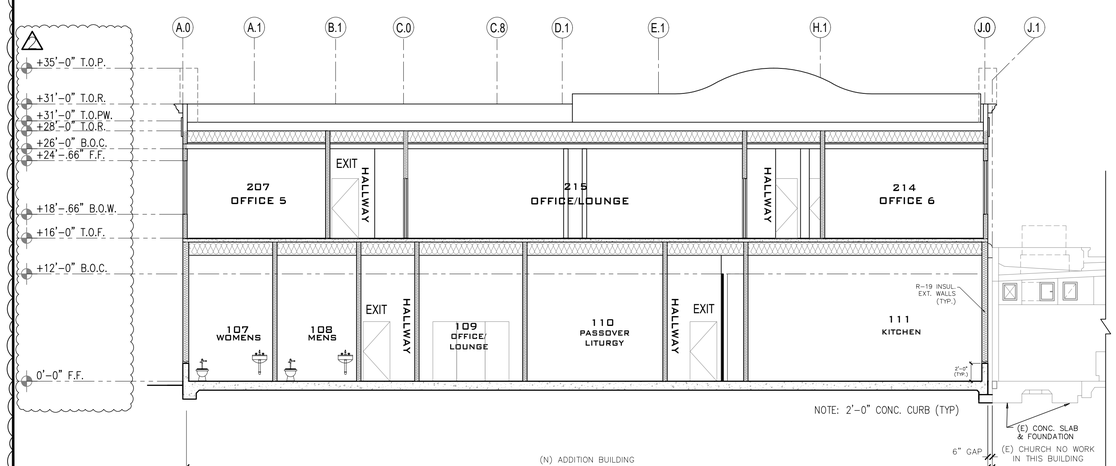

16 SECTION THRU CHURCH AND MEETING HALL WITH NEW ADDITIONS

1/8"=1' - 0"

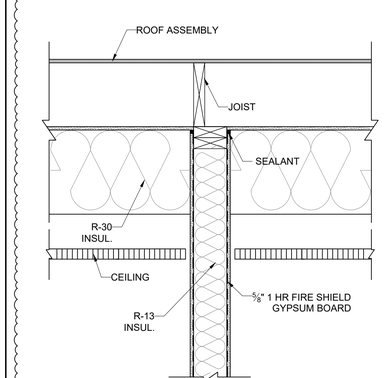

17 PART. WALL @ CEILING/ROOF DETAIL

N. T. S.

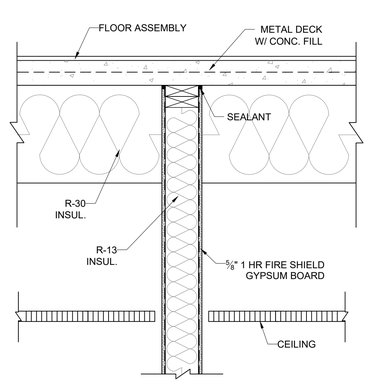

18 PART. WALL @ CEILING/FLOOR DETAIL

N. T. S.

INSULATION REQUIREMENTS

AREAS OF NEW ADDITIONS ARE TO HAVE INSULATION AS FOLLOWS:

1. AT EXTERIOR WALLS: R-19 KRAFT FACED BATT INSULATION BETWEEN ALL STUD BAYS FULL HEIGHT OF WALL TO ROOF FRAMING
2. AT NEW INTERIOR ROOM WALLS: R-19 UNFACED BATT INSULATION BETWEEN ALL STUD BAYS FULL HEIGHT OF WALL TO ROOF FRAMING
3. AT ROOF FRAMING: R-30 KRAFT FACED BATT INSULATION BETWEEN ALL RAFTERS

NOTES

1. SEE STRUCTURAL PLANS FOR FOUNDATION DETAILS
2. SEE STRUCTURAL PLANS FOR DETAILS

MUNOZ and ASSOCIATES ARCHITECTS
230 Capitol Street
Salinas, Ca. 93901
e-mail: salvador@munozarchitects.com
www.amunozarchitects.com
(831)320-0498

COPYRIGHT NOTICE

REGISTERED PROFESSIONAL ARCHITECT
SALVADOR F. MUNOZ
CA.18898
EXP. 11-30-2025
CALIFORNIA

JOB NUMBER
002-2018

REV	DATE	DESCRIPTION
1	06-01-21	REVISION
2	09-23-2021	REVISION
3	12-07-2021	REVISION
4	02-28-2022	REVISION
5	12-4-2024	REVISION-FLOODPROOF

APN
117-323-011-000

OUR LADY OF ASSUMPTION CHURCH
100 SALINAS ROAD
(PAJARO) WATSONVILLE, CA 95076

SHEET TITLE
BUILDING SECTIONS

SHEET NUMBER
A 6.1

DATE: 12-4-2024

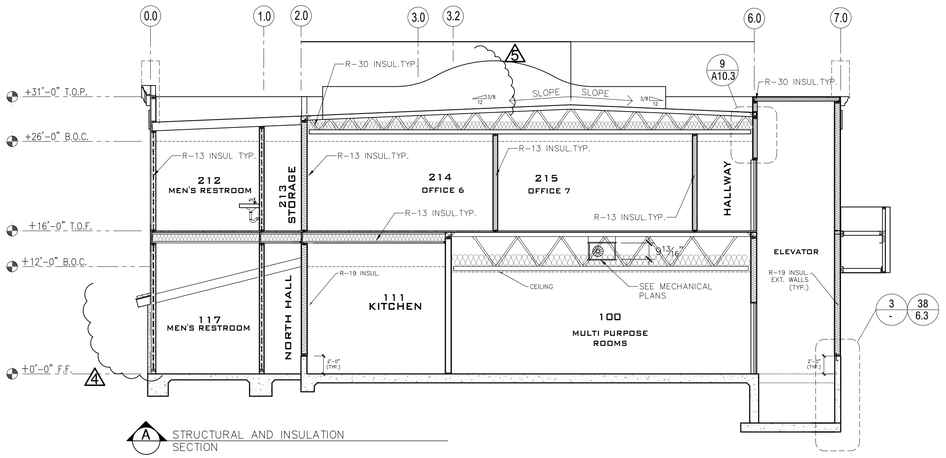

A STRUCTURAL AND INSULATION SECTION

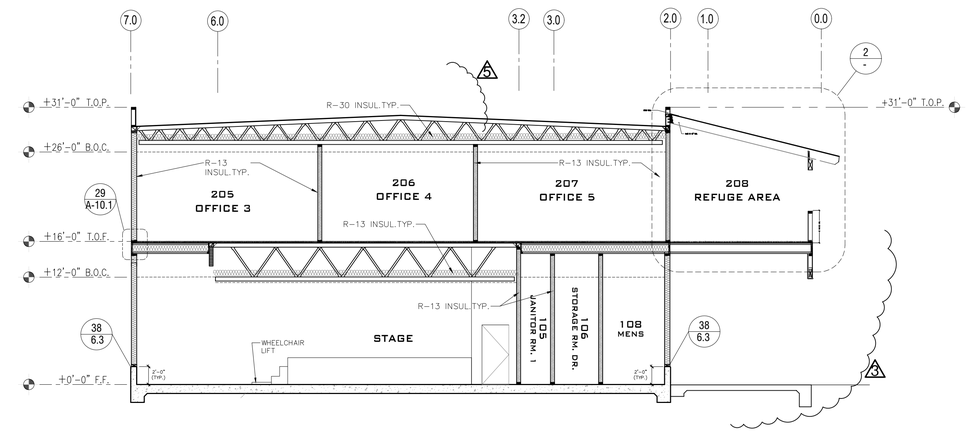

B STRUCTURAL AND INSULATION SECTION

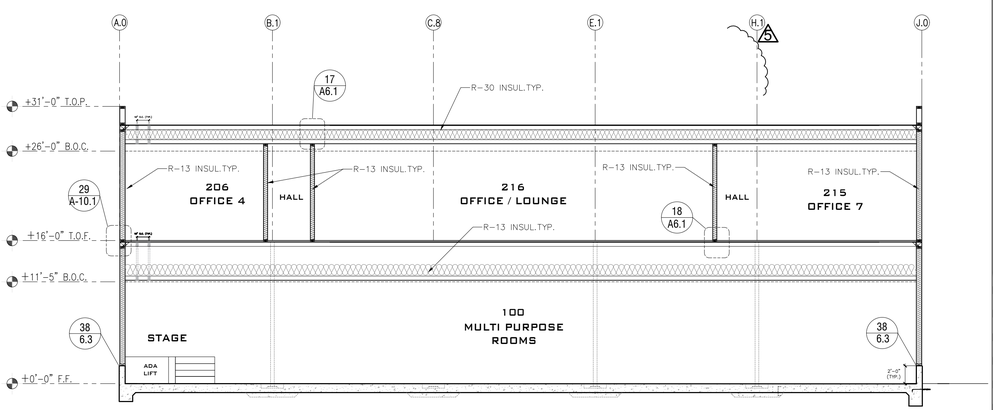

C STRUCTURAL AND INSULATION SECTION

1 STRUCTURAL AND INSULATION SECTIONS

N.T.S.

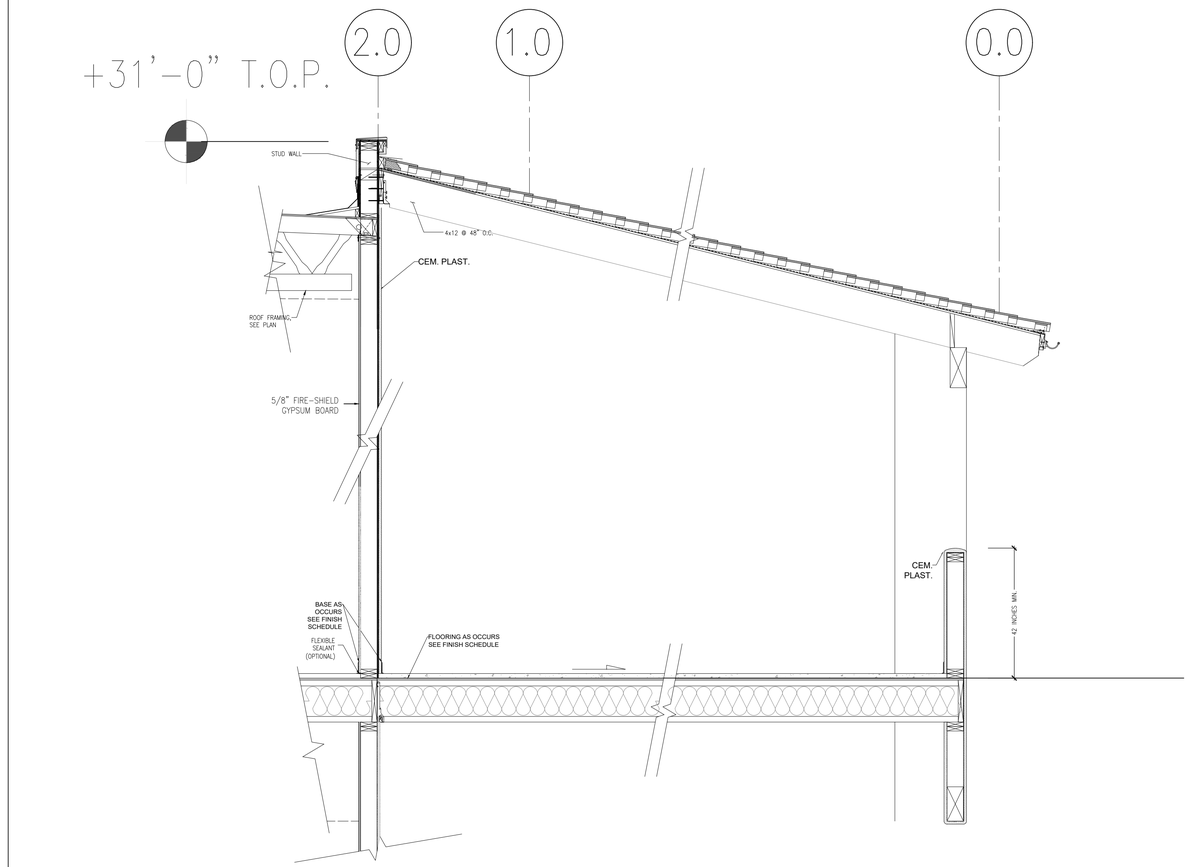

2 REFUGE AREA SECTION

N.T.S.

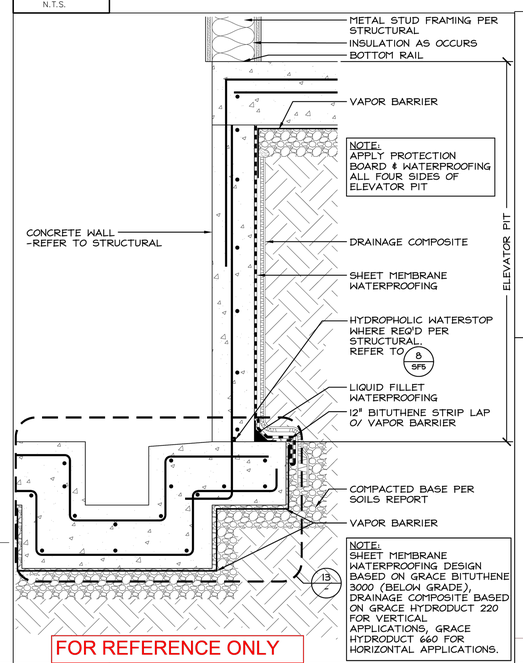

3 ELEVATOR PIT WATERPROOFING DETAIL

N.T.S.

XYPEX

ADMIX C-500/C-500 NF

CRYSTALLINE TECHNOLOGY

Concrete Waterproofing

Description

XYPEX C-500 is a unique chemical treatment for the waterproofing, protection and improvement of concrete. XYPEX ADMIX C-500/C-500 NF is added to the concrete mix at the time of batching. It reacts with the free lime and other by-products of hydration and water, along with pre-existing fine NF grade and various active, proprietary chemicals. These active chemicals react with the free lime and other by-products of the cement hydration to form insoluble crystals to block pores and capillary tracts. This reaction generates a non-soluble crystalline formation throughout the pores and capillary tracts of the concrete that permanently seals the concrete and prevents the penetration of water and other aggressive fluids.

Xypex Admix C-Series

All variations of the Admix C-Series contain the same amount of reactive chemicals at their prescribed dosage rates and provide the same waterproofing and durability improvements to concrete. Admix C-500 NF is also available in regular or no-three grades (NT). **Xypex Admix C-500/C-500 NF** is formulated to have minimal or no effect on the setting time of the concrete. Admix C-500 is formulated for concrete mix designs where a normal or mildly delayed set is desired. **Xypex Admix C-2000/C-2000 NF** is formulated for use in concrete where a faster initial cure or hydration rate is typically required. See Setting Time and Strength for more details. Consult with a Xypex Technical Services Representative for the most appropriate Xypex Admix for your project.

Recommended for:

- Reservoirs
- Sewage and Water Treatment Plants
- Water and Wastewater Lines
- Tunnels and Subway Systems
- Underground Vaults
- Foundations / Basements
- Parking Structures
- Bridge Decks
- Precast Components
- Bridge Structures
- Dams

- Resists extreme hydrostatic pressure
- Becomes an integral part of the substrate
- Highly resistant to aggressive and chemical environments
- Seals cracks hairline cracks up to 0.4 mm
- Allows concrete to breathe
- Non-toxic
- No VOCs

Concrete Waterproofing By Crystallization™

Test Data

PERMEABILITY

U.S. Army Corps of Engineers CRD C48, "Permeability of Concrete", Ashtec Engineering Corp., Northville, USA

Two concrete samples containing Xypex Admix and an untreated control sample were tested for water permeability. The Xypex Admix treated samples showed no water flow to a pressure of 10 bar (~ 100 MPa (250 ft. / 106.7 m water head). Results showed moisture and permeated water throughout the untreated sample after 24 hours. However, the Xypex Admix samples showed no leakage, and water penetration of only 13 mm / 0.56 inches after 120 hours (5 days).

U.S. Army Corps of Engineers CRD C48, "Permeability of Concrete", Sidons Services, Pte Ltd., Singapore.

Six Xypex Admix-treated and six untreated concrete samples were tested for water permeability. Pressure was gradually increased over five days and then maintained at 7 bar (~ 70 MPa (143 ft. / 43.5 m water head) for 48 hours. No reference samples showed water leakage beginning on the fifth day and increasing throughout the test period, the average penetration observed no water leakage at any time during the test.

ACI Water Permeability Test, "Water Permeability of Concrete", Australia Centre of Construction Innovation, University of New South Wales, Sydney, Australia.

Concrete samples containing Xypex Admix NF at a dosage rate of 0.8% and 1.2% were tested for water permeability. Results showed no water leakage when subjected to a pressure of 10 bars (100 meters - 328 ft. water head) for 2 weeks. Water permeability coefficients were calculated at 0.5 x 10-12 m/s for the 0.8% and 0.3 x 10-12 m/s for the 1.2% dosage rate.

STA EN 12390-8, "Testing of Hardened Concrete. Depth of Water Penetration Under Pressure", Technical and Research Laboratories, Montreal, Canada.

Concrete cubes, one prepared with Admix C-500 at 1% and Admix C-1000 NF at 1% along with control cubes were tested for water penetration. After 28 days, the specimens were subsequently split transversely to measure depth of water penetration. Depth results for C-500/C-1000 NF were 72.5 mm and 25 mm respectively, whereas penetration on control samples was 73.5 mm. In using the Xypex Admix, the depth of water penetration was reduced by 65% for C-500/C-1000 NF treated concrete (mixed at 20 to 120 reduction compared to the control concrete.

COMPRESSIVE STRENGTH

ASTM C 39, "Compressive Strength of Cylindrical Concrete Specimens", Kinetitlab Laboratories, Burlington, Ontario, USA.

The 28 day compressive strength test of the concrete containing Xypex Admix measured 7700 psi - 53.1 MPa as compared to the reference sample at 6460 psi - 44.5 MPa (a 15% increase).

CHEMICAL RESISTANCE

ASTM C 267, "Chemical Resistance of Surface Set to Cryptonic Attack of Concrete Products with Admix C-1000 and Admix C-1000 NF", Betonconsult, Building Materials Laboratory, Montreal, Canada.

Concrete specimens treated with Admix C-1000 at 1% and 2%, and Admix C-1000 NF at 0.5% and 1% were said along with non-treated concrete specimens. The specimens were exposed to a highly concentrated sulphuric acid (pH 1.0). After 28 days of exposure, the specimens were visually weighed to determine mass loss. The Admix treated samples recorded a mass loss between 5 and 50 g/m² and the untreated control specimen 1000 g/m². The untreated specimens measured an average mass loss of 4,800 g/m² with significant surface deterioration.

AB 04 2006, "Durability Assessment of Reinforced Concrete Structures Containing Xypex Admix Bipowed Concrete", Australian Cement Technology and Ithanda Pty. Ltd. Chemical Laboratories, Victoria, Australia.

Lascelles Wharf serves as a bulk chemical and grain dock. In 1995, as part of an extensive maintenance program and to protect new precast concrete panels from the extremely harsh marine environment, the concrete panel joints were sealed with Xypex Admix C-Series at 1%. Recently, tests were conducted to predict 'initiation time to corrosion' for the concrete panels. Chloride content profiles, at different depths into the concrete, Chloride content profiles, concrete cover, surface chloride content, and chloride diffusion coefficient were used in a mathematical model to predict the residual service life of this structure. The average initiation time to corrosion was estimated at 50 years. Therefore, the structure had been designed for 50 years of service.

HT BUILD #43, "Chloride Diffusion by Rectified with 95.5% NaCl Solution of 40 MPa Concrete Containing Admix C-1000 NF", Australia Centre for Construction Innovation, University of New South Wales, Sydney, Australia.

The NewTech NT BUILD #43 is a standard accelerated test method for the rapid chloride ion diffusion coefficient of concrete. In this test program, concrete mixes with 20% fly ash, 30% slag, and 60% slag were cast (total cementitious content = 400 kg, 0.4 w/c). Xypex Admix C-1000 NF at 0.8% and 1.2% by weight of cementitious materials were

"Testing of Xypex Admix C-1000 NF Crack Healing Ability", Ashtec Engineering Corp. and Sidons Laboratory, Bay-Area Navy, Northern, Lane.

Prior to construction of a Nalong River dam, testing was undertaken to substantiate the ability of Xypex Admix to self-heal static cracks. Three large concrete slabs treated with Xypex Admix C-1000 NF at 1% were cast along with control slabs. Following curing, a force was applied at the mid-point of each slab to create cracks with widths from 0.1 mm to 0.4 mm. The force was then released and the cracked area, initially all cracks healed, at 4 days all dripping had ceased from the cracks of the Xypex treated slabs while the control slab still had water flowing. At 28 days, core samples were taken from the cracked area. SEM photographs showed significant crystalline growth throughout the cracks of the Xypex treated slab.

SCANNING ELECTRON MICROSCOPY

"Scanning Electron Microscopy of Cementitious Products as Per Xypex Admix Modified Concrete", Construction Australian Centre for Construction Innovation, University of New South Wales, Sydney, Australia.

Slag and fly ash blended cement samples were treated with Xypex Admix and examined for evidence of crystalline growth at ages ranging from 6 months to 2 years. Samples were sliced and/or split and examined at magnifications of 20x and 100x. Results showed significant crystalline growth was observable on all Xypex treated samples, providing evidence of Xypex crystalline reactions with fly ash and slag blended cements.

FREEZE/THAW DURABILITY

ASTM C 666, "Resistance to Freeze/Thaw Durability", Independent Laboratory, Cleveland, USA

After 300 freeze/thaw cycles, the Xypex Admix-treated samples indicated 94% relative durability.

POTABLE WATER EXPOSURE

AWWA C-205, "Xypex Admix Admix Component-Health and Safety Data", Independent Laboratory, USA

Exposure testing of potable water in contact with Xypex-treated samples indicated no harmful effects.

Directions for Use

Xypex Admix C-500/C-500 NF is added to the concrete at the time of batching. It is important to obtain a homogeneous mix. Xypex Admix C-500/C-500 NF may be added dry Admix powder directly to wet mixed concrete as this could cause clumping and thorough dispersion may not occur. The following methods have been used successfully according to the type of batch plant operation and equipment. The following methods have been used successfully in the field and it is recommended that the local Xypex Technical Services Representative be consulted about the best method to use.

1. **ADDITION TO COARSE AGGREGATE BELT** Add Xypex Admix C-500/C-500 NF powder to coarse aggregate belt directly to the coarse aggregate conveyor belt manually or through computer controlled ones batching system. Account for runner health and safety issues with moving belts and belt-fed stacks conveyors. Three large concrete slabs treated with Xypex Admix C-1000 NF at 1% were cast along with control slabs. Following curing, a force was applied at the mid-point of each slab to create cracks with widths from 0.1 mm to 0.4 mm. The force was then released and the cracked area, initially all cracks healed, at 4 days all dripping had ceased from the cracks of the Xypex treated slabs while the control slab still had water flowing. At 28 days, core samples were taken from the cracked area. SEM photographs showed significant crystalline growth throughout the cracks of the Xypex treated slab.

2. **TRUCK ADDITION (AT PLANT)** Add Xypex Admix C-500/C-500 NF powder to the truck prior to the addition of the materials or the premixed concrete in accordance with the manufacturer's recommendations. Ensure that the mixer drum is at full speed and that the Xypex Admix powder is added bags as rectangular in the drum as possible, with the bags being placed in the middle of the drum and not against the drum and in addition to the truck mixer drum prior to loading. Account for added water in the mix design and slump.

3. **ADDITION TO CENTRAL MIXER** Add Xypex Admix C-500/C-500 NF powder to the central mixer. Account for runner health and safety issues when accessing the equipment.

NOTE:

1. Although addition on site in powder form is not normally recommended, it is sometimes necessary to add Xypex Admix to truck in slurry form (e.g. 2 parts powder to 1 parts water by volume). We convenie for a minimum of 2 hours mixing time. Account for added water in the mix design and slump.

2. Concrete containing the Xypex Admix does not preclude the requirement for design of crack control, construction joint detailing, proper placement, consolidation and curing. Concrete must be properly designed, placed, consolidated, and hydrocuring, lie-holes, cracks beyond specified limits.

3. Further guidelines are available that address the use of Xypex Admix for a specific situation, (e.g. dry mixes, use in hot ambient conditions, cold-weather concreting, etc.). Contact Xypex Technical Services Department for further information.

Setting Time and Strength

The setting time of concrete is affected by the chemical and physical composition of ingredients, temperature of the concrete and climate conditions. Xypex Admix C-500/C-500 NF may delay the initial and final set of the concrete. When Concrete containing the Xypex Admix C-500/C-500 NF may develop higher ultimate strengths than plain concrete. Trial mixes should be carried out under project conditions to determine the setting time and strength of the concrete containing the Xypex Admix. Consult with a local Xypex Technical Services Representative for the most appropriate Xypex Admix for your project.

Limitations

When incorporating Xypex Admix, the temperature of the concrete mix should be above 40°F (4°C).

Technical Services

For more information, alternative installation methods, or information concerning the compatibility of the Xypex Admix with other products or technologies, contact the Technical Services Department of Xypex Chemical Corporation or your local Xypex Technical Services Representative.

Certification

Xypex Admix C-500/C-500 NF is certified as a water retentive admixture by NSF International. For the current listing of the product and regular audits of the FPC are carried out by Neilfeed Body 1020 725-D (980-001-002).

Safe Handling Information

Xypex is alkaline. As a cementitious powder or mixture, Xypex Admix can cause irritation to the eyes and mucous form for treating these problems are clearly stated on all Xypex pails and packaging. The Manufacturer also maintains Material Safety Data Sheets (MSDS) for all of its Xypex products. Each sheet contains health and safety information for the protection of workers and customers. The Manufacturer recommends you contact Xypex Chemical Corporation or your local Xypex Technical Services Representative to obtain a Material Safety Data Sheets prior to product storage or use.

Warranty

The Manufacturer warrants that the products manufactured by it shall be free from material defects and will be consistent with its normal high quality. Should any of the products be found defective within one year, the liability shall be limited to replacement of the product ex factory. The Manufacturer makes no warranty as to merchantability or fitness for a particular purpose, or any other, express or implied, of all other warranties expressed or implied. The user shall determine the suitability of the product for his intended use and assume all risks and liability in connection therewith.

CE

XYPEX

12701 Maybelle Place, Richmond, BC, Canada V6V 2G9 Toll-free: 1.800.961.4477
Tel: 604.273.8800 Fax: 604.270.8021 E-mail: info@xypex.com Web: www.xypex.com
XYPEX is a registered trademark of Xypex Chemical Corporation. Copyright © 1991-2021 Xypex Chemical Corporation.

XYPEX ADMIX C-500/C-500 NF PRODUCT DATA

NOTES

1. SEE STRUCTURAL PLANS FOR FOUNDATION DETAILS
2. SEE STRUCTURAL PLANS FOR DETAILS

MUNOZ and ASSOCIATES ARCHITECTS
230 Capitol Street
Salinas, Ca. 93901
salvador@munozarchitects.com
www.smunozarchitects.com
(831)320-0489

COPYRIGHT NOTICE

REGISTERED PROFESSIONAL ARCHITECT
SALVADOR F. MUNOZ
CA.18898
EXP. 11-30-2025
CALIFORNIA, USA

JOB NUMBER
002-2018

REV	DATE	DESCRIPTION
A	06-01-21	REVISION
B	09-23-2021	REVISION
C	12-07-2021	REVISION
D	02-28-2022	REVISION
E	03-23-2022	REVISION
F	12-4-2024	FLOODPROOF REVISION

APN
117-323-011-000

OUR LADY OF ASSUMPTION CHURCH

100 SALINAS ROAD

(PAJARO) WATSONVILLE, CA 95076

SHEET TITLE
BUILDING SECTIONS

SHEET NUMBER
A 6.1.1

DATE: 12-4-2024

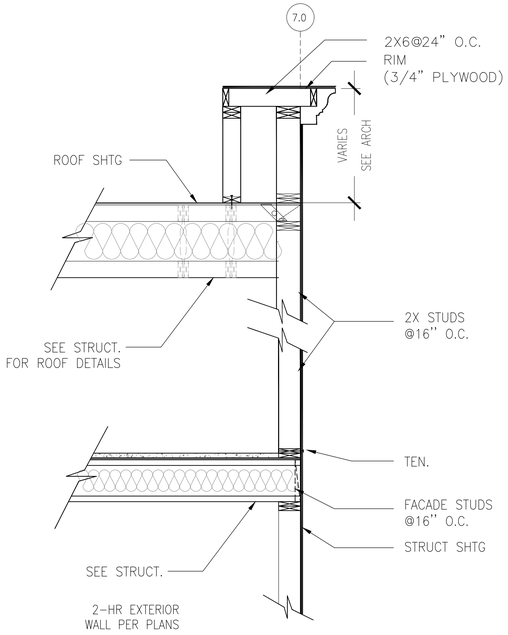

24	WALL/FLOOR/ROOF SECTION DETAIL
1/2"=1' - 0"	

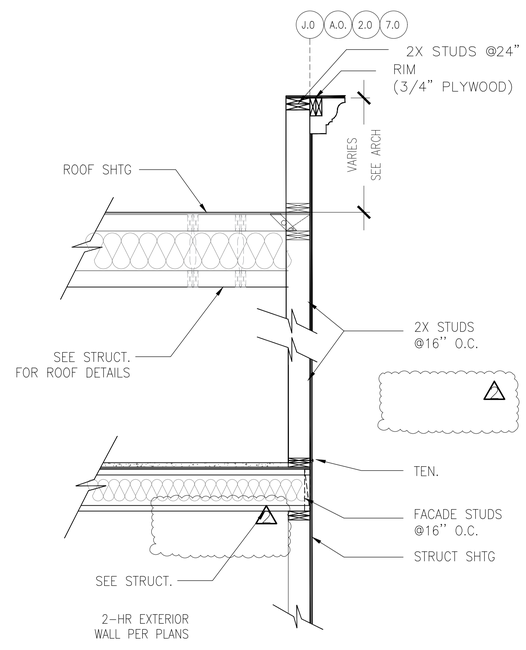

23	WALL/FLOOR/ROOF SECTION DETAIL
1/2"=1' - 0"	

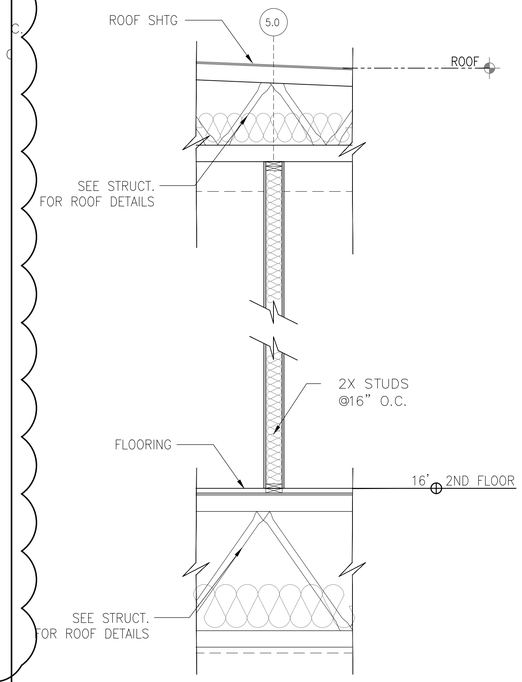

22	INT. WALL SECTION DETAIL
1/2"=1' - 0"	

keene building products

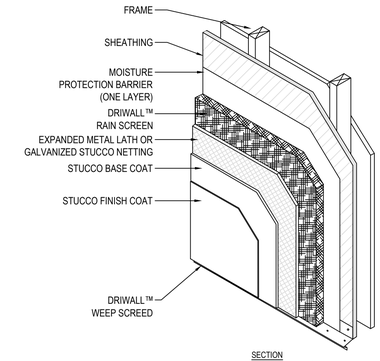

SECTION
ONE COAT APPLICATION EPS BOARD

NOTES:
1. INSTALLATION TO BE COMPLETED IN ACCORDANCE WITH MANUFACTURER'S SPECIFICATIONS.
2. DO NOT SCALE DRAWING.
3. THIS DRAWING IS INTENDED FOR USE BY ARCHITECTS, ENGINEERS, CONTRACTORS, CONSULTANTS AND DESIGN PROFESSIONALS FOR PLANNING PURPOSES ONLY. THIS DRAWING MAY NOT BE USED FOR CONSTRUCTION.
4. ALL INFORMATION CONTAINED HEREIN WAS CURRENT AT THE TIME OF DEVELOPMENT BUT MUST BE REVIEWED AND APPROVED BY THE PRODUCT MANUFACTURER TO BE CONSIDERED ACCURATE.
5. CONTRACTOR'S NOTE: FOR PRODUCT AND COMPANY INFORMATION VISIT www.CADdetails.com/info

25	TYP. WALLS/SIDING
N. T. S.	

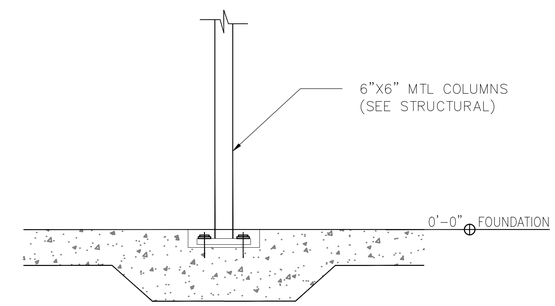

21	FOUNDATION/COLUMN DETAIL
1/2"=1' - 0"	

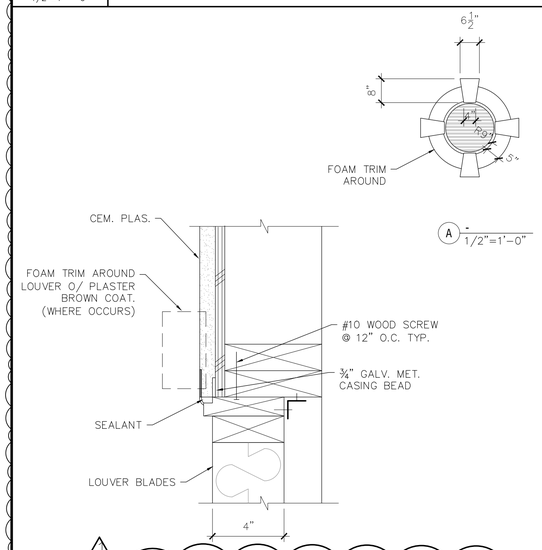

17	ATTIC VENT
1/2"=1' - 0"	

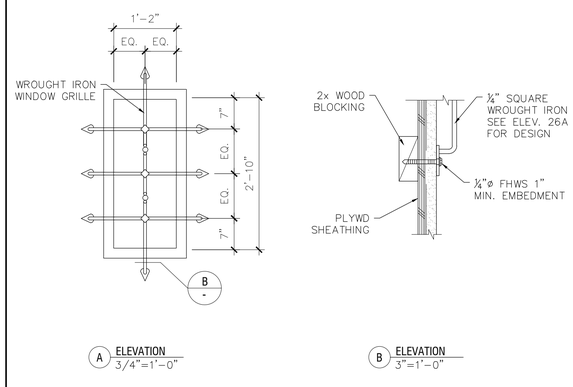

18	WROUGHT IRON WINDOW GRILLE

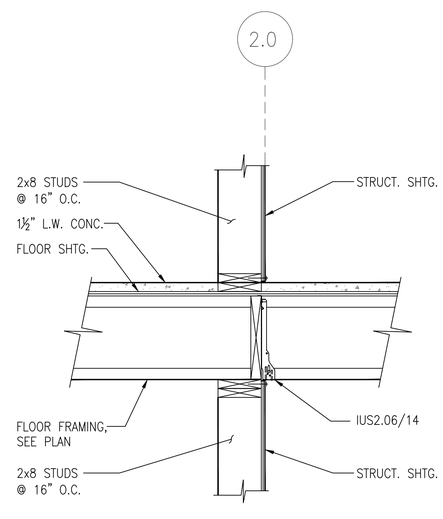

19	WALL/FLOOR DETAIL
1"=1' - 0"	

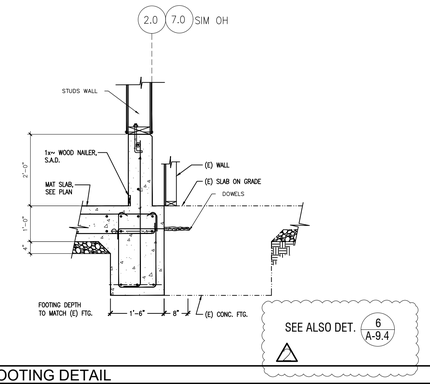

20	FOOTING DETAIL
1/2"=1' - 0"	

MUNOZ and ASSOCIATES ARCHITECTS
230 Capitol Street
Salinas, Ca. 93901
salvador@munozarchitects.com
www.amunozarchitects.com
(831)320-0488

COPYRIGHT NOTICE

REGISTERED PROFESSIONAL ARCHITECT
SALVADOR F. MUNOZ
CA.18898
EXP. 11-30-2025
STATE OF CALIFORNIA

JOB NUMBER
002-2018

REV	DATE	DESCRIPTION
1	06-01-21	REVISION
2	09-23-2021	REVISION
3	12-4-2024	FLOODPROOF REVISION

APN
117-323-011-000

OUR LADY OF
ASSUMPTION CHURCH
100 SALINAS ROAD
(PAJARO) WATSONVILLE, CA 95076

SHEET TITLE
BUILDING DETAILS

SHEET NUMBER
A 6.2

DATE: 12-4-2024

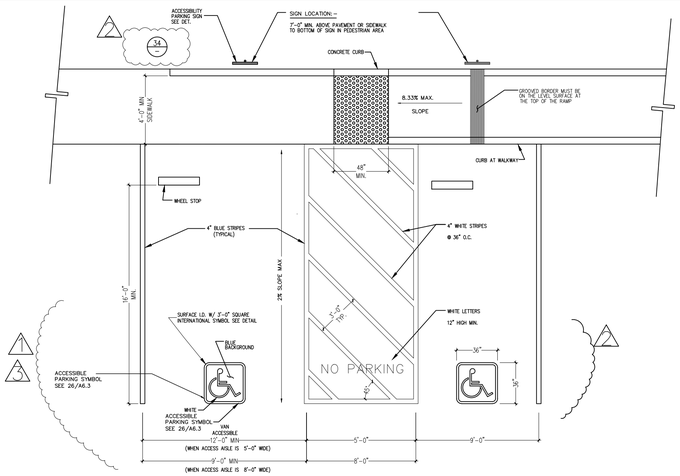

37 A6.3 HANDICAP PARKING LAYOUT
SCALE: N.T.S.

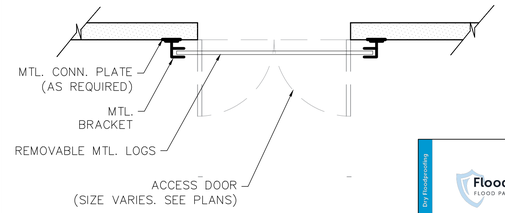

FLOOD PANEL SUPER FLOOD LOG SYSTEM

APPROVED MANUFACTURER:
FLOODPROOFING.COM, INC., WHICH IS LOCATED AT 19 MANTUA ROAD, MOUNT ROYAL, NJ, 08061;
TELEPHONE: 800–507–0865;
EMAIL: INFO@FLOODPROOFING.COM;
WEBSITE: WWW.FLOODPROOFING.COM.

FLOOD PROOF SYSTEM NOTES:

1. INSTALL AS PER MANUFACTURER SPECIFICATIONS.
2. INSTALLATION MUST COMPLY WITH FEMA FLOOD ELEVATION REQUIREMENTS APPLICABLE TO THE PROJECT LOCATION. REFER TO THE PROJECT ELEVATION CERTIFICATE FOR SPECIFIC ELEVATION DETAILS.

38 A6.3 ACCESS FLOOD PROOFING SYSTEM TYPICAL DETAIL.
SCALE: N.T.S.

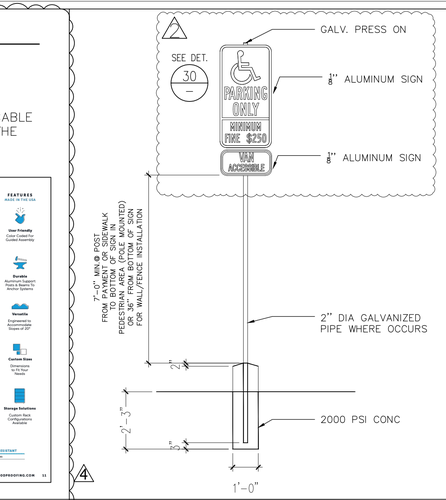

34 A6.3 ACCESSIBLE PARKING POLE MOUNTED #3
SCALE: N.T.S.

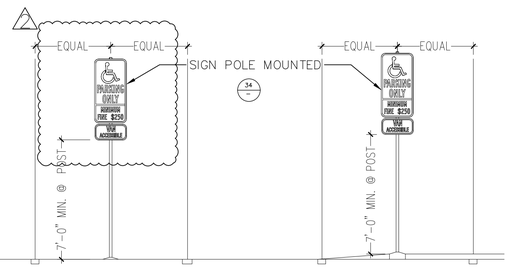

33 A6.3 VAN ACCESSIBLE PARKING ELEVATION
SCALE: N.T.S.

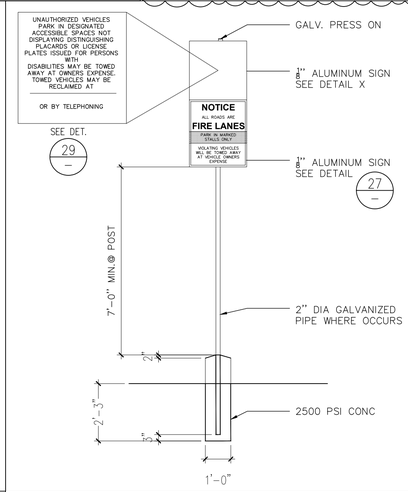

32 A6.3 SITE ENTRANCE SIGNAGE POLE
SCALE: N.T.S.

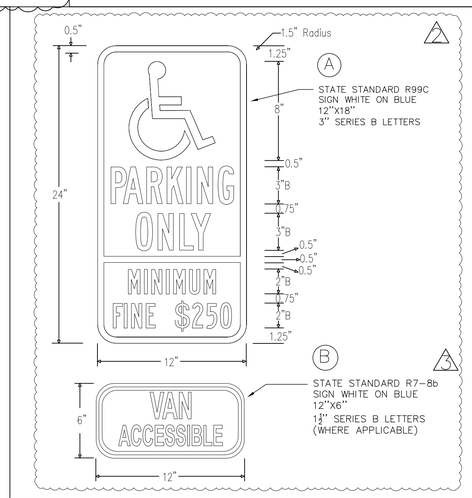

30 A6.3 ASSITIVE LEARNING SIGNAGE
SCALE: N.T.S.

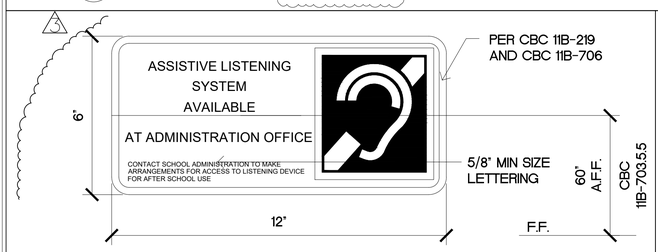

GENERAL NOTES:

1. PROVIDE ASSISTIVE LISTENING SYSTEMS IN ASSEMBLY AREAS INCLUDING CONFERENCE ROOMS, MEETING ROOMS AND CLASSROOMS.
2. MINIMUM REQUIRED NUMBER OF RECEIVERS IS 4% OF TOTAL SEATING OR OCCUPANT LOAD, AND IN NO CASE BE LESS THAN TWO: 157 SEATING x 4%= 6.28 (7 REQUIRED)
3. TWENTY-FIVE PERCENT MINIMUM OF RECEIVERS PROVIDED, BUT NO FEWER THAN TWO, SHALL BE HEARING-AID COMPATIBLE PER CBC 11B-706.3.
4. PROVIDE ASSISTIVE LISTENING SIGNAGE AT INTERIOR OF EACH MEETING ROOM AREA AS NOTED IN PLANS.
5. ASSISTIVE LISTENING DEVICES SHALL BE KEPT LOCKED UP AT ADMINISTRATION OFFICE, AND PRIOR ARRANGEMENTS SHALL BE MADE FOR EVENTS AFTER NORMAL BUSINESS HOURS W/ ADMINISTRATION OFFICE.
6. PORTABLE ASSISTIVE LISTENING SYSTEM BASED ON (RETEKESS T130 TOUR GUIDE SYSTEM, 1 BRIEF CASE, 1 TRANSMITTER, 15 RECEIVERS OR APPROVED EQUAL) TO BE PROVIDED BY CONTRACTOR.

25 A6.3 AVAILABLE ASSISTIVE–LISTENING SYSTEM SIGN
SCALE: N.T.S.

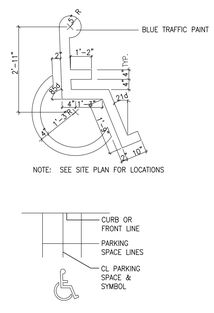

26 A6.3 HANDICAPPED SYMBOL
SCALE: N.T.S.

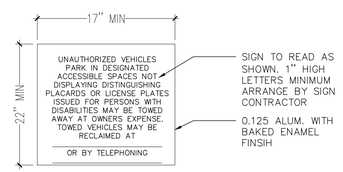

29 A6.3 SITE ENT. ACCESSIBLE PARKING SIGNAGE
SCALE: N.T.S.

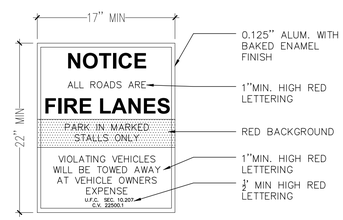

27 A6.3 SITE ENTRANCE FIRE LANE SIGNAGE
SCALE: N.T.S.

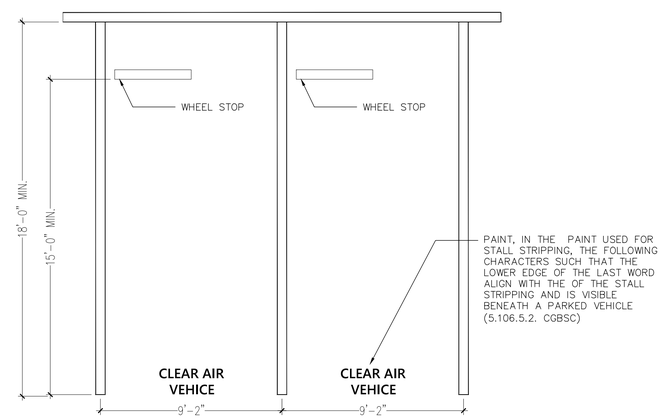

28 A6.3 CLEAR AIR VEHICLE PARKING PLAN
SCALE: N.T.S.

MUNOZ and ASSOCIATES ARCHITECTS
230 Capitol Street
Salinas, Ca. 93901
(831)920-0498

COPYRIGHT NOTICE

REGISTERED PROFESSIONAL ARCHITECT
SALVADOR F. MUNOZ
CA.18898
EXP. 11–30–2025
STATE OF CALIFORNIA

JOB NUMBER
002-2018

REV	DATE	DESCRIPTION
1	06-01-21	REVISION
2	09-23-2021	REVISION
3	01-12-2022	REVISION
4	12-4-2024	FLOODPROOF REVISION

APN
117-323-011-000

OUR LADY OF ASSUMPTION CHURCH
100 SALINAS ROAD
(PAJARO) WATSONVILLE, CA 95076

SHEET TITLE
ACCESIBILITY SIGNS AND DETAILS

SHEET NUMBER
A 6.3

DATE: 12-4-2024

TYPICAL NOTES: (SIGNS SHALL COMPLY WITH THE FOLLOWING)

1. ALL SINGS SHALL COMPLY WITH TITLE 24 AND CBC SECT. 11B–703
2. INTERNATIONAL SYMBOL OF ACCESSIBILITY TO CONFORM TO CBC–703.7.2.1
3. BRAIL – GRADE 2 DOTS SHALL BE $\frac{1}{10}$ INCH (2.54 MM) ON CENTER OF EACH CELL WITH $\frac{2}{10}$ INCH (5.04 MM) SPACE BETWEEN CELLS, MEASURED FROM THE SECOND COLUMN OF DOTS IN THE FIRST CELL TO THE FIRST COLUMN OF DOTS IN THE SECOND CELL DOTS SHALL BE RAISED A MINIMUM OF $\frac{1}{40}$ INCH (0.635 MM) ABOVE THE BACKGROUND. BRAILLE DOTS SHALL BE DOMED OR ROUNDED AND SHALL COMPLY WITH TABLE 11B–703.3.1.

CONTRAST – CHARACTERS AND SYMBOLS SHALL CONTRAST WITH THEIR BACKGROUND PER C 11B–703.5.1.

DOORWAYS LEADING TO TOILET ROOMS AND BATHING ROOMS SHALL BE IDENTIFIED BY GEOMETRIC SYMBOLS COMPLYING WITH SECTION 11B703.7.2.6. THE SYMBOL SHALL BE MOUNTED AT 58 INCHES MIN, AND 60 INCHES MAXIMUM ABOVE THE FINISH FLOOR OR GROUND SURFACE MEASURED FROM THE CENTER LINE OF THE SYMBOL WHERE A DOOR IS PROVIDED,THE SYMBOL SHALL BE MOUNTED WITH 1 INCH OF THE VERTICAL CENTER LINE OF THE DOOR.EDGE OF SINGS BE ROUNDED, CHAMFERED OR EASED. CORNERS OF SINGS SHALL HAVE A MINIMUM RADIUS OF $\frac{1}{8}$ INCH.

1. MEN' TOILET AND BATHING FACILITIES SHALL BE IDENTIFIED BY AN EQUILATERAL TRIANGLE, $\frac{1}{4}$ INCH (6.4 MM) THICK WITH EDGES 12 INCHES (305 MM) LONG AND A VERTEX POINTING UPWARD. THE TRIANGLE SYMBOL SHALL CONTRAST WITH THE DOOR, EITHER LIGHT ON A DARK BACKGROUND OR A DARK ON A LIGHT BACKGROUND, CBC SEC. 11B–703.7.2.6.1.
2. WOMEN'S TOILET AND BATHING FACILITIES SHALL BE IDENTIFIED BY AN EQUILATERAL TRIANGLE, $\frac{1}{4}$ INCH (6.4 MM) THICK WITH EDGES 12 INCHES (305 MM) LONG AND A VERTEX POINTING UPWARD. THE TRIANGLE SYMBOL SHALL CONTRAST WITH THE DOOR, EITHER LIGHT ON A DARK BACKGROUND OR A DARK ON A LIGHT BACKGROUND, CBC SEC. 11B–703.7.2.6.1.

46 A6.4 TYPICAL SIGNAGE NOTES
SCALE: N.T.S.

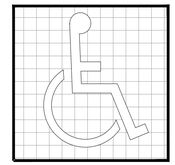

(A) SYMBOL PROPORTIONS

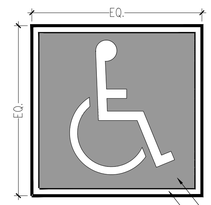

INTERNATIONAL SYMBOL OF ACCESSIBILITY (ISA)

BLUE BACKGROUND
WHITE

1. ISA SHALL COMPLY WITH FIGURE CBC IIB–703.7.2.1
2. THE SYMBOL SHALL CONSIST OF A WHITE FIGURE ON A BLUE BACKGROUND. THE BLUE SHALL BE COLOR NO.15090 IN FEDERAL STANDARD 595B. (TYP. U.O.N.)
3. MIN. 5"X5" SHALL BE LOCATED AT PRIARY ENTRACE TOP BUILDING EITHER AS DECAL ON THE DOOR LEAF 12" MIN. A.F.F., LEVER SIDE OR ON WALL SURFACE 60" A.F.F. TO THE CENTER OF SIGN AND 15" FROM EDGE OF DOOR TO NEAREST EDGE OF SIGN.
4. MIN. 36"X36" PAINTED SYMBOL ON PAVEMENT BEYOND ACCESSIBLE PARKING STALL(S). LOCATED IN STALL SO IT IS VISBLE BY A TRAFFIC ENFORCEMENT OFFICER WHEN A VEHICLE IS PROPERLY PARKED IN THE SPACE (CENTERED AT ENTRANCE TO STALL).

NOTE:

AT EVERY PRIMARY PUBLIC ENTRANCE AND AT EVERY MAJOR JUNCTION ALONG OR LEADING TO AN ACCESSIBLE ROUT OF TRAVEL, THERE SHAL BE A SIGN DISPLAYING THE INTERNATIONAL SYMBOL OF ACCESSIBILITY. SIGNS SHALL INDICATE THE DIRECTION TO ACCESSIBLE BUILDING ENTRANCES AND FACILITIES AND SHALL COMPLY WITH CBC SEC 11B–708.

45 A6.4 BUILDING ACCESSIBILITY
SCALE: N.T.S.

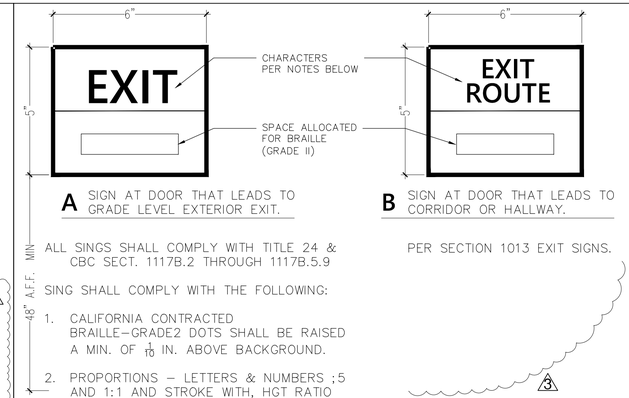

A SIGN AT DOOR THAT LEADS TO GRADE LEVEL EXTERIOR EXIT.

B SIGN AT DOOR THAT LEADS TO CORRIDOR OR HALLWAY.

ALL SINGS SHALL COMPLY WITH TITLE 24 & CBC SECT. 1117B.2 THROUGH 1117B.5.9

SING SHALL COMPLY WITH THE FOLLOWING:

1. CALIFORNIA CONTRACTED BRAILLE–GRADE2 DOTS SHALL BE RAISED A MIN. OF $\frac{1}{10}$ IN. ABOVE BACKGROUND.
2. PROPORTIONS – LETTERS & NUMBERS ;5 AND 1:1 AND STROKE WITH, HGT RATIO BETW. 1:5 & 1:10.
3. CONTRAST – CHARACTERS & SYMBOLS SHALL CONTRAST WITH THEIR BACKGROUNDS PER CBC 1114.B.5.4.
4. ISA TO CONFORM TO CBC 1117B2.1 AND FIGURE 11B–6

PER SECTION 1013 EXIT SIGNS.

44 A6.4 EXIST TACTILE SIGNAGE

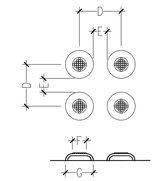

	MIN.	MAX.
D	1.60"	2.40"
D	0.65"	1.50"
D	0.45"	0.80"
D	0.90"	1.40"

43 A6.4 TRUNCATED DOME SPACING
SCALE: N.T.S.

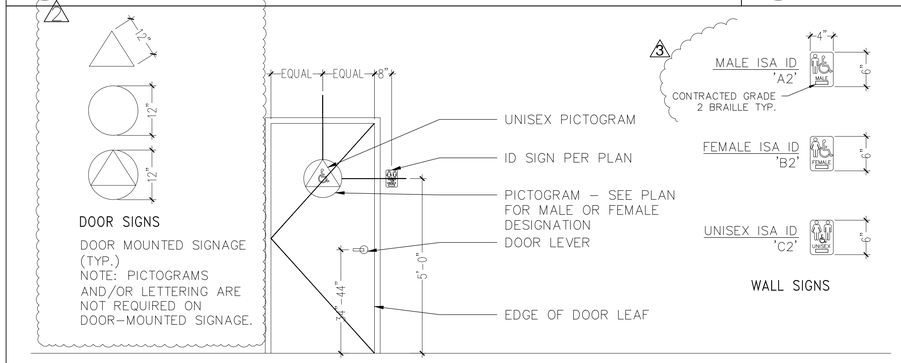

DOOR SIGNS

DOOR MOUNTED SIGNAGE (TYP.)
NOTE: PICTOGRAMS AND/OR LETTERING ARE NOT REQUIRED ON DOOR–MOUNTED SIGNAGE.

WALL SIGNS

NOTE:

AT EVERY PRIMARY PUBLIC ENTRANCE AND AT EVERY MAJOR JUNCTION ALONG OR LEADING TO AN ACCESSIBLE ROUT OF TRAVEL, THERE SHAL BE A SIGN DISPLAYING THE INTERNATIONAL SYMBOL OF ACCESSIBILITY. SIGNS SHALL INDICATE THE DIRECTION TO ACCESSIBLE BUILDING ENTRANCES AND FACILITIES AND SHALL COMPLY WITH CBC SEC 11B–708.

42 A6.4 ACCESSIBILITY SIGNAGE
SCALE: N.T.S.

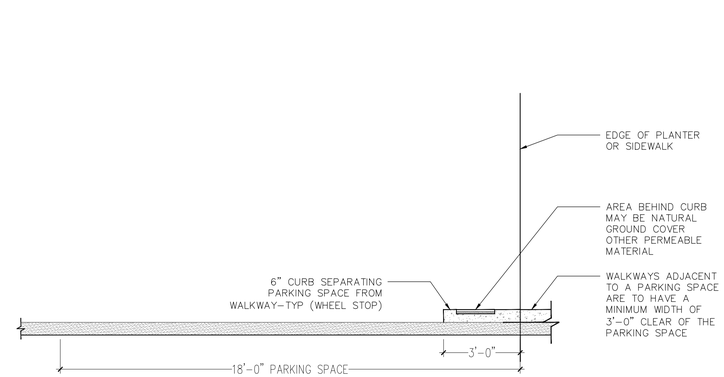

41 A6.4 OPTIONAL WHEEL STOP DETAIL
SCALE: N.T.S.

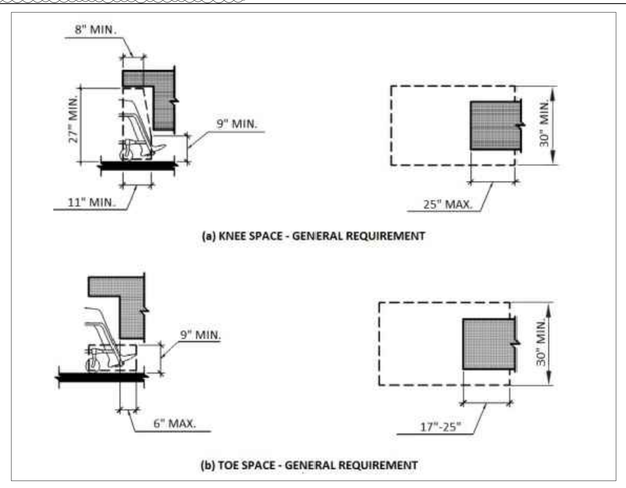

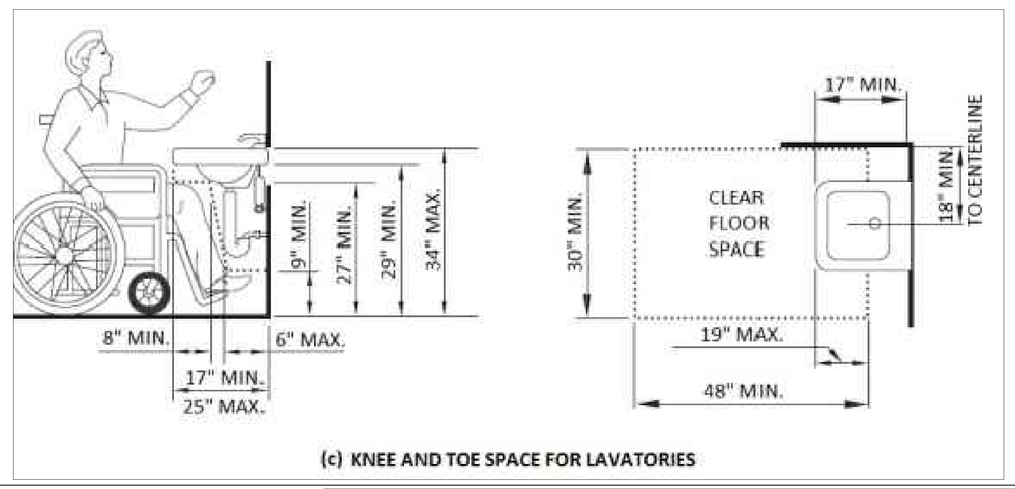

38 A6.4 FIGURE 11A–9D – KNEE AND TOE SPACE
SCALE: N.T.S.

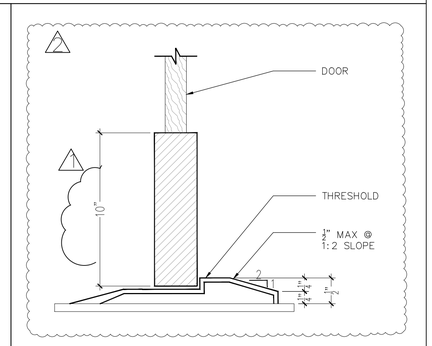

NOTE:
THE BOTTOM 10" OF ALL DOORS IN THE PATH OF TRAVEL EXCEPT AUTOMATIC AND SLIDING DOORS, SHALL HAVE A SMOOTH, UNINTERRUPTED SURFACE TO ALLOW THE DOOR TO BE OPEN BY WHEELCHAIR FOOT REST WITHOUT CREATING A TRIP OR HAZARDOUS CONDITION . PER CBC SEC. 11B–404.2.10

39 A6.4 THRESHOLD DETAIL WITH KICK PLATE
SCALE: N.T.S.

MUNOZ and ASSOCIATES ARCHITECTS
230 Capitol Street
Salinas, Ca. 93901
(831)920-0488 office@munozarchitects.com
www.munozarchitects.com

COPYRIGHT NOTICE

REGISTERED PROFESSIONAL ARCHITECT
SALVADOR F. MUNOZ
CA.18898
EXP. 11–30–2025
CALIFORNIA

JOB NUMBER
002-2018

REV	DATE	DESCRIPTION
1	06-01-21	REVISION
2	09-23-2021	REVISION
3	12-4-2024	FLOODPROOF REVISION

APN
117-323-011-000

OUR LADY OF ASSUMPTION CHURCH
100 SALINAS ROAD
(PAJARO) WATSONVILLE, CA 95076

SHEET TITLE
ACCESIBILITY SIGNS AND DETAILS

SHEET NUMBER
A 6.4

DATE: 12-4-2024

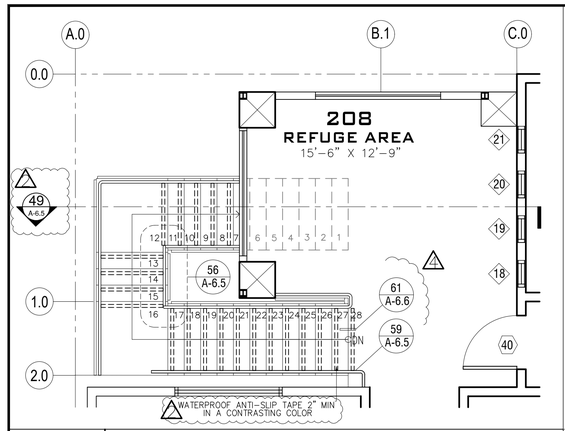

53	EXTERIOR STAIRCASE UPPER FLOOR PLAN
1/4"=1' - 0"	

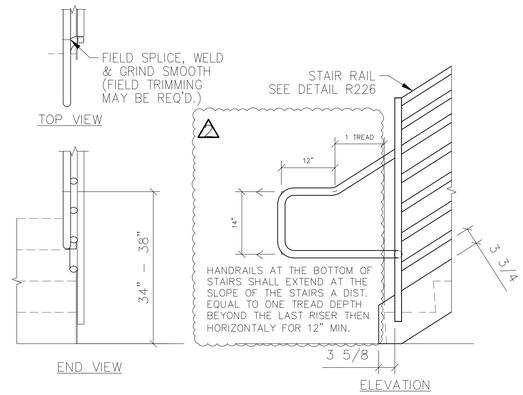

54	STARTER RAIL WITH OUT LEVEL OFF HANDRAIL
3/4"=1' - 0"	1. POST AND TOP LINE MATERIAL TO BE HSS 1 1/2" x 1 1/2" x 0.120" 2. HANDRAIL & MID LINE MATERIAL TO BE 1 1/2"~ (1.66" O.D.) PIPE

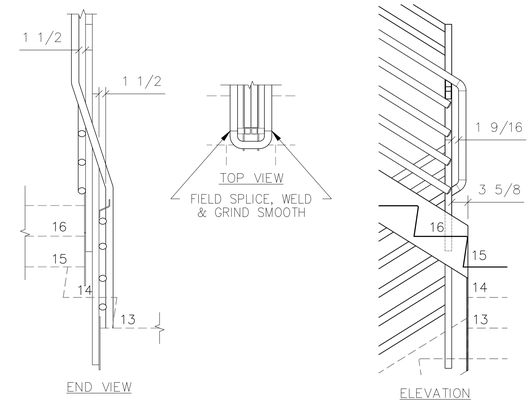

55	INTERIOR STAIR HANDRAIL DETAIL
3/4"=1' - 0"	1. POST AND TOP LINE MATERIAL TO BE HSS 1 1/2" x 1 1/2" x 0.120" 2. HANDRAIL & MID LINE MATERIAL TO BE 1 1/2"~ (1.66" O.D.) PIPE

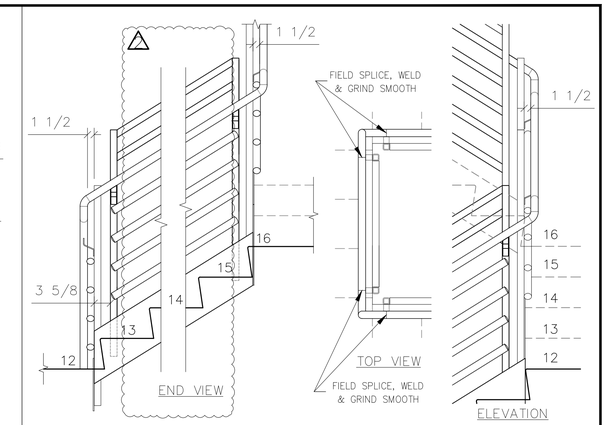

56	EXTERIOR STAIR HANDRAIL DETAIL
3/4"=1' - 0"	1. POST AND TOP LINE MATERIAL TO BE HSS 1 1/2" x 1 1/2" x 0.120" 2. HANDRAIL & MID LINE MATERIAL TO BE 1 1/2"~ (1.66" O.D.) PIPE

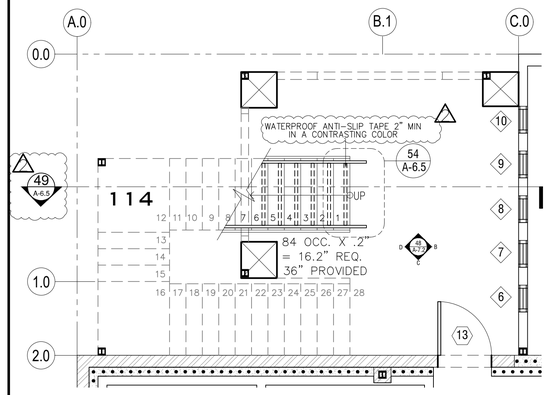

52	EXTERIOR STAIRCASE LOWER FLOOR PLAN
1/4"=1' - 0"	

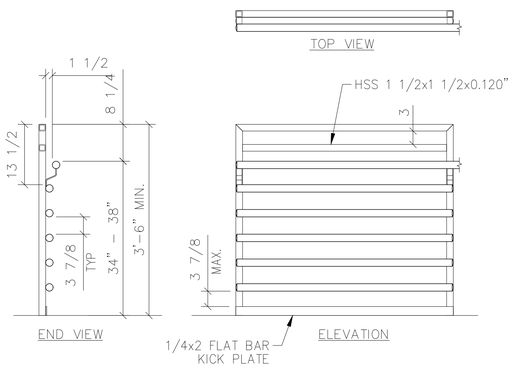

57	STANDARD GUARD RAIL WITH HANDRAIL
3/4"=1' - 0"	1. POST AND TOP LINE MATERIAL TO BE HSS 1 1/2" x 1 1/2" x 0.120" 2. HANDRAIL & MID LINE MATERIAL TO BE 1 1/2"~ (1.66" O.D.) PIPE

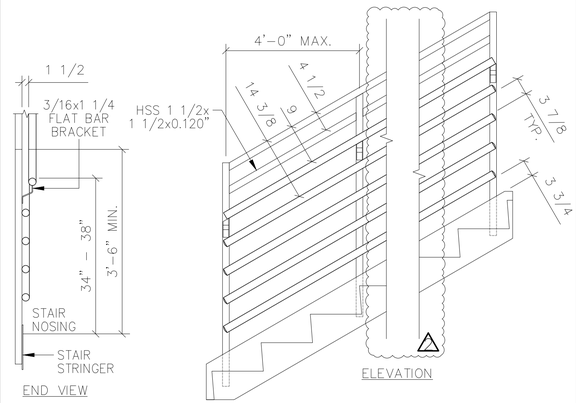

58	STAIR RAIL CONSTRUCTION
3/4"=1' - 0"	1. POST AND TOP LINE MATERIAL TO BE HSS 1 1/2" x 1 1/2" x 0.120" 2. HANDRAIL & MID LINE MATERIAL TO BE 1 1/2"~ (1.66" O.D.) PIPE

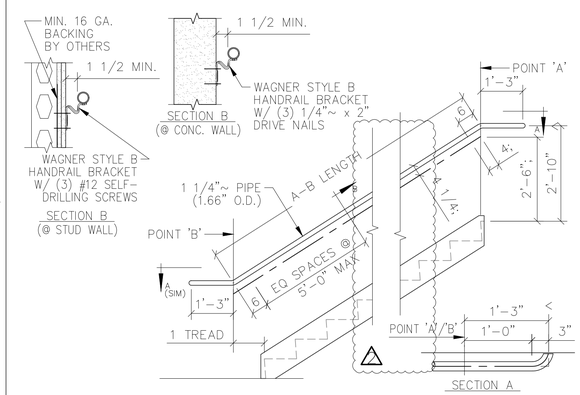

59	HANDRAIL
N.T.S.	1. HANDRAIL TO BE 1 1/2"~ (1.66" O.D.) PIPE 2. STANDARD WAGNER STYLE B HANDRAIL BRACKET

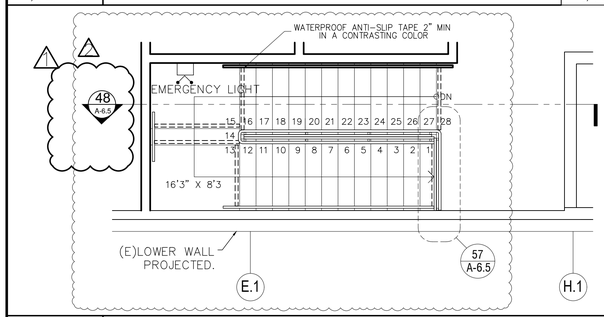

51	INTERIOR STAIRCASE UPPER FLOOR PLAN
1/4"=1' - 0"	

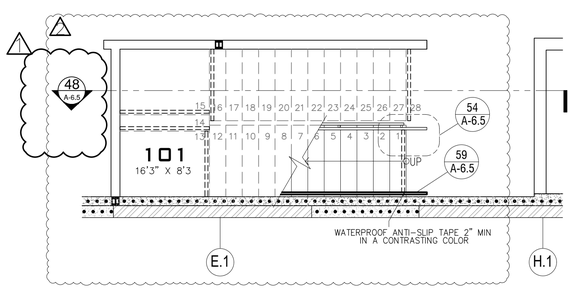

50	INTERIOR STAIRCASE LOWER FLOOR PLAN
1/4"=1' - 0"	

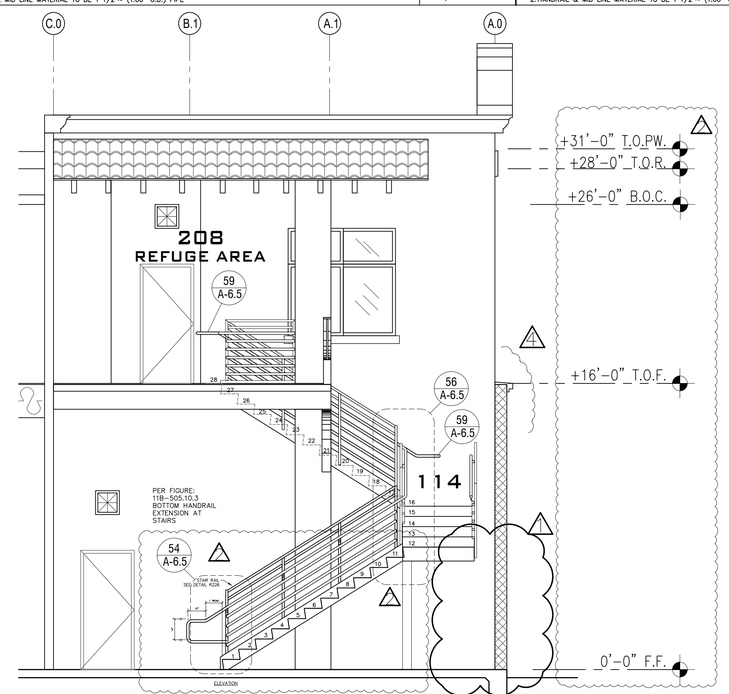

49	EXTERIOR STAIRCASE SECTION
1/4"=1' - 0"	

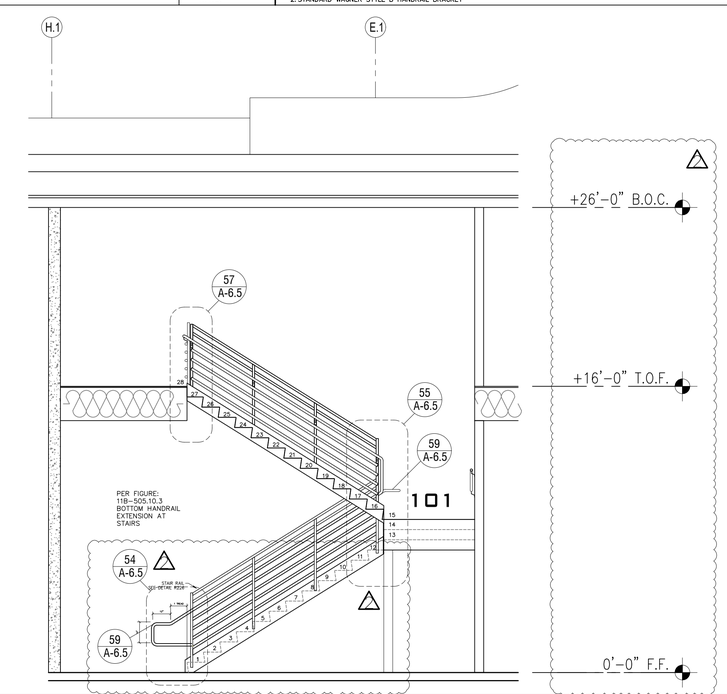

48	INTERIOR STAIRCASE SECTION
1/4"=1' - 0"	

MUNOZ and ASSOCIATES ARCHITECTS
230 Capitol Street
Salinas, Ca. 93901
e-mail: salvador@munozarchitects.com
www.munozarchitects.com
(831)320-0498

COPYRIGHT NOTICE

REGISTERED PROFESSIONAL ARCHITECT
SALVADOR F. MUNOZ
CA.18898
EXP. 11-30-2025
CALIFORNIA

JOB NUMBER
002-2018

REV	DATE	DESCRIPTION
1	06-01-21	REVISION
2	09-23-2021	REVISION
3	12-4-2024	FLOODPROOF REVISION

APN
117-323-011-000

OUR LADY OF ASSUMPTION CHURCH
100 SALINAS ROAD
(PAJARO) WATSONVILLE, CA 95076

SHEET TITLE
STAIRS DETAILS

SHEET NUMBER
A 6.5

DATE: 12-4-2024

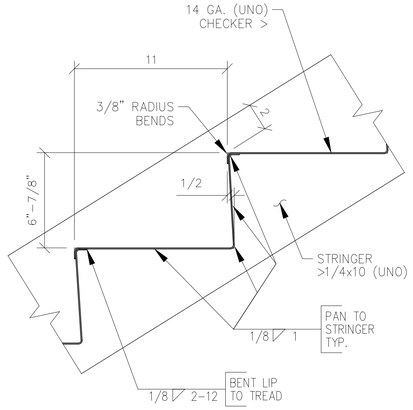

60	TREAD / RISER CONSTRUCTION
1/4"=1' – 0"	

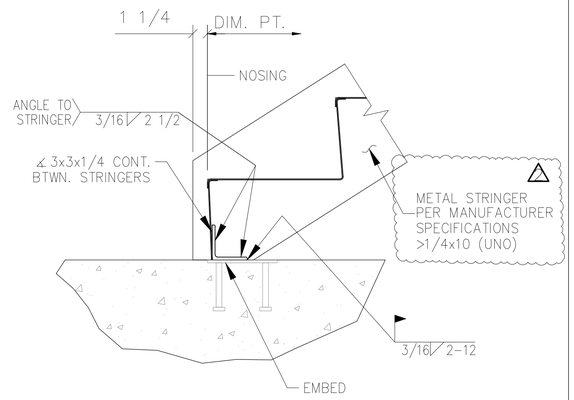

61	CONNECTION TO CONCRETE SLAB WITH EMBED
1/4"=1' – 0"	1. SEE 60 FOR TREAD / RISER CONSTRUCTION

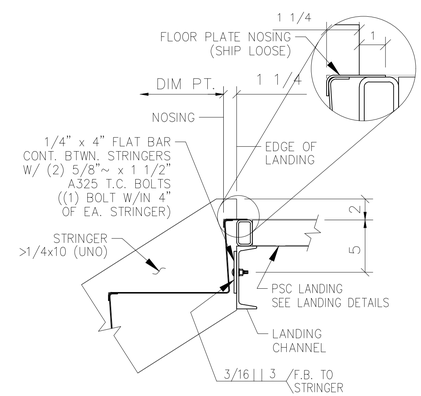

62	STANDARD TOP CONNECTION TO STEEL LANDING
1/4"=1' – 0"	1. SEE 60 FOR TREAD / RISER CONSTRUCTION 2. SEE 64 FOR LANDING CONSTRUCTION

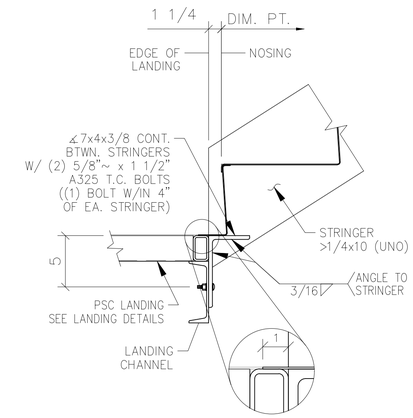

63	STANDARD BOTTOM CONNECTION TO STEEL LANDING
1/4"=1' – 0"	1. SEE 60 FOR TREAD / RISER CONSTRUCTION 2. SEE 64 FOR LANDING CONSTRUCTION

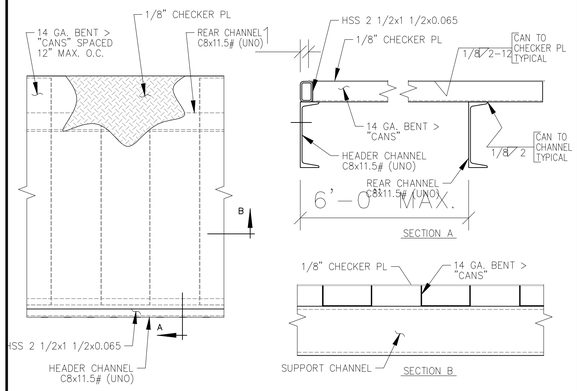

64	LANDING CONSTRUCTION
1/4"=1' – 0"	

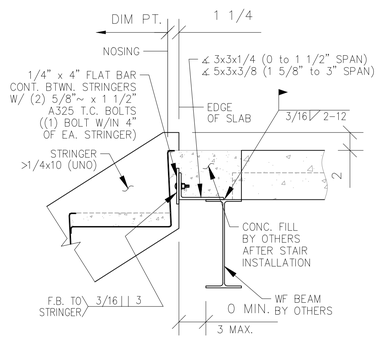

61	STD. TOP CONNECTION TO STRUCTURAL STEEL
N.T.S.	1. SEE 60 FOR TREAD / RISER CONSTRUCTION

NOTE: THIS STAIRS ARE FABRICATED AND INSTALLED
PER MANUFACTURER SPECIFICATIONS

PACIFIC STAIR
CORPORATION®

8690 Stair Way NE Salem, OR 97305
www.pacificstair.com | 503.390.8305

MUNOZ and ASSOCIATES
ARCHITECTS
230 Capitol Street
Salinas, Ca. 93901
salvador@munozandassociates.com
www.munozarchitects.com
(831)320-0488

COPYRIGHT NOTICE

REGISTERED PROFESSIONAL ARCHITECT
SALVADOR F. MUNOZ
CA.18898
EXP. 11-30-2025
CALIFORNIA

JOB NUMBER
002-2018

REV	DATE	DESCRIPTION
1	06-01-21	REVISION
2	09-23-2021	REVISION
3	12-4-2024	FLOODPROOF REVISION

APN
117-323-011-000

OUR LADY OF
ASSUMPTION CHURCH

100 SALINAS ROAD
(PAJARO) WATSONVILLE, CA 95076

SHEET TITLE
STAIRS DETAILS

SHEET NUMBER
A 6.6

DATE: 12-4-2024

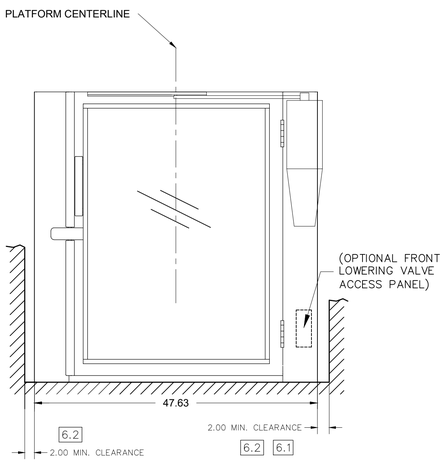

SEE ALSO DETAIL 2 & 3

1 WHEELCHAIR LIFT FRONT END ELEVATION

1/4"=1' – 0"

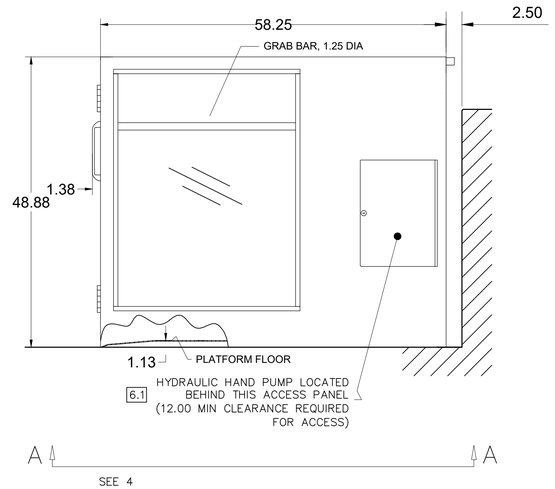

2 WHEELCHAIR LIFT RIGHT SIDE ELEVATION

1/4"=1' – 0"

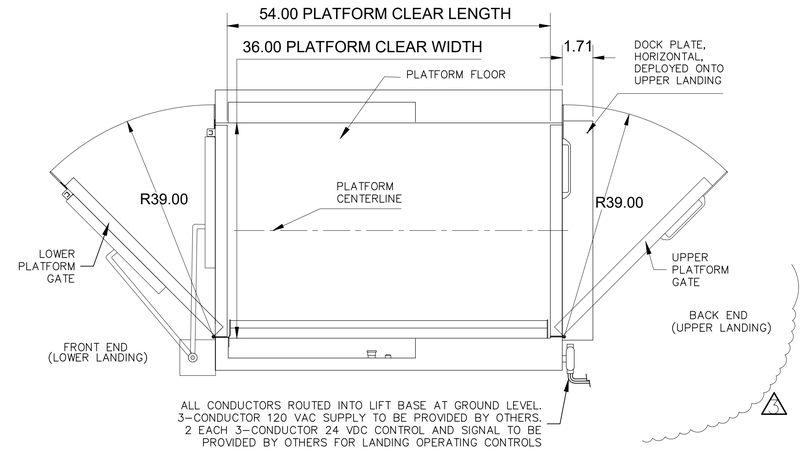

3 WHEELCHAIR LIFT PLAN VIEW

1/4"=1' – 0"

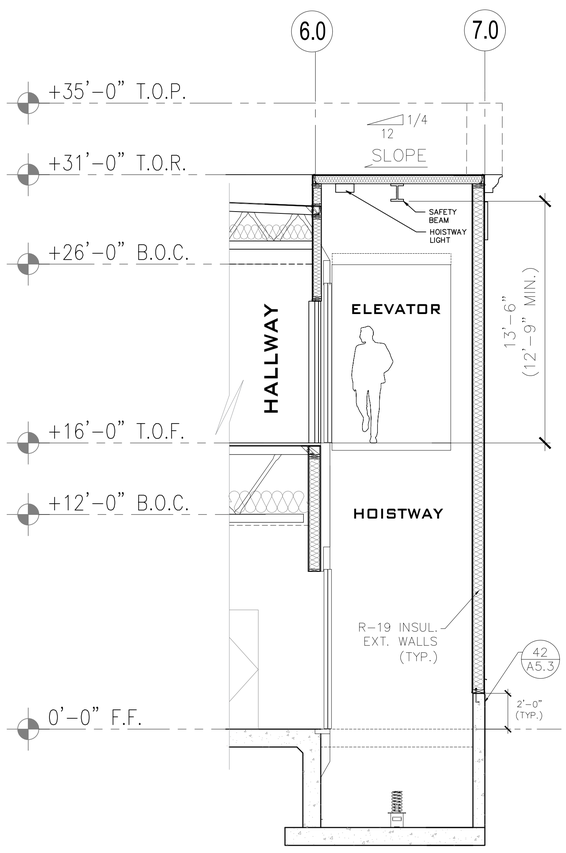

6 ELEVATOR SECTION

1/4"=1' – 0"

NOTES UNLESS OTHERWISE SPECIFIED:

1. DESCRIPTION: ASCENSION PROTEGE 5442F MODEL SERIES VERTICAL WHEELCHAIR LIFT.

2. CHARACTERISTICS:
2.1 OCCUPANCY: (1) PERSON.
2.2 MAXIMUM LOAD: 900 POUNDS.
2.3 AVERAGE VERTICAL SPEED: 5 FEET PER MINUTE.
2.4 VERTICAL TRAVEL: 4 TO 42 INCHES.
2.5 WEIGHT: 850 POUNDS.
2.6 FINISH: BLACK POWDER COAT (CUSTOM COLOR AVAILABLE).

3. FEATURES:
3.1 OPERATING MECHANISM: DIRECT–PLUNGER HYDRAULIC. MEETS PLATFORM SAFETY REQUIREMENTS PER ASME A18.1 §2.8.8.
3.2 UNIT IS EQUIPPED WITH HAND PUMP FOR MANUAL OPERATION.
3.3 FRONT GATE INTERLOCK PREVENTS OPERATION ABOVE 2" UNLESS GATE IS LOCKED. GATE ONLY UNLOCKS AT LOWER LANDING.
3.4 GATE SENSORS PREVENT OPERATION UNLESS GATES ARE CLOSED.
3.5 PLATFORM FLOOR IS SLIP–RESISTANT.
3.6 UNIT IS EQUIPPED WITH EMERGENCY STOP BUTTON THAT, WHEN PRESSED, STOPS OPERATION OF THE LIFT AND SOUNDS AN ALARM.
3.7 UNDERSIDE OF PLATFORM IS GUARDED BY A SAFETY PAN THAT STOPS OPERATION OF THE LIFT WHEN DOWNWARD MOVEMENT IS OBSTRUCTED.

4. ELECTRICAL & CONTROLS:
4.1 120 VAC, 60 HZ, SINGLE PHASE, 15 AMP MINIMUM SERVICE LINE.
4.2 ALL CONTROL CIRCUITS POWERED BY 24 VDC POWER SUPPLY.
4.3 LANDING OPERATING CONTROLS PROVIDED IN 1.88" DEEP SINGLE GANG HANDY BOXS FOR REMOTE MOUNTING.

5. UNIT MEETS APPLICABLE REQUIREMENTS OF ADAAG, ASME 17.1 1996 OR OLDER, ASME A18.1, AND ANSI A117.1.

6. REQUIRED CLEARANCES:
6.1 WHERE STANDBY POWER OR BATTERY BACKUP IS NOT PROVIDED, EITHER 12.00" MINIMUM CLEARANCE FOR HAND PUMP ACCESS SHALL BE PROVIDED OR FRONT LOWERING VALVE (FLV) OPTION SHALL BE SELECTED. CALIFORNIA REQUIRES BOTH HAND PUMP ACCESS (OR FLV) AND BATTERY BACKUP FOR ALL INSTALLATIONS.
6.2 WHERE AN OBSTRUCTION OR SURFACE LOCATED WITHIN 12" OF PLATFORM PRESENTS A PINCHING, SHEARING, OR CRUSHING HAZARD, A SMOOTH CONTINUOUS SURFACE SHALL BE PROVIDED EXTENDING FROM THE LOWER LANDING TO 42" MINIMUM ABOVE UPPER LANDING.
6.3 MANUVERING CLEARANCES IAW ADAAG SHALL BE PROVIDED AT EACH LANDING FOR BOTH ENTRANCES TO THE LIFT.

7. PROVISIONS BY OTHERS:
7.1 FLOOR FLAT AND LEVEL WITHIN 1/2" AND CAPABLE OF SUPPORTING UNIT WEIGHT WITH RATED LOAD.
7.2 STANDARD AND EMERGENCY LIGHTING.
7.3 ANCHORS TO SECURE LIFT TO GROUND.

8. STANDARD GATE HINGING SHOWN; MIRROR GATES AND DIMENSIONS ABOUT PLATFORM CENTERLINE FOR OTHER HINGE CONFIGURATIONS.

5 NOTES

N.T.S.

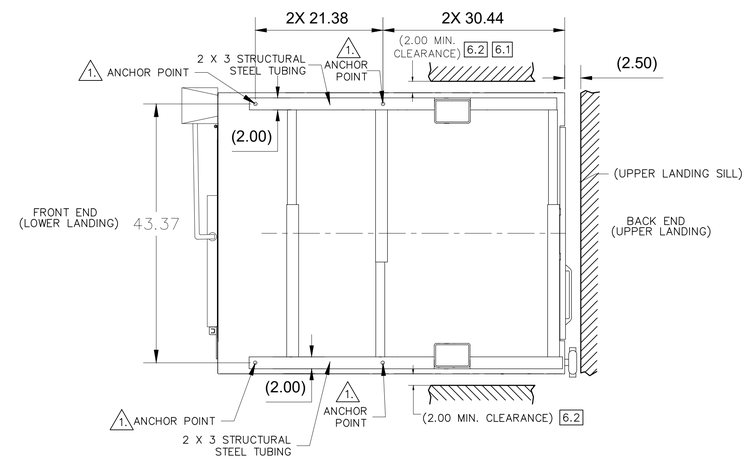

VIEW A–A (BOTTOM VIEW) FROM 2

1. ANCHOR POINTS
ALL ANCHOR HOLES ø.56 THRU WITH ø1.13 CLEARANCE FAR SIDE

4 WHEELCHAIR LIFT BOTTOM VIEW

1/4"=1' – 0"

ELEVATOR NOTES:

1. INSTALL ELEVATOR MOD. SCHINDLER OPTIMIZED 3300 MRL TRACTIONAS PER MANUFACTURER SPECIFICATIONS.
2. NOTE CALIFORNIA HOISTWAY DIMENSIONS AS PER MANUFACTURER SPECS.

MUNOZ and ASSOCIATES ARCHITECTS
230 Capitol Street
Salinas, Ca. 93901
salvador.munoz@sfmunozarchitects.com
www.sfmunozarchitects.com
(831)320-0488

COPYRIGHT NOTICE

REGISTERED PROFESSIONAL ARCHITECT
SALVADOR F. MUNOZ
CA.18898
EXP. 11–30–2025
CALIFORNIA, USA

JOB NUMBER
002-2018

REV	DATE	DESCRIPTION
1	06-01-21	REVISION
2	09-23-2021	REVISION
3	12-07-2021	REVISION
4	12-4-2024	FLOOD PROOF REVISION

APN
117-323-011-000

OUR LADY OF ASSUMPTION CHURCH
100 SALINAS ROAD
(PAJARO) WATSONVILLE, CA 95076

SHEET TITLE
ELEVATOR SECTION & CHAIR LIFT DETAILS

SHEET NUMBER
A 6.7

DATE: 12-4-2024

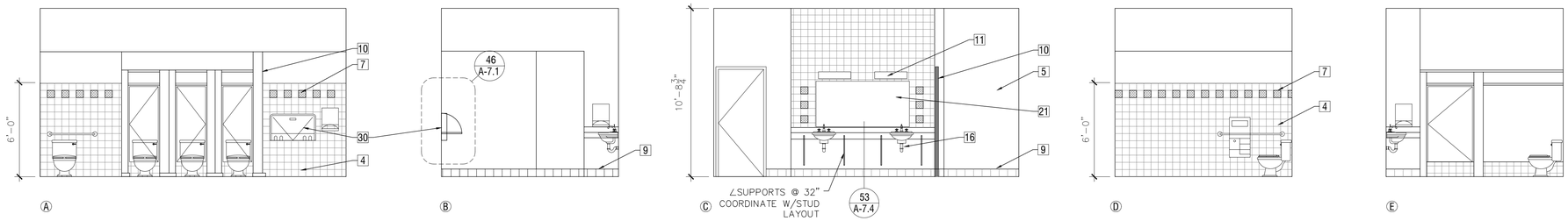

NOTE:
SEE SHEET A-2.5 FOR TOILET
ACCESORY SHEDULE

39 (N) WOMEN'S TOILET ROOM UPPER FLOOR PLAN
1/4"=1' - 0"

KEY NOTES

- 2 MOP RACK
- 3 FLOOR MOUNTED SERVICE SINK
- 4 TILE
- 5 GYPSUM BOARD
- 6 BASE
- 7 ACCENT TILE
- 9 CERAMIC TILE COVED BASE
- 10 TOILET PARTITION
- 11 LIGHT FIXTURE
- 16 ACCESSIBLE SINK (6 1/2" DEEP MAX) WRAP P-TRAP & HW SUPPLY PIPING @ SINK W/ INSULATION
- 21 MIRROR
- 23 (N.I.C) SHELVING
- 25 WATER HEATER (N.I.C)
- 29 TOILET ROOM SIGNAGE
- 30 BABY CHANGING TABLE MOUNT AT 36" A.F.F. SEE DETAIL - 46

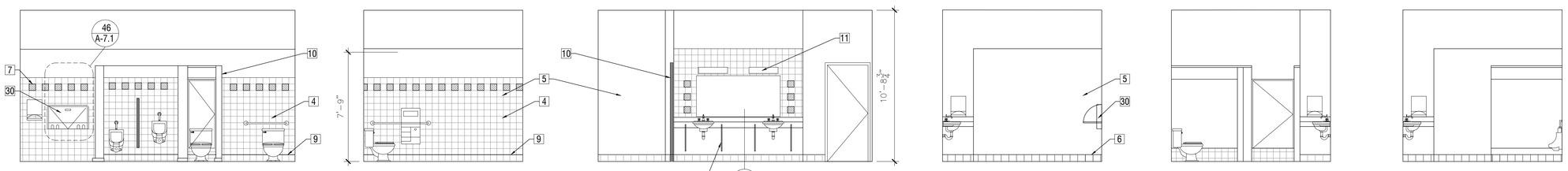

NOTE:
SEE SHEET A-2.5 FOR TOILET
ACCESORY SHEDULE

40 (N) MEN'S TOILET ROOM UPPER FLOOR PLAN
1/4"=1' - 0"

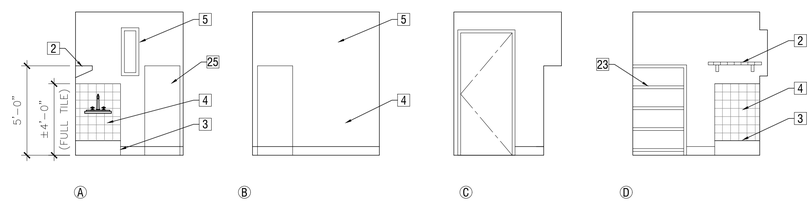

41 (N) JANITOR'S UPPER FLOOR PLAN
1/4"=1' - 0"

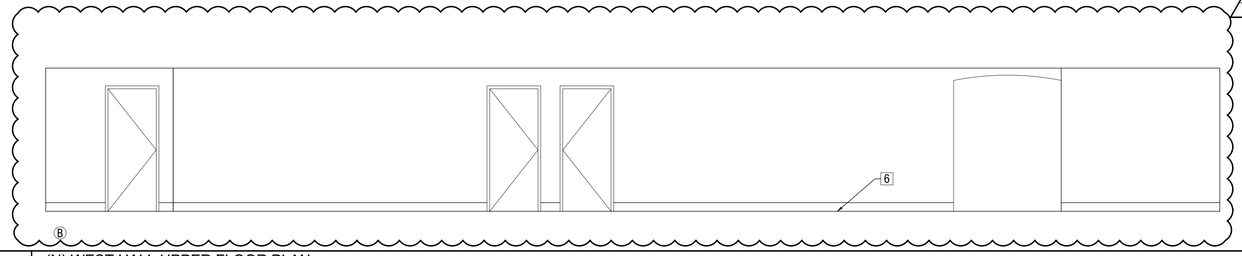

42 (N) WEST HALL UPPER FLOOR PLAN
1/4"=1' - 0"

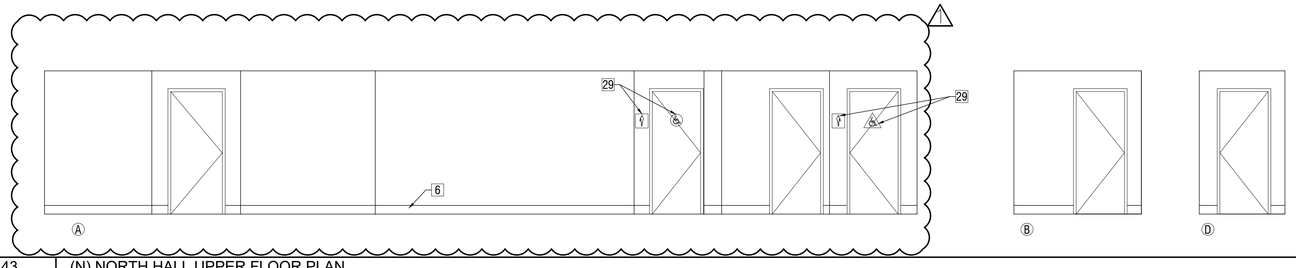

43 (N) NORTH HALL UPPER FLOOR PLAN
1/4"=1' - 0"

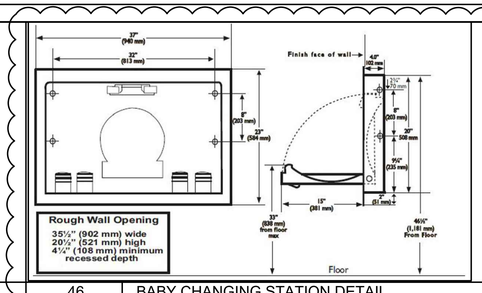

46 BABY CHANGING STATION DETAIL
N.T.S.

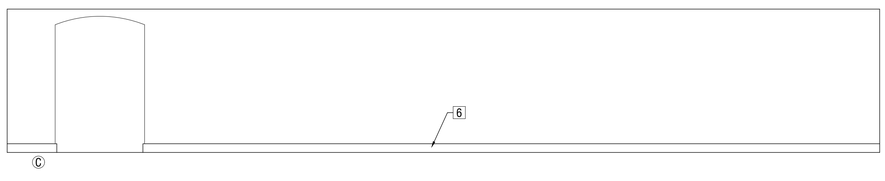

44 (N) SOUTH HALL UPPER FLOOR PLAN
1/4"=1' - 0"

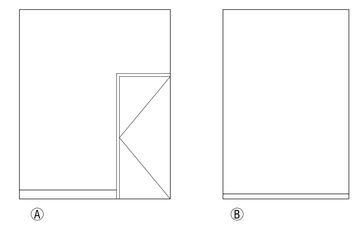

45 ELECTRICAL & MECHANICAL RM. UPPER FLOOR PLAN
1/4"=1' - 0"

MUNOZ and ASSOCIATES ARCHITECTS
230 Capitol Street
Salinas, Ca. 93901
salvador@munozandassociatesarchitects.com
www.smunozarchitects.com
(831)320-0498

COPYRIGHT NOTICE

REGISTERED PROFESSIONAL ARCHITECT
SALVADOR F. MUNOZ
CA.18898
EXP. 11-30-2025
CALIFORNIA, USA

JOB NUMBER
002-2018

REV	DATE	DESCRIPTION
1	06-01-21	REVISION
2	09-23-2021	REVISION
3	12-4-2024	FLOODPROOF REVISION

APN
117-323-011-000

OUR LADY OF
ASSUMPTION CHURCH

100 SALINAS ROAD
(PAJARO) WATSONVILLE, CA 95076

SHEET TITLE
INTERIOR ELEVATIONS

SHEET NUMBER
A 7.1

DATE: 12-4-2024

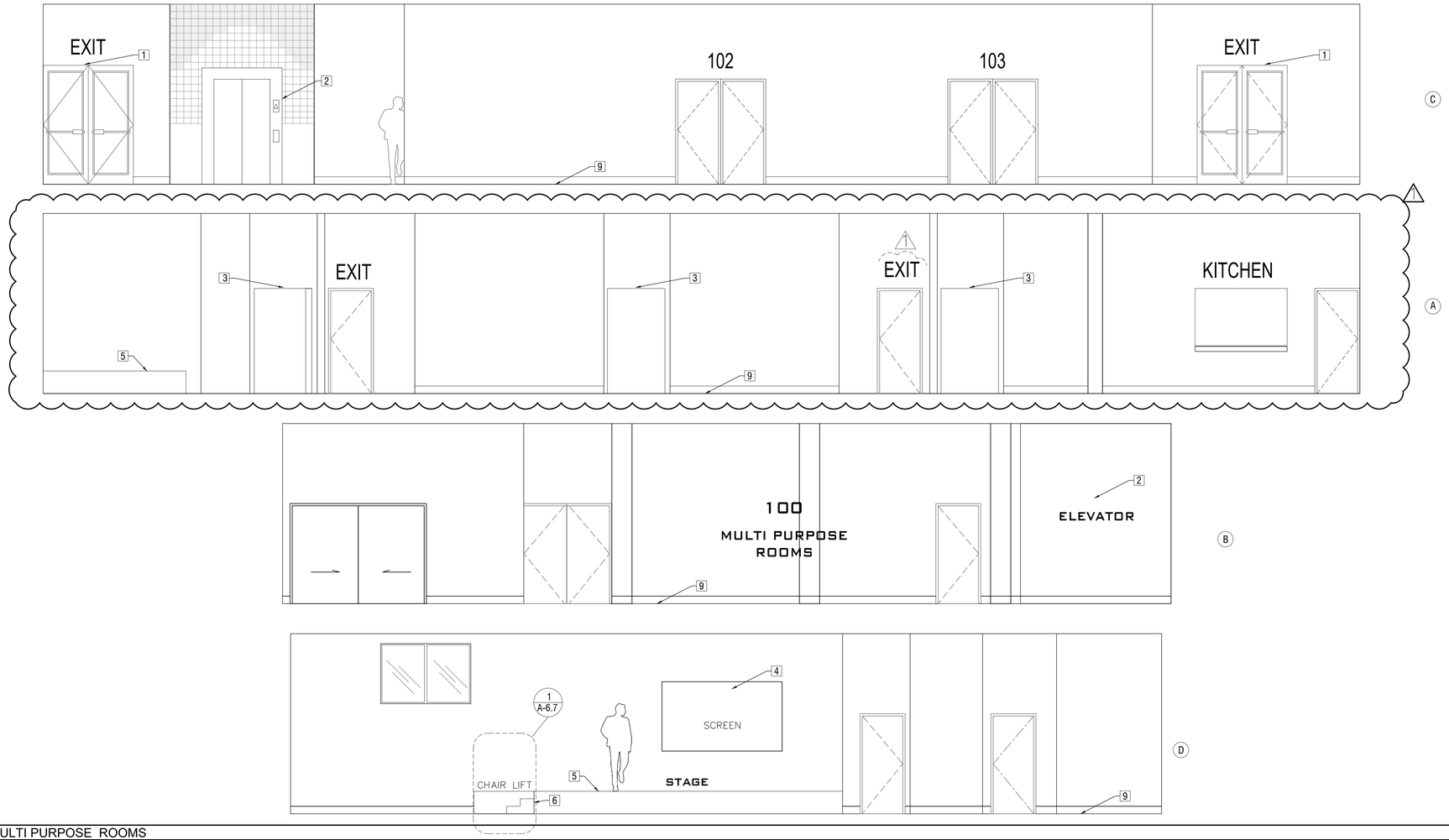

46 MULTI PURPOSE ROOMS

1/4"=1' - 0"

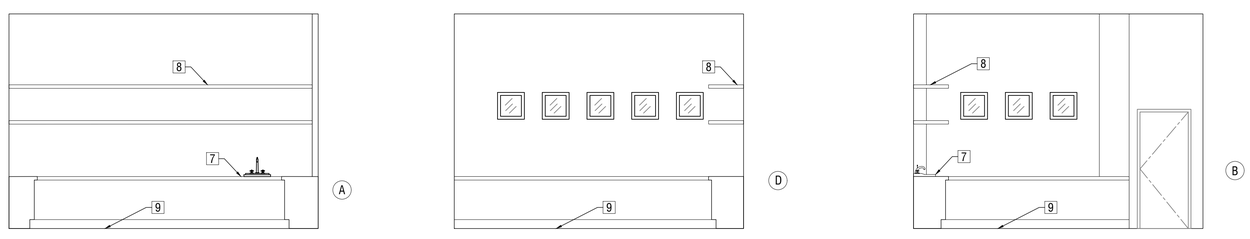

47 MAINTENANCE ROOM

1/4"=1' - 0"

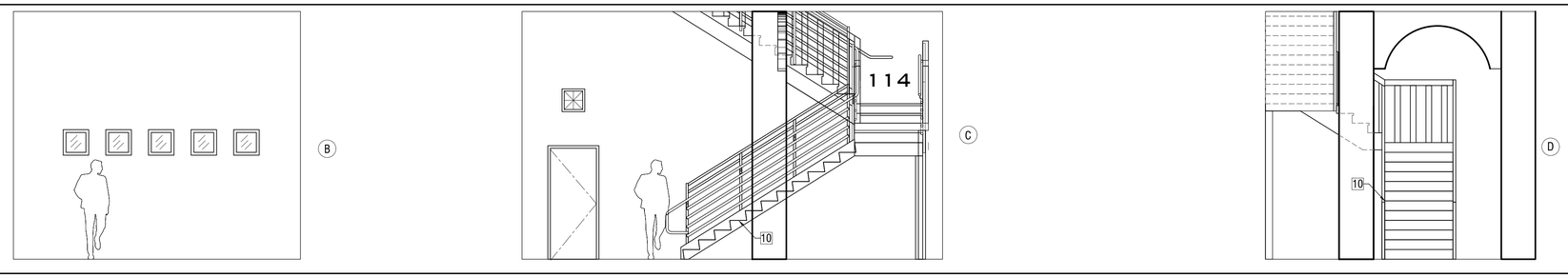

48 EXTERIOR STAIRS

1/4"=1' - 0"

KEY NOTES

1. EXIT DOOR TO PARKING
2. ELEVATOR
3. MOVABLE SEPARATION WALLS
4. SCREEN PROJECTION
5. STAGE
6. STAIR STAGE
7. SINK
8. SHELF
9. CERAMIC TILE COVED BASE
10. EXTERIOR STAIRS – SEE DETAIL A 6.5

MUNOZ and ASSOCIATES ARCHITECTS
230 Capitol Street
Salinas, Ca. 93901
salvador@munozandassociates.com
www.smunozarchitects.com
(831)320-0498

COPYRIGHT NOTICE

REGISTERED PROFESSIONAL ARCHITECT
SALVADOR F. MUNOZ
CA.18898
EXP. 11-30-2025
CALIFORNIA

JOB NUMBER
002-2018

REV	DATE	DESCRIPTION
1	06-01-21	REVISION
2	09-23-2021	REVISION
3	12-4-2024	FLOODPROOF REVISION

APN
117-323-011-000

OUR LADY OF ASSUMPTION CHURCH

100 SALINAS ROAD
(PAJARO) WATSONVILLE, CA 95076

SHEET TITLE
INTERIOR ELEVATIONS

SHEET NUMBER
A 7.2

DATE: 12-4-2024

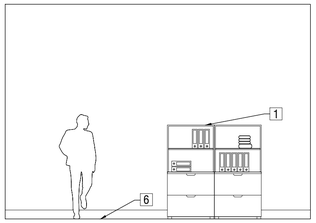

Ⓐ

Ⓑ

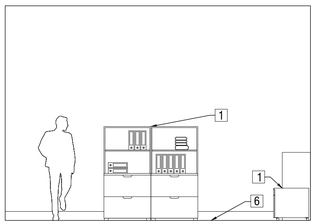

Ⓒ

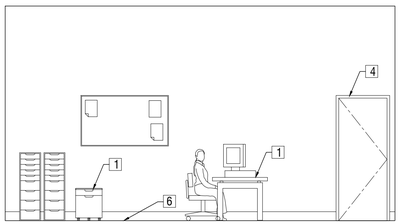

Ⓓ

49	TYPICAL OFFICE
1/4"=1' – 0"	

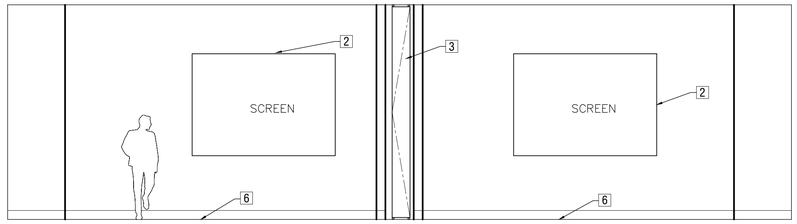

Ⓐ

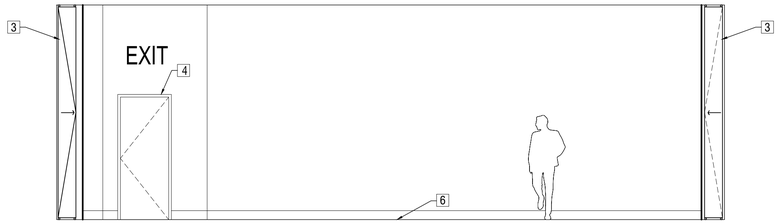

Ⓑ

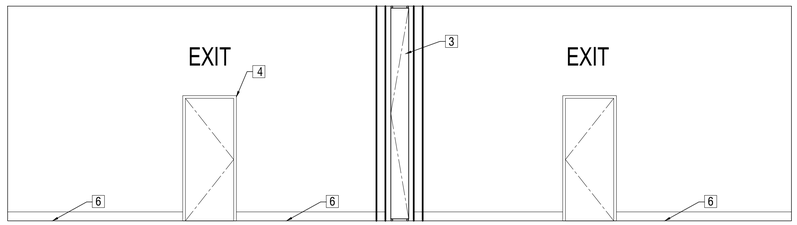

Ⓒ

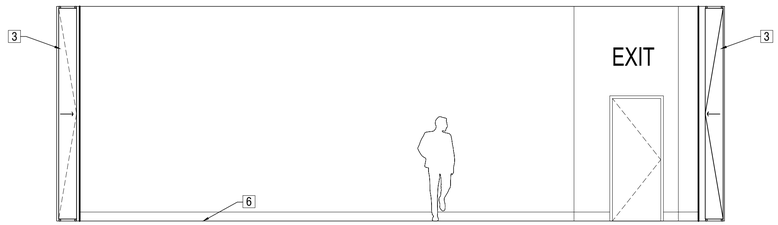

Ⓓ

50	OFFICE / LOUNGE
1/4"=1' – 0"	

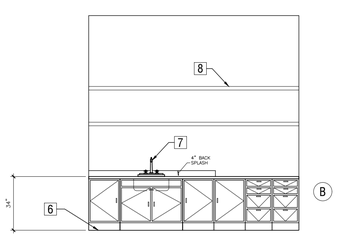

Ⓑ

THE CONTROLS FOR THE FAUCET SHALL BE OPERABLE W/ONE HAND AND SHALL NOT REQUIRE TIGHT GRASPING, PINCHING, OR TWISTING OF THE WRIST. THE FORCE REQUIRED TO ACTIVATE OPERABLE PARTS SHALL BE 5 LBS. MAX

51	LOUNGE ROOM
1/4"=1' – 0"	

4
5

KEY NOTES

1. FURNITURE
2. SCREEN
3. MOVABLE SEPARATION WALLS
4. DOOR
5. WINDOW
6. BASE
7. SINK
8. SHELF

M U N O Z and A S S O C I A T E S
A R C H I T E C T S
230 Capitol Street
Salinas, Ca. 93901
salvador.munoz@fmunozarchitects.com
www.fmunozarchitects.com
(831)320-0498

COPYRIGHT NOTICE

REGISTERED PROFESSIONAL ARCHITECT
SALVADOR F. MUNOZ
CA.18898
EXP. 11-30-2025
CALIFORNIA

JOB NUMBER
002-2018

REV	DATE	DESCRIPTION
1	06-01-21	REVISION
2	09-23-2021	REVISION
3	03-01-2022	REVISION
4	03-23-2022	REVISION
5	12-4-2024	FLOODPROOF REVISION
6		

APN
117-323-011-000

OUR LADY OF
ASSUMPTION CHURCH

100 SALINAS ROAD
(PAJARO) WATSONVILLE, CA 95076

SHEET TITLE
INTERIOR ELEVATIONS

SHEET NUMBER
A 7.3

DATE: 12-4-2024

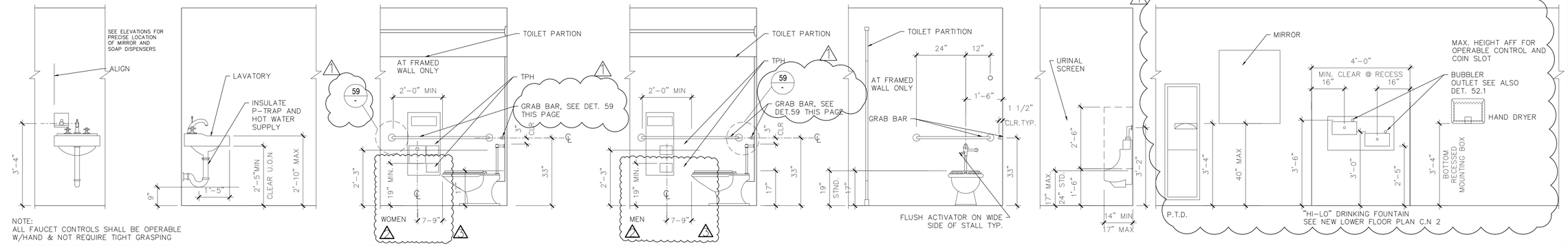

NOTE:
ALL FAUCET CONTROLS SHALL BE OPERABLE W/HAND & NOT REQUIRE TIGHT GRASPING

52 TYPICAL ACCESSIBLE MOUNTING HEIGHT FOR ADULT TLT. FIXTURES AND ACCESORIES
1/2"=1' - 0"

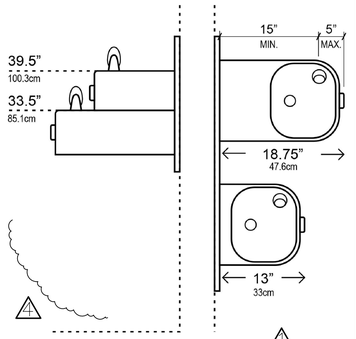

52.1 BUBBLER OUTLET DETAIL
N.T.S.

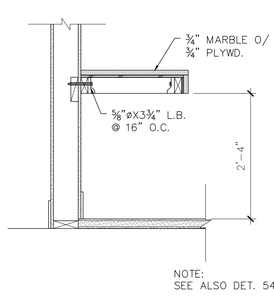

NOTE:
SEE ALSO DET. 54

53 COUNTER DETAIL
3/4"=1' - 0"

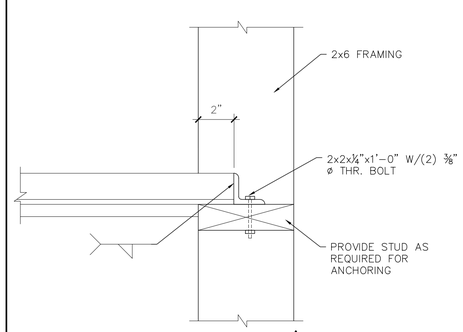

54 COUNTER @ WALL
3"=1' - 0"

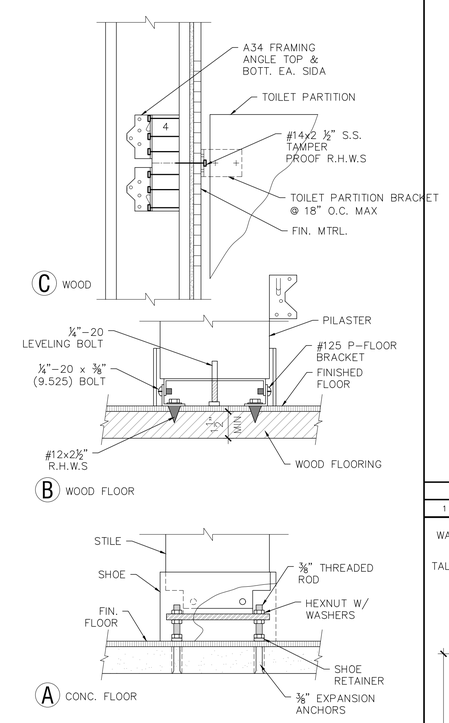

57 TYPICAL PARTITION MOUNTING
3"=1' - 0"

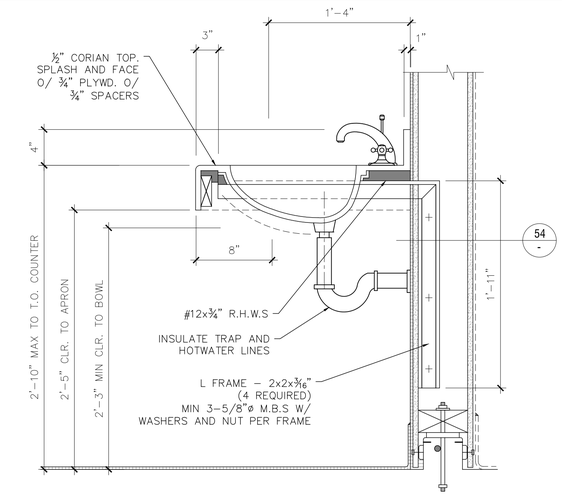

58 SECTION THRU COUNTER SINK
1 1/2"=1' - 0"

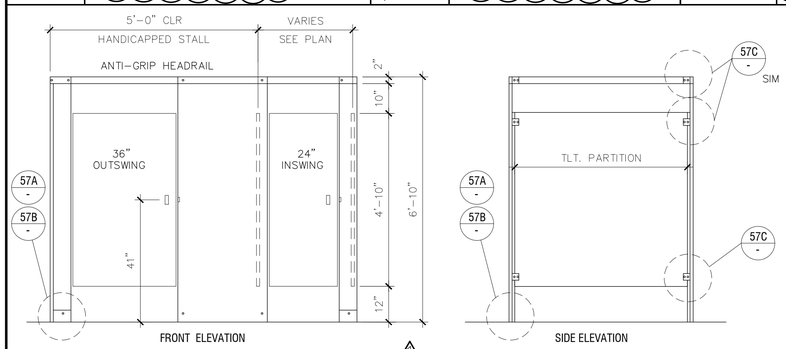

55 TYP. PARTITION MOUNTING LOCATIONS
1/2"=1' - 0"

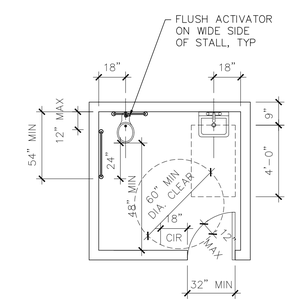

56 TYP. SINGLE OCC TOILET CLEARANCES
1/4"=1' - 0"

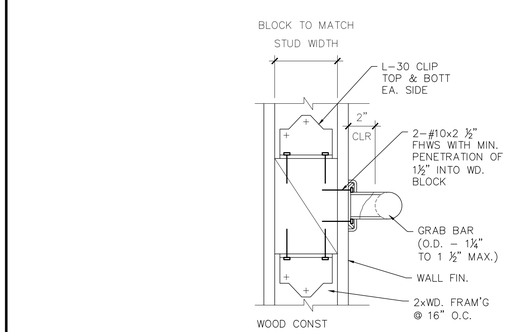

59 BACKING / MOUNTING DTL.
3"=1' - 0"

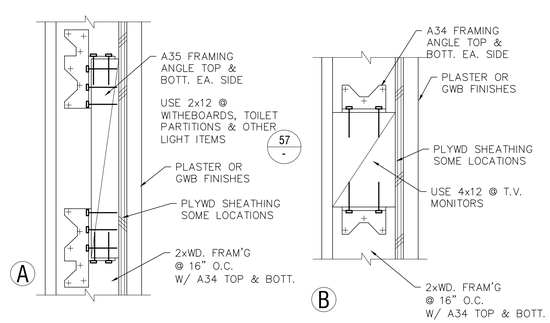

60 TYP. ACCESSORY BLOCKING
3"=1' - 0"

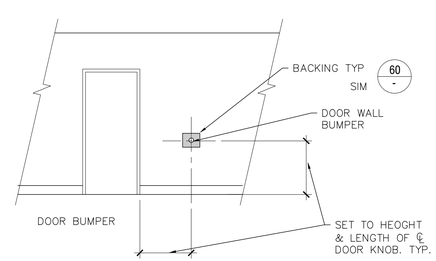

61 TYPICAL MOUNTING HEIGHTS
1/4"=1' - 0"

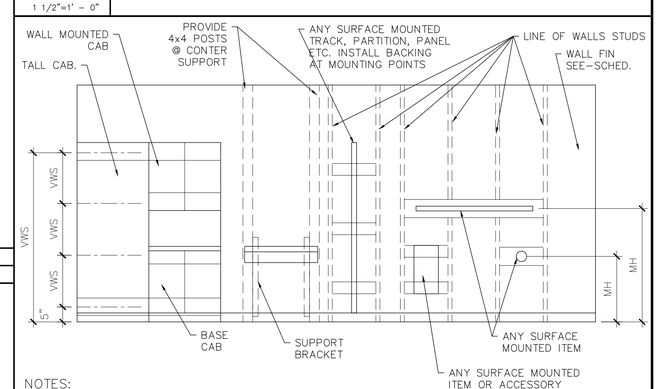

NOTES:

1.- INSTALL BACKING BEHIND ALL POINTS OF ANCHORAGE OF WALL MOUNTED ITEMS/ ACCESSORIES FOLLOWING EXAMPLES SHOWN ABOVE. SEE 60

2.- INSTALL RECESSED OR SEMI-RECESSED ITEMS/ ACCESSORIES PER 17 A-9.3

DENOTES TYP. BACKING IN WALL 60

MH MOUNTING HEIGHT VERIFY W/MANUFACTURER UNLESS OTHERWISE NOTED

VWS VERIFY W/ SUPPLIER OF ITEM OR ACCESSORY FOR LOCATION OR BACKING PC

62 TYPICAL BLOCKING LOCATIONS
1/4"=1' - 0"

MUNOZ and ASSOCIATES ARCHITECTS
230 Capitol Street
Salinas, Ca. 93901
sal@munozandassociates.com
www.smunozarchitects.com
(831)320-0498

COPYRIGHT NOTICE

REGISTERED PROFESSIONAL ARCHITECT
SALVADOR F. MUNOZ
CA.18898
EXP. 11-30-2025
STATE OF CALIFORNIA

JOB NUMBER
002-2018

REV	DATE	DESCRIPTION
1	06-01-21	REVISION
2	09-23-2021	REVISION
3	12-07-2021	REVISION
4	02-28-2022	REVISION
5	12-4-2024	FLOODPROOF REVISION

APN
117-323-011-000

OUR LADY OF ASSUMPTION CHURCH
100 SALINAS ROAD
(PAJARO) WATSONVILLE, CA 95076

SHEET TITLE
TYPICAL MOUNTING HEIGHTS & DETAILS

SHEET NUMBER
A 7.4

DATE: 12-4-2024

SIGN TYPES

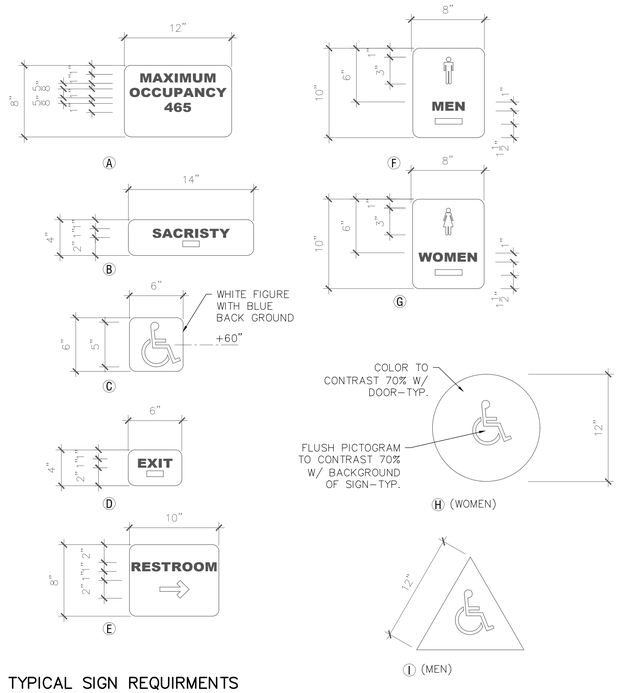

TYPICAL SIGN REQUIRMENTS

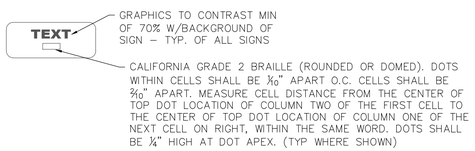

36	TYPICAL SIGNS REQUIRMENTS
1/8"=1' – 0"	

WINDOW AND FRAME SCHEDULE

WINDOW MARK	OPENING SIZE (WIDTH x HEIGHT) (VERIFY)	TYPE SEE NOTE 2	GLASS SEE NOTE 3	RATING SEE NOTE 4	FRAME SEE NOTE 5	HEAD TYP. A9.2	JAMB TYP. A9.2	MULLION TYP. A9.2	SILL TYP. A9.2	OTHER	REMARKS
1	1'–6" x 1'–6"	A	✓	–	AL	29	29	–	28		
2	1'–6" x 1'–6"	A	✓	–	AL	29	29	–	28		
3	1'–6" x 1'–6"	A	✓	–	AL	29	29	–	28		
4	6'–0" x 4'–0"	B	✓	–	AL	29	29	–	28		EXISTING (LOWER FLOOR)
5	6'–0" x 4'–0"	B	✓	–	AL	29	29	–	28		EXISTING (LOWER FLOOR)
6	1'–6" x 1'–6"	A	✓	–	AL	29	29	–	28		
7	1'–6" x 1'–6"	A	✓	–	AL	29	29	–	28		
8	1'–6" x 1'–6"	A	✓	–	AL	29	29	–	28		
9	1'–6" x 1'–6"	A	✓	–	AL	29	29	–	28		
10	1'–6" x 1'–6"	A	✓	–	AL	29	29	–	28		
11	1'–6"x 3'–2"	C	✓	–	AL	29	29	–	28		EXISTING (LOWER FLOOR)
12	6'–0" x 4'–0"	B	✓	–	AL	29	29	–	28		
13	6'–0" x 4'–0"	B	✓	–	AL	29	29	–	28		
14	6'–0" x 4'–0"	B	✓	–	AL	29	29	–	28		
15	6'–0" x 4'–0"	B	✓	–	AL	29	29	–	28		
16	6'–0" x 4'–0"	B	✓	–	AL	29	29	–	28		
17	6'–0" x 4'–0"	B	✓	–	AL	29	29	–	28		
18	1'–6" x 1'–6"	A	✓	–	AL	29	29	–	28		
19	1'–6" x 1'–6"	A	✓	–	AL	29	29	–	28		
20	1'–6" x 1'–6"	A	✓	–	AL	29	29	–	28		
21	1'–6" x 1'–6"	A	✓	–	AL	29	29	–	28		
22	1'–6"x 3'–2"	C	✓	–	AL	29	29	–	28		
23	6'–0" x 4'–0"	C	✓	–	AL	29	29	–	28		
24	6'–0" x 4'–0"	C	✓	–	AL	29	29	–	28		

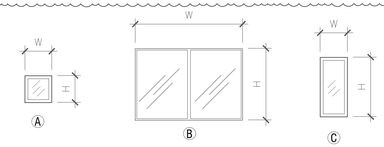

FINISH HARDWARE SCHEDULE

FINISH SHALL BE BHMA 626 (US 26D) U.O.N.
BUTTS PRIMED COATED 600.
EXIT DEVICES 99 SERIES X S.B.(SEX BOLTS).
CLOSERS ALUM X S.B.

GROUP 1: FRONT EXTERIOR DOOR

– CHANGE D50PD OLY LOCKSET TO EXIT DEVICE.
VERIFY OTHER HARDWARE FOR COMPLIANCE WITH THIS LIST.

1-1/2 PR	HINGES FBB179 4-1/2 X 4-1/2 X 600 NRP	(ST)
1	LOCKSET D80PD OLY	(SC)
1	CLOSER 604PA X SB	(DO)
1	DOOR STOP F121X (OMIT @ DR. 3)	(BU)
1	GASKETING S88D	(PE)

GROUP 2: INTERIOR DOORS
HARDWARE TO SUIT

1-1/2 PR	HINGES FBBK179 4-1/2 X 4-1/2 X 600 X NRP	(ST)
1	EXIT DEVICE 99L-F	(VO)
1	CYLINDER 20-022	(SC)
1	CLOSER 605 PA	(DO)
1	DOOR STOP WC12X	(BU)
1	THRESHOLD	(PE)
1	GASKETING 588D	(PE)

GROUP 3: OFFICE AND DOORS

X	HINGES BY PREHUNG DOOR SUPLIER	(--)
1	LOCKSET A53PD LEV	(SC)
1	DOOR STOP F8063X	(BU)

GROUP 4: JANITOR/STORAGE

1	HINGES BY PREHUNG DOOR SUPLIER	(--)
1	LOCKSET A80 PD LEV.	(SC)
1	DOOR STOP WC12X	(BU)

MANUFACTURERS SYMBOLS

(ST)	STANLEY
(DO)	DORMA
(PE)	PEMKO
(VO)	VON DUPRIN
(SC)	SCHLAGE
(BU)	BUILDERS BRASS
(GL)	GLYNN-JOHNSON

WINDOW NOTES

1. "✓" SHOWN ON SCHEDULE INDICATES TYPICAL
2. WINDOW TYPES – (SEE ELEVATIONS)
3. T = TEMPERED
   TNT = TINTED
   W = WIRE
   TYPICAL = CL = 1/4" CLEAR
   CLT = 1/4" CLEAR TEMPERED
   O = OBSCURED
4. INDICATES HOURS OF FIRE RATING
   NR = NOT RATED 20M=20 MINUTES
5. TYPICAL FRAMES SHOWN "✓" INDICATES DETAIL
   S = STEEL
   AL = ALUMINIUM
6. CONTRACTOR SHALL SUBMIT ENGINEERING DRAWINGS AND DESIGN CALCS. FOR THE WINDOW MULLIONS AND CONNECTION DETAILS TO THE ARCHITECT FOR APPROVAL

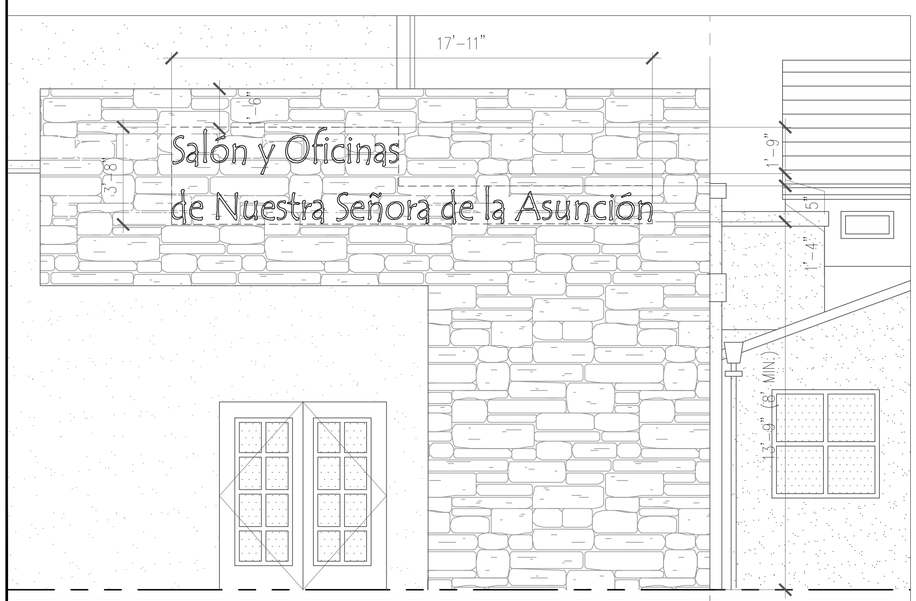

37	SIGN MOUNTING DETAILS
3/8"=1' – 0"	

FIXTURES CALCULATIONS

TYPE OF FIXTURE	FIXTURES REQ. PER OCC. FACTOR	FIXTURES PROVIDED	COMPILANT
WC–MEN	3	5	●
WC–WOMEN	6	9	●
URINAL	3	4	●
LAV. M/W	2M / 4W	5M / 5W	●
DRINK.F.	1	2	●

SIGN NOTES

1. SIGN PER CHAPTER 21.60 / 21.60.065–E & G–4
2. SIGN AREA: 43.982 SF.

MUNOZ and ASSOCIATES ARCHITECTS
230 Capitol Street
Salinas, Ca. 93901
salvador@munozandassociatesarchitects.com
www.armunozarchitects.com
(831)320-0488

COPYRIGHT NOTICE

REGISTERED PROFESSIONAL ARCHITECT
SALVADOR F. MUÑOZ
CA.18898
EXP. 11-30-2025
CIVIL STATE OF CALIFORNIA

JOB NUMBER
002-2018

REV	DATE	DESCRIPTION
1	06-01-21	REVISION
2	09-23-2021	REVISION
3	12-07-2021	REVISION
4	10-13-2022	REVISION
5	12-4-2024	FLOODPROOF REVISION

APN
117-323-011-000

OUR LADY OF ASSUMPTION CHURCH
100 SALINAS ROAD
(PAJARO) WATSONVILLE, CA 95076

SHEET TITLE
SIGNS & SCHEDULES

SHEET NUMBER
A 8.1

DATE: 12-4-2024

NOTES

1. THE DOOR SHALL SWING TO THE FULLY OPEN POSITION WITH AN OPENING FORCE NOT TO EXCEED 5 POUNDS FOR INTERIOR DOORS AND 8.5 POUNDS FOR EXTERIOR DOORS. (CBC SECTION 1133B.2.5)
2. DOORS SHALL BE PROVIDED WITH FLOOR OR LANDING ON EACH SIDE OF THE DOOR:
   A. SURFACE SLOPE OF LEVEL AREA SHALL NOT EXCEED 2% (CBC SECTION 1133B.2.4)
   B. FLOOR OR LANDNG SHALL NOT BE MORE THAN ½ INCH LOWER THEN THE THRESHOLD. (CBC SECTION 1003.3..1.6)
   C. LANDING DEPTHS: 60" AT PULL SIDE, 60" WIDE, WITH 18" INTERIOR 24" EXTERIOR STRIKE SIDE CLEARANCE: 44" OR 48" AT PUSH SIDE, WITH 12" STRIKE SIDE CLEARANCE WHERE A CLOSER AND LATCH IS USED.
3. THE BOTTOM OF ALL DOORS (AND THE PUSH SIDE OF ACCESSIBLE GATES) SHALL HAVE 10 INCHES OF A SMOOTH, UNINTERRUPTED SURFACE THAT ALLOWS DOOR TO BE OPENED BY WHEEL CHAIR FOOTREST WITHOUT CREATING A TRAP OR HAZARDOUS CONDITION.
4. ALL DOOR HARDWARE SHALL BE OPERABLE WITHOUT REQUIRING THE ABILITY TO GRASP THE OPENING HARDWARE, & ARE LEVER HARDWARE UNLESS OTHERWISE NOTED.
5. THE MEN & WOMENS TOILET ARE PUSH / PULL HARDWARE.

DOOR NOTES

1. "✓" SHOWN ON SCHEDULE INDICATES TYPICAL
2. DOOR TYPES
3. " ✓ " ALL DOORS 1–3/4" UNLESS OTHERWISE NOTES
   S.C. = SOLID CORE WOOD
   H.C. = HOLLOW CORE
   H.M. = HOLLOW METAL
   AL = ALUMINUM
   WD. =WOOD
   MTL = METAL
   GHM = GALV. HOLLOW MET
   S/R = STYLE AND RAIL
6. FRAME TYPES
   H.M. = HOLLOW METAL
   W.D. WOOD
   (SEE DOOR CONTRUCTION ABOVE)
7. FACING AND FINISH
   AL. = ALUMINUM
   F = FACTORY
   F.F. = FACTORY FINISH
   P = PAINTED
   WD = OAK STAIN
8. ASSEMBY FIRE RATING
   20M = 20 MINUTE RATED
   45M = 45 MINUTE RATED
   90M = 90 MINUTE RATED

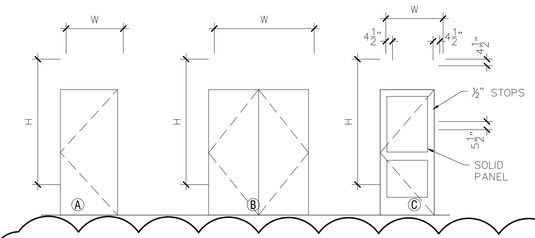

6) WHEN FIRE DOORS ARE REQUIRED, THE MAXIMUM EFFORT TO OPERATE THE DOOR MAY BE INCREASED TO THE MINIMUM ALLOWABLE BY THE APPROPRIATE ADMINISTRATIVE AUTHORITY, NOT TO EXCEED 15 LB. THE MAIN EXIT DOOR IN OCCUPANCIES GROUP A, GROUPS B, F, M AND S, ARE PERMITTED TO BE EQUIPPED WITH A KEY-OPERATED LOCKING DEVISES FROM THE EGRESS SIDE IF PROPER SIGNAGE IS PROVIDED OVER THE MAIN EXIT DOOR STATING, "THIS DOOR TO REMAIN UNLOCKED WHEN BUILDING IS OCCUPIED". THE SIGN SHALL BE IN LETTERS 1" INCH HIGH ON A CONTRASTING BACKGROUND.

7) PROVIDE CLEAR SPACE OF 12" PAST STRIKE EDGE OF THE DOOR ON THE OPPOSITE SIDE TO WHICH THE DOOR SWINGS IF THE DOOR IS EQUIPPED WITH BOTH A LATCH AND A CLOSER. THE FLOOR OR LANDING SHALL BE NOT MORE THAN 1/2" LOWER THAN THE THRESHOLD OF THE DOORWAY. NOTE ON THE PLANS EXISTING DOOR THRESHOLD HEIGHTS. WHEN THE DOOR HAS A CLOSER, THEN THE SWEEP PERIOD OF THE CLOSER SHALL BE ADJUSTED SO THAT FROM AN OPEN POSITION OF 70 DEGREES, THE DOOR WILL TAKE AT LEAST 3 SECONDS TO MOVE TO A POINT 3" FROM THE LATCH, MEASURED TO THE LANDING EDGE OF THE DOOR.

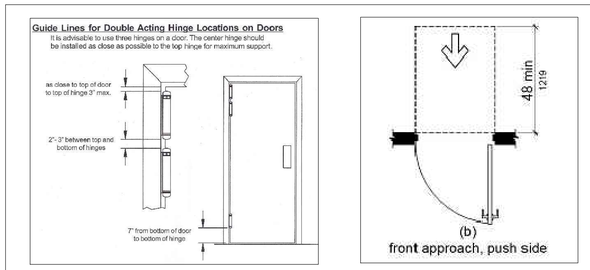

36 DOUBLE ACTION DOOR
1/2"=1' – 0"

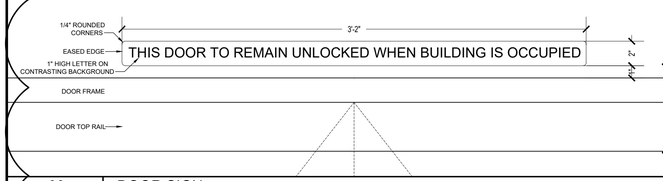

33 DOOR SIGN
N.T.S

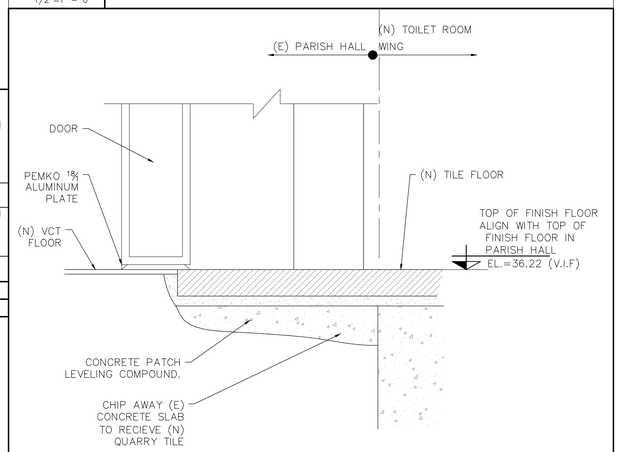

32 DOOR SADDLE
1/2"=1' – 0"

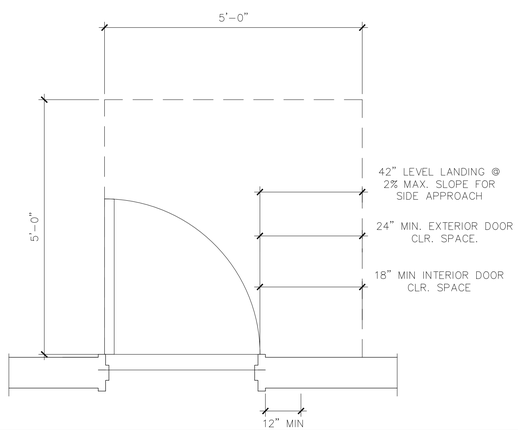

35 TYPICAL DOOR LANDING
1/2"=1' – 0"

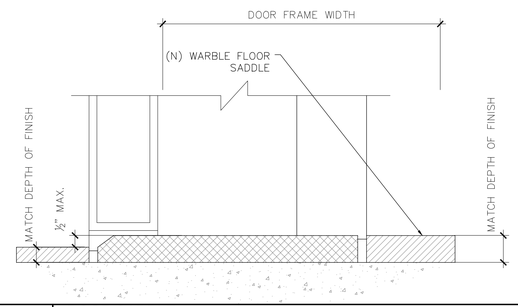

31 DOOR SADDLE
1/2"=1' – 0"

DOOR AND FRAME SCHEDULE

DOOR MARK	OPENING SIZE (WIDTH x HEIGHT) (VERIFY)	TYPE SEE NOTE 2	THICKNESS SEE NOTE 3	CONSTRUCTION SEE NOTE 4	GLASS SEE NOTE 5	FRAME TYPE SEE NOTE 6	FACING & FINISH SEE NOTE 7	RAITING (MINUTES) SEE NOTE 8	DETAILS SEE SHT. A9.1 (U.O.N.) HEAD	JAMB	THRESHOLD	OTHER	REMARKS
1	3'–0" x 7'–0"	A	✓	H.M.	–	H.M.	P		30	28	31/A8.2		PANIC HARDWARE
2	3'–0" x 7'–0"	A	✓	H.M.	–	H.M.	P		30	28	31/A8.2		EXISTING (LOWER FLOOR)
3	3'–0" x 7'–0"	A	✓	H.M.	–	H.M.	P		30	28	31/A8.2		
4	6'–0" x 7'–0"	B	✓	H.M.	–	H.M.	P	90M	20	18	17		EXISTING (LOWER FLOOR), PANIC HARDWARE
5	3'–0" x 7'–0"	A	✓	H.M.	–	H.M.	P		30	28	31/A8.2		EXISTING (LOWER FLOOR)
6	6'–0" x 7'–0"	B	✓	H.M.	–	H.M.	P	90M	20	18	17		EXISTING (LOWER FLOOR), PANIC HARDWARE
7	6'–0" x 7'–0"	B	✓	H.M.	–	H.M.	P	90M	20	18	17		EXISTING (LOWER FLOOR), PANIC HARDWARE
8	3'–0" x 7'–0"	A	✓	H.M.	–	H.M.	P		30	28	31/A8.2		
9	3'–0" x 7'–0"	A	✓	H.M.	–	H.M.	P		30	28	31/A8.2		
10	3'–0" x 7'–0"	A	✓	H.M.	–	H.M.	P		30	28	31/A8.2		
11	3'–0" x 7'–0"	A	✓	H.M.	–	H.M.	P		30	28	31/A8.2		
12	3'–0" x 7'–0"	A	✓	H.M.	–	H.M.	P		30	28	31/A8.2		
13	3'–0" x 7'–0"	A	✓	H.M.	–	H.M.	P		30	28	31/A8.2		PANIC HARDWARE
14	3'–0" x 7'–0"	A	✓	H.M.	–	H.M.	P		30	28	31/A8.2		
15	3'–0" x 7'–0"	A	✓	H.M.	–	H.M.	P		30	28	31/A8.2		
16	3'–0" x 7'–0"	A	✓	H.M.	–	H.M.	P		30	28	31/A8.2		PANIC HARDWARE
17	3'–0" x 7'–0"	A	✓	H.M.	–	H.M.	P		30	28	31/A8.2		
18	3'–0" x 7'–0"	A	✓	H.M.	–	H.M.	P		30	28	31/A8.2		
19	3'–0" x 7'–0"	A	✓	H.M.	–	H.M.	P		30	28	36/A8.2		E. (LWR. FLR.)–DOUBLE HUNG–NO CLOSER
20	3'–0" x 7'–0"	A	✓	H.M.	–	H.M.	P		30	28	31/A8.2		EXISTING (LOWER FLOOR)
21	3'–0" x 7'–0"	A	✓	H.M.	–	H.M.	P		30	28	31/A8.2		EXISTING (LOWER FLOOR)
22	3'–0" x 7'–0"	A	✓	H.M.	–	H.M.	P		30	28	31/A8.2		EXISTING (LOWER FLOOR)
23	3'–0" x 7'–0"	A	✓	H.M.	–	H.M.	P		30	28	31/A8.2		
24	3'–0" x 7'–0"	A	✓	H.M.	–	H.M.	P		30	28	31/A8.2		
25	3'–0" x 7'–0"	C	✓	S/R	T	H.M.	P						
26	3'–0" x 7'–0"	C	✓	S/R	T	H.M.	P						
27	3'–0" x 7'–0"	A	✓	H.M.	–	H.M.	P		30	28	31/A8.2		
28	3'–0" x 7'–0"	A	✓	H.M.	–	H.M.	P		30	28	31/A8.2		
29	3'–0" x 7'–0"	A	✓	H.M.	–	H.M.	P		30	28	31/A8.2		
30	3'–0" x 7'–0"	C	✓	S/R	T	H.M.	P						
31	3'–0" x 7'–0"	C	✓	S/R	T	H.M.	P						
32	3'–0" x 7'–0"	C	✓	S/R	T	H.M.	P						
33	3'–0" x 7'–0"	C	✓	S/R	T	H.M.	P						
34	3'–0" x 7'–0"	C	✓	S/R	T	H.M.	P						
35	3'–0" x 7'–0"	A	✓	H.M.	–	H.M.	P		30	28	31/A8.2		PANIC HARDWARE
36	3'–0" x 7'–0"	C	✓	S/R	T	H.M.	P						PANIC HARDWARE
37	3'–0" x 7'–0"	C	✓	S/R	T	H.M.	P						PANIC HARDWARE
38	3'–0" x 7'–0"	C	✓	S/R	T	H.M.	P						PANIC HARDWARE
39	3'–0" x 7'–0"	C	✓	S/R	T	H.M.	P						PANIC HARDWARE
40	3'–0" x 7'–0"	A	✓	H.M.	–	H.M.	P		30	28	31/A8.2		PANIC HARDWARE
41	3'–0" x 7'–0"	C	✓	S/R	T	H.M.	P						
42	3'–0" x 7'–0"	A	✓	H.M.	–	H.M.	P		30	28	31/A8.2		
43	3'–0" x 7'–0"	A	✓	H.M.	–	H.M.	P		30	28	31/A8.2		

MUÑOZ and ASSOCIATES ARCHITECTS
230 Capitol Street
Salinas, Ca. 93901
salvador@munozandassociatesarchitects.com
www.amunozarchitects.com
(831)920-0488

COPYRIGHT NOTICE

REGISTERED PROFESSIONAL ARCHITECT
SALVADOR F. MUÑOZ
CA.18898
EXP. 11–30–2025
CALIFORNIA

JOB NUMBER
002-2018

REV	DATE	DESCRIPTION
1	06-01-21	REVISION
2	09-23-2021	REVISION
3	01-12-2022	REVISION
4	12-4-2024	FLOODPROOF REVISION

APN
117-323-011-000

OUR LADY OF ASSUMPTION CHURCH
100 SALINAS ROAD
(PAJARO) WATSONVILLE, CA 95076

SHEET TITLE
DOOR SCHEDULE & DETAILS

SHEET NUMBER
A 8.2

DATE: 12-4-2024

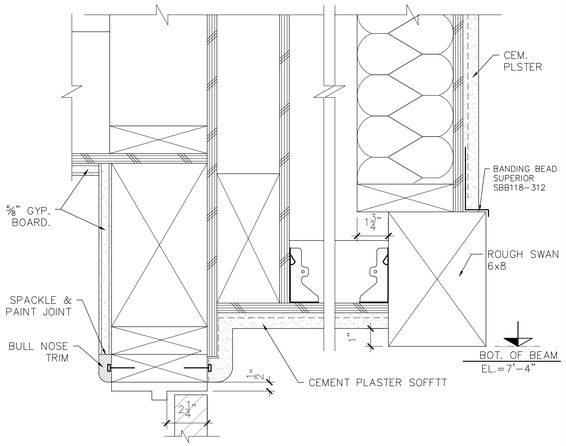

40	HEAD DETAIL MAIN ENTRANCE
3"=1' - 0"	

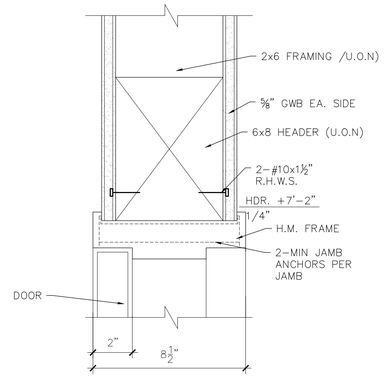

30	INTERIOR HEAD DETAIL
3"=1' - 0"	

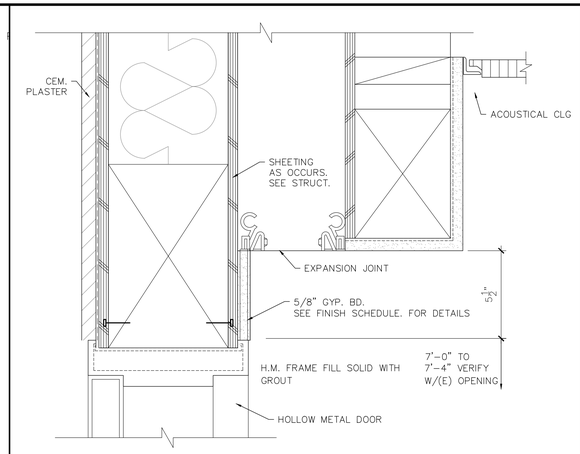

20	DOOR HEAD @ EXP. JT.
N. T. S.	

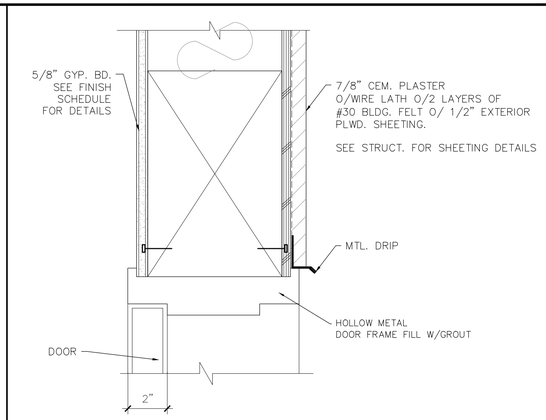

10	EXTERIOR HEAD DETAIL / JAMB SIM.
3"=1' - 0"	

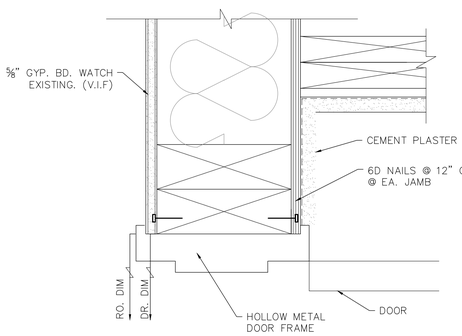

38	EXTERIOR JAMB DETAIL
3"=1' - 0"	

NOTE:
1. VERIFY WOOD FRAMING AND CONCRETE CURB CONDITIONS.

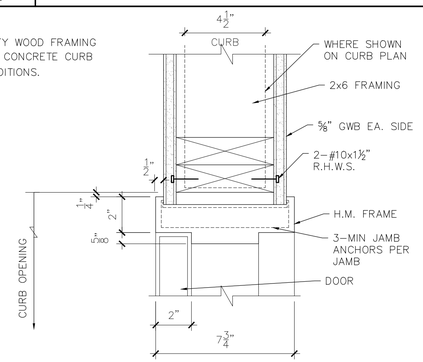

28	INTERIOR JAMB DETAIL
3"=1' - 0"	

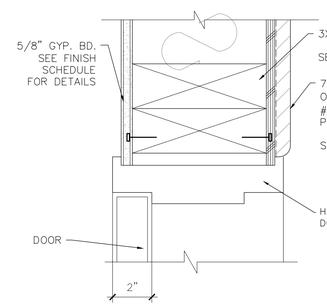

NOTE:
PROVIDE BLOCKOUT @ HEAD TOALLOW GROUTING FRAME SOLID

18	EXT. DOOR JAMB
3"=1' - 0"	

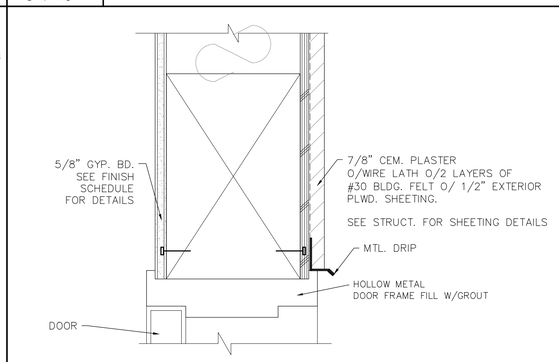

8	EXTERIOR HEAD DETAIL
3"=1' - 0"	

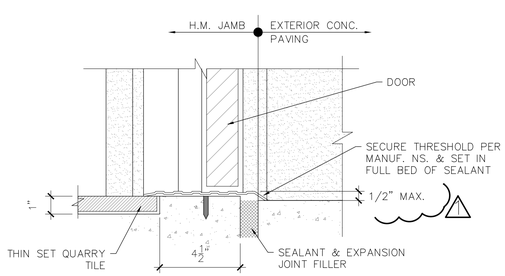

37	THRESHOLD
3"=1' - 0"	

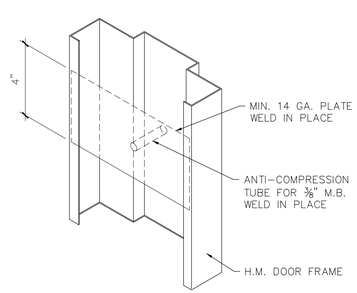

36	HOLLOW METAL FRAME ANCHOR
3"=1' - 0"	

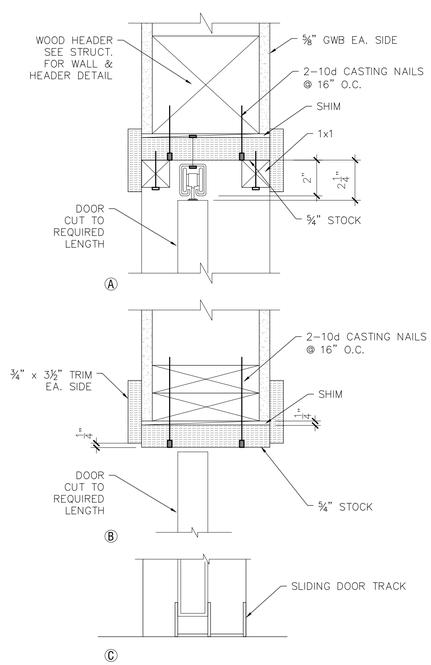

26	SLIDING DOOR
3"=1' - 0"	

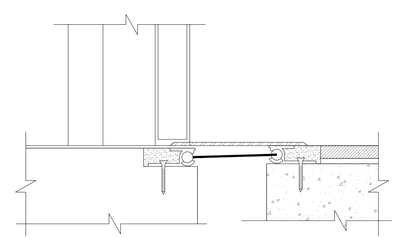

36	EXPANSION JOINT DETAIL
3"=1' - 0"	

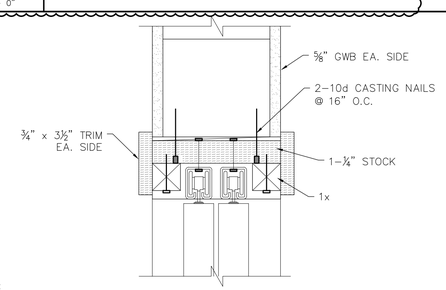

NOTE:
ALL INTERIOR WOOD TRIM TO BE OAK.

16	CLOSET DOOR HEAD
3"=1' - 0"	

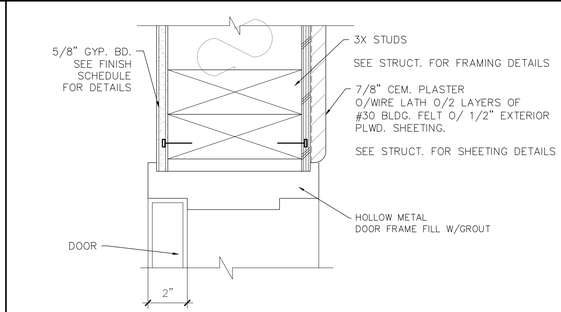

7	EXTERIOR DOOR JAMB
3"=1' - 0"	

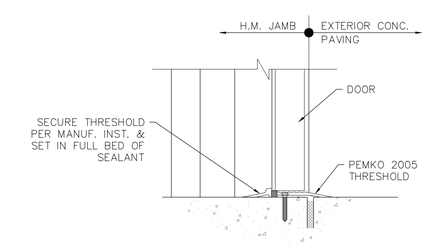

6	EXTERIOR DOOR THRESHOLD
3"=1' - 0"	

MUNOZ and ASSOCIATES ARCHITECTS
230 Capitol Street
Salinas, Ca. 93901
salvador@munozandassociates.com
www.amunozarchitects.com
(831)320-0489

COPYRIGHT NOTICE

REGISTERED PROFESSIONAL ARCHITECT
SALVADOR F. MUNOZ
CA.18898
EXP. 11-30-2025
CALIFORNIA

JOB NUMBER
002-2018

REV	DATE	DESCRIPTION
1	06-01-21	REVISION
2	09-23-2021	REVISION
3	12-4-2024	FLOODPROOF REVISION

APN
117-323-011-000

OUR LADY OF ASSUMPTION CHURCH
100 SALINAS ROAD
(PAJARO) WATSONVILLE, CA 95076

SHEET TITLE
DOOR DETAILS

SHEET NUMBER
A 9.1

DATE: 12-4-2024

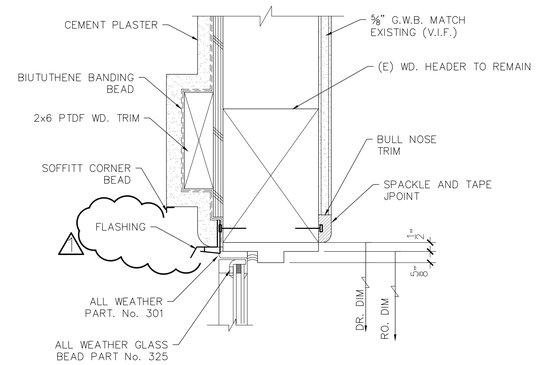

40 WINDOW HEAD DETAIL
3"=1' – 0"

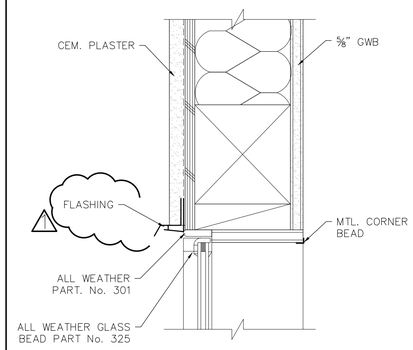

29 WINDOW HEAD (JAMB SIM)
3"=1' – 0"

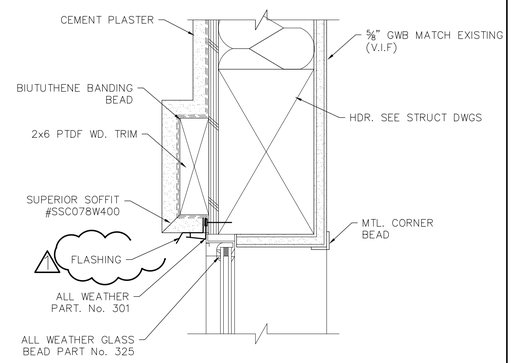

19 WINDOW HEAD
3"=1' – 0"

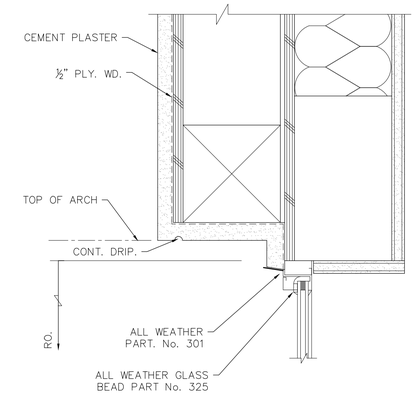

9 HEAD @ ARCHED WINDOW
3"=1' – 0"

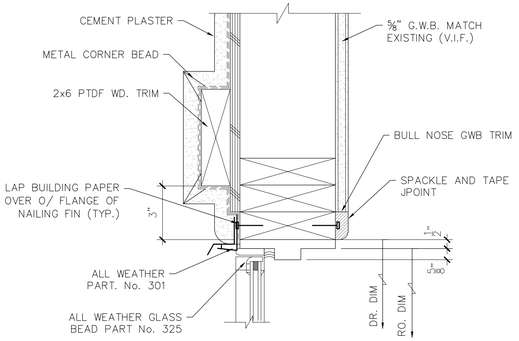

38 WINDOW JAMB DETAIL
3"=1' – 0"

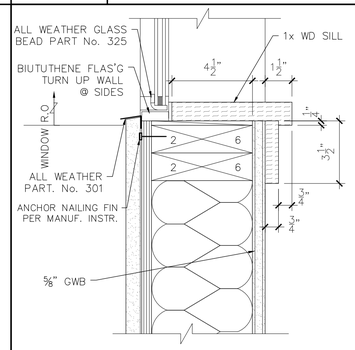

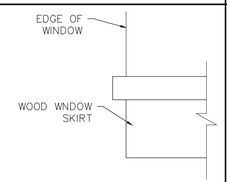

PARTIAL WINDOW ELEVATION

NOTE:
ALL INTERIOR WOOD TRIM TO BE OAK.

28 WINDOW SILL
3"=1' – 0"

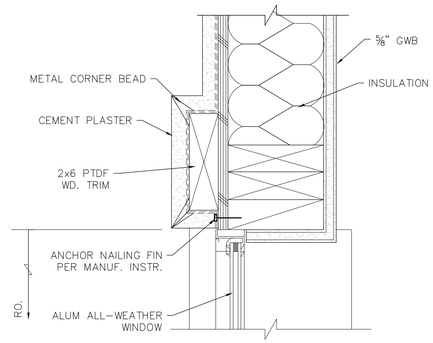

18 WINDOW JAMB
3"=1' – 0"

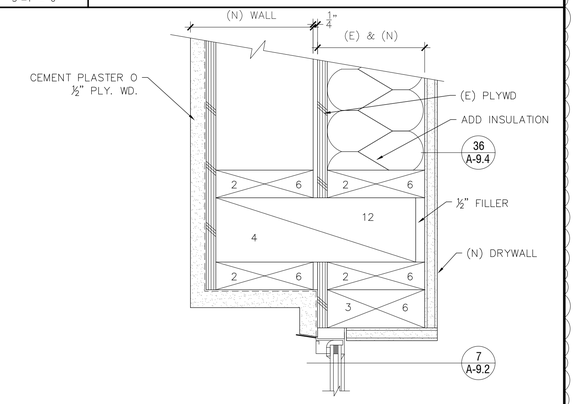

8 JAMB @ ARCHED WINDOW
3"=1' – 0"

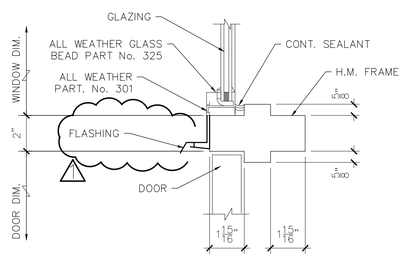

38 TRANSOM DETAIL
3"=1' – 0"

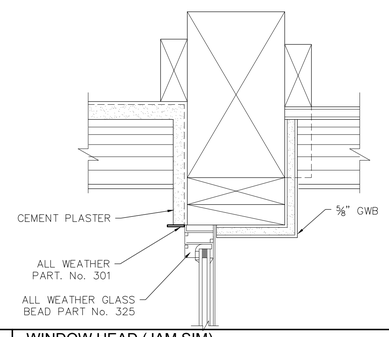

27 WINDOW HEAD (JAM SIM)
3"=1' – 0"

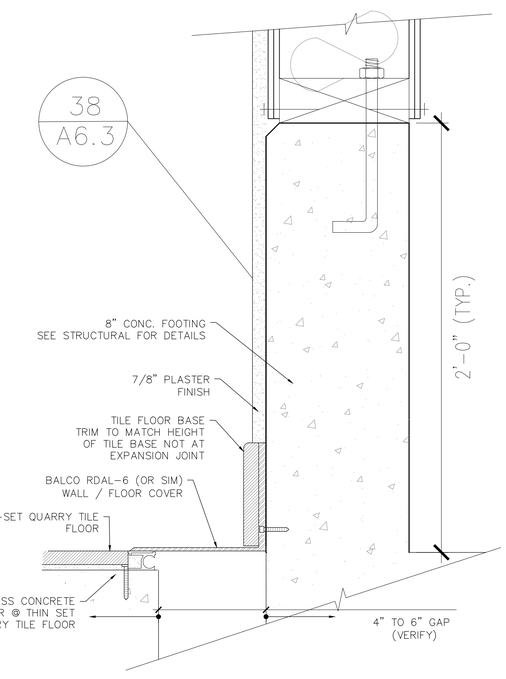

16 FLOOR EXP. J.T. @ WALL
3"=1' – 0"

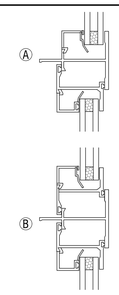

7 OPERABLE WINDOW MULLIONS
6"=1' – 0"

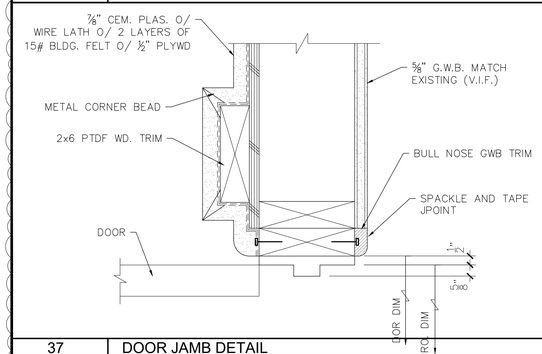

37 DOOR JAMB DETAIL
3"=1' – 0"

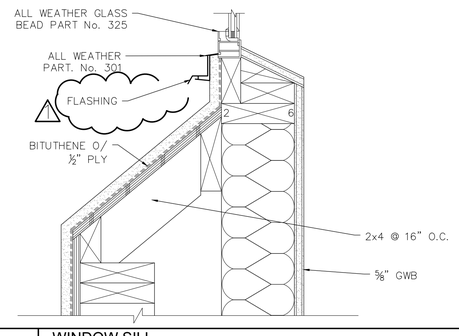

26 WINDOW SILL
3"=1' – 0"

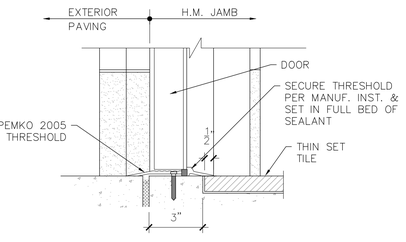

SEE ALSO DETAIL A9.2/16

36 THRESHOLD DETAIL
3"=1' – 0"

MUNOZ and ASSOCIATES ARCHITECTS
230 Capitol Street
Salinas, Ca. 93901
e-mail: salvador@munozarchitects.com
www.cmunozarchitects.com
(831)920-0488

COPYRIGHT NOTICE

REGISTERED PROFESSIONAL ARCHITECT
SALVADOR F. MUNOZ
CA.18898
EXP. 11-30-2025
CALIFORNIA, U.S.A.

JOB NUMBER
002-2018

REV	DATE	DESCRIPTION
1	06-01-21	REVISION
2	09-23-2021	REVISION
3	12-4-2024	FLOODPROOF REVISION

APN
117-323-011-000

OUR LADY OF ASSUMPTION CHURCH
100 SALINAS ROAD
(PAJARO) WATSONVILLE, CA 95076

SHEET TITLE
WINDOW DETAILS

SHEET NUMBER
A 9.2

3
DATE: 12-4-2024

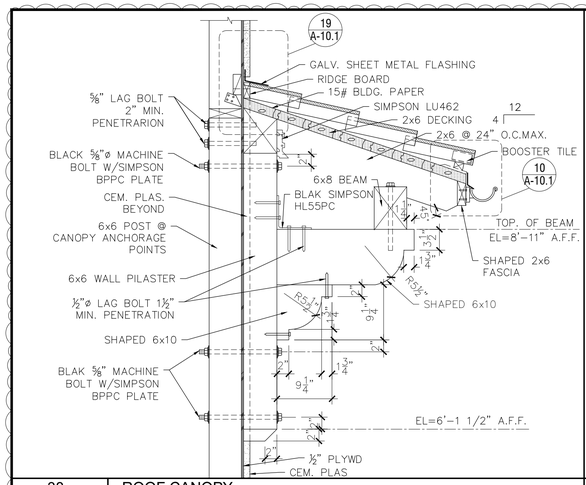

38 ROOF CANOPY
1"=1' - 0"

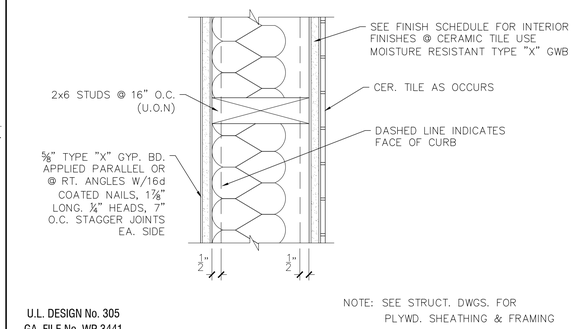

29 INTERIOR WALL
3"=1' - 0"

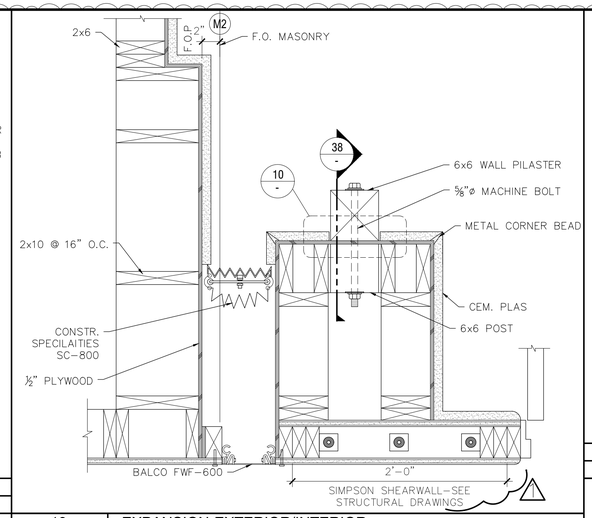

19 EXPANSION-EXTERIOR/INTERIOR
1 1/2"=1' - 0"

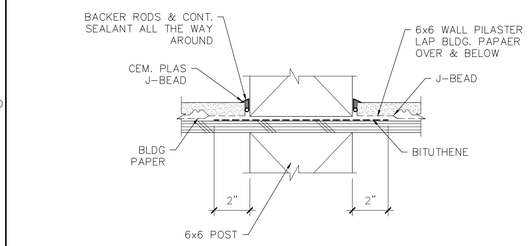

10 CANOPY WALL PILASTER
3"=1' - 0"

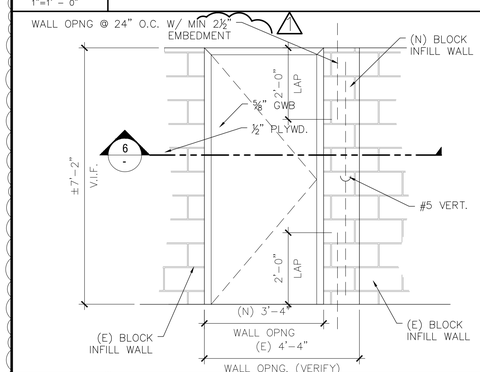

37 ELEVATION @ BLOCK WALL INFILL
1/2"=1' - 0"

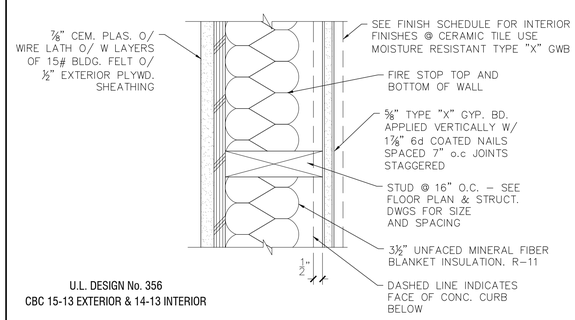

28 EXTERIOR BEARING WALL - 1 HR.
3"=1' - 0"

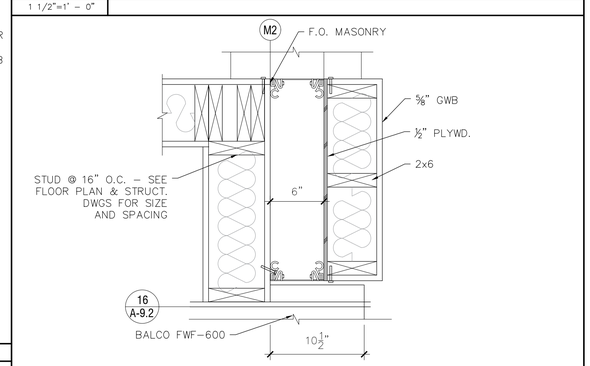

18 EXPANSION - INTERIOR
1 1/2"=1' - 0"

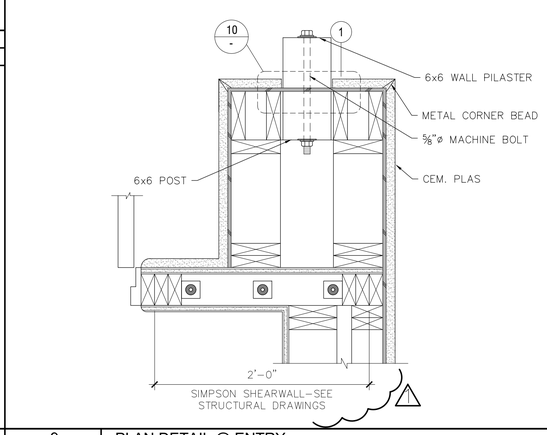

9 PLAN DETAIL @ ENTRY
1 1/2"=1' - 0"

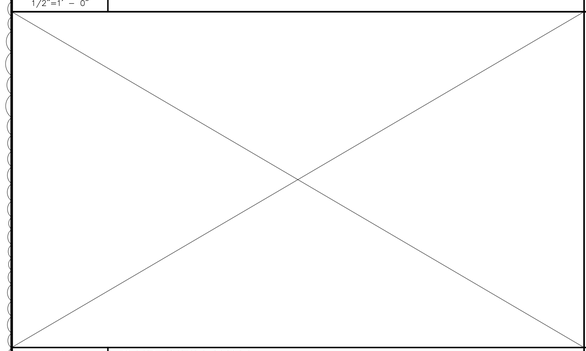

36 2-HR. INFILL WALL
1 1/2"=1' - 0"

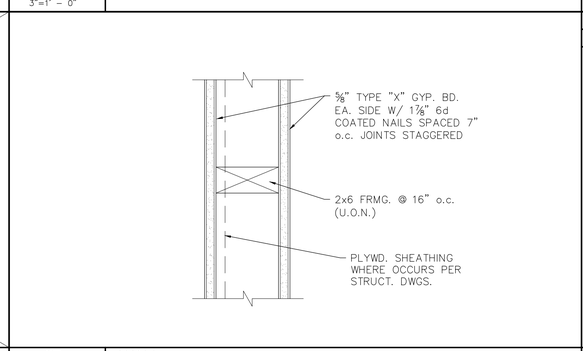

27 WALL
3"=1' - 0"

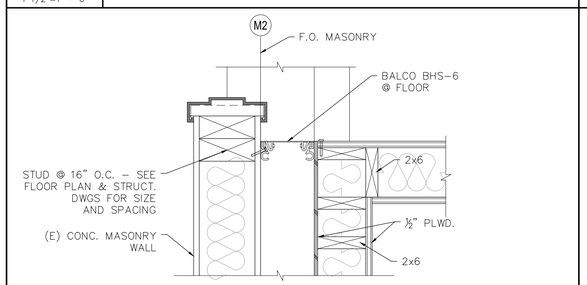

17 EXPANSION - INTERIOR
1 1/2"=1' - 0"

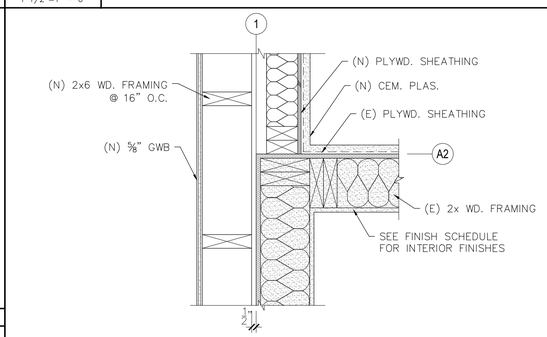

8 EXPANSION - INTERIOR
1 1/2"=1' - 0"

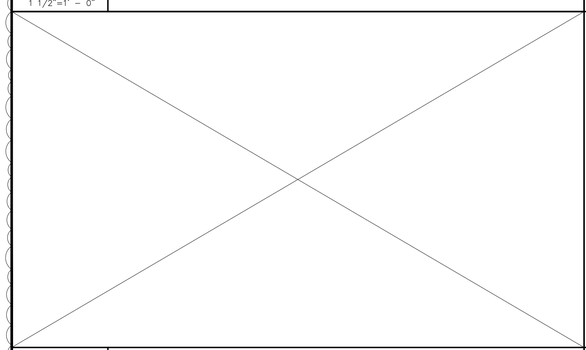

26 2-HR. INFILL WALL @ (E) WINDOW OPENING
1 1/2"=1' - 0"

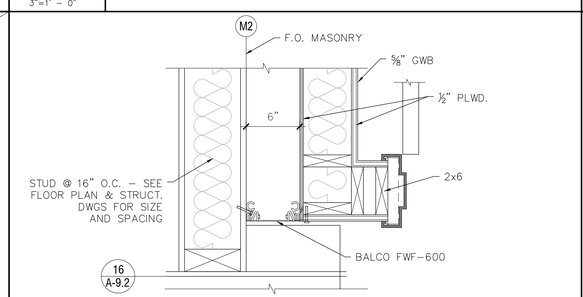

16 EXPANSION - INTERIOR
1 1/2"=1' - 0"

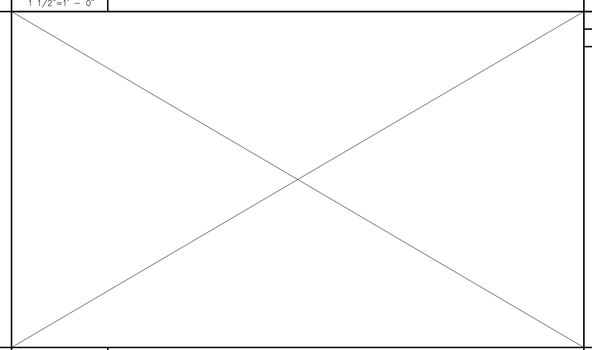

6 SECTION @ BLOCK WALL INFILL
1 1/2"=1' - 0"

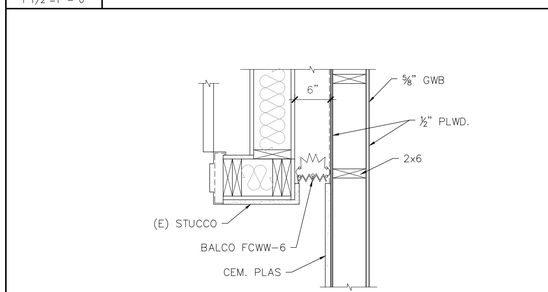

7 EXPANSION - EXTERIOR / INTERIOR
1"=1' - 0"

MUNOZ and ASSOCIATES ARCHITECTS
230 Capitol Street
Salinas, Ca. 93901
salvador@munozandassociatesarchitects.com
www.smunozarchitects.com
(831)320-0488

COPYRIGHT NOTICE

REGISTERED PROFESSIONAL ARCHITECT
SALVADOR F. MUNOZ
CA.18898
EXP. 11-30-2025
CALIFORNIA

JOB NUMBER
002-2018

REV	DATE	DESCRIPTION
1	06-01-21	REVISION
2	09-23-2021	REVISION
3	12-4-2024	FLOODPROOF REVISION

APN
117-323-011-000

OUR LADY OF ASSUMPTION CHURCH
100 SALINAS ROAD
(PAJARO) WATSONVILLE, CA 95076

SHEET TITLE
WALL CONDITIONS

SHEET NUMBER
A 9.3

DATE: 12-4-2024

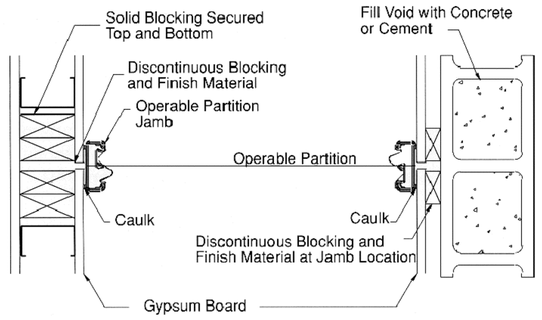

12	FOLDING WALL PARTITION DETAIL
N.T.S	

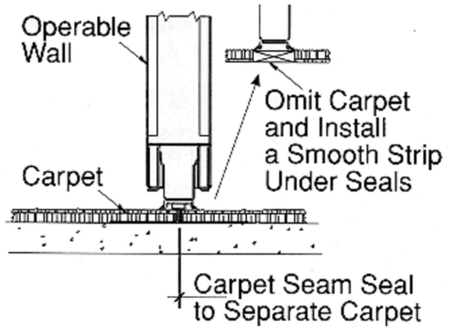

13	FOLDING WALL PARTITION DETAIL
N.T.S	

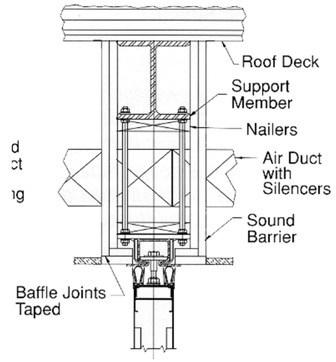

10	FOLDING WALL PARTITION DETAIL
N.T.S	

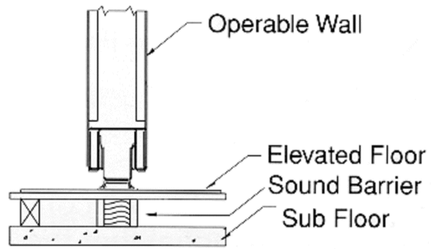

11	FOLDING WALL PARTITION DETAIL
N.T.S	

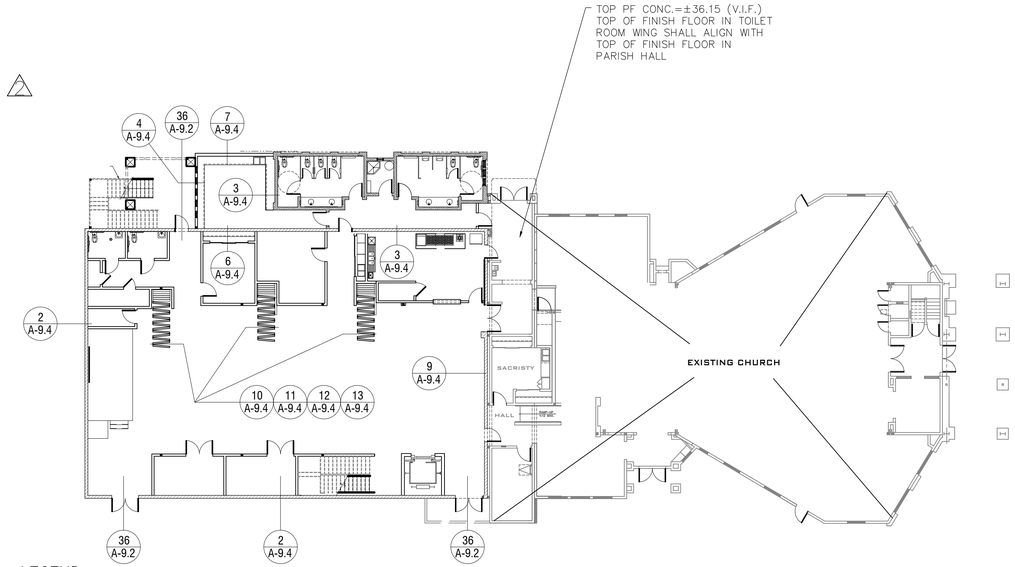

ELEVATION NOTES

1. ELEVATIONS SHOWN ON THIS SHEET ARE TO (E) FINISH FLOOR MATERIAL (U.O.N.)
2. CONTRACTOR TO VERIFY GRADES BEFORE PROCEEDING
3. CONC. SLAB ELEV IN WEST HALL & TOILET RM WING. TO ALLIGN WITH (E) PARISH HALL FINISHED FLOOR

1	CURB PLAN
1 1/16"=1' – 0"	

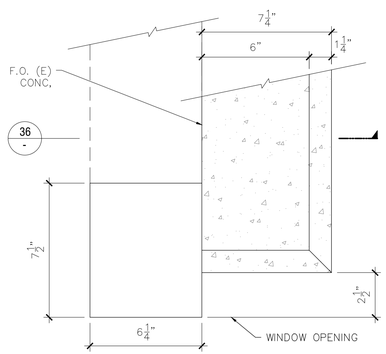

8	PLAN OF CURB @ (N) ARCHED WINDOW
3"=1' – 0"	

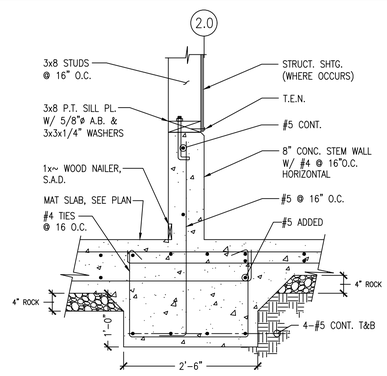

6	CURB DETAIL
3/4"=1' – 0"	

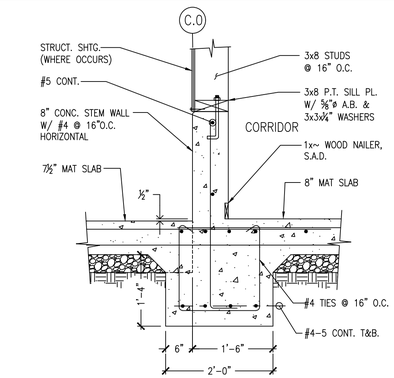

4	CURB DETAIL
3/4"=1' – 0"	

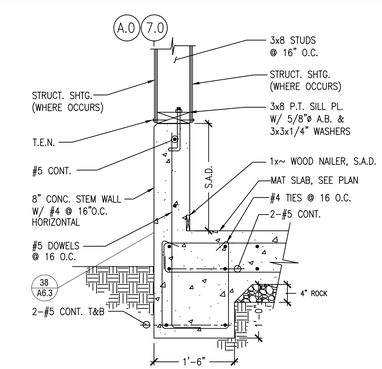

2	CURB DETAIL
1/2"=1' – 0"	

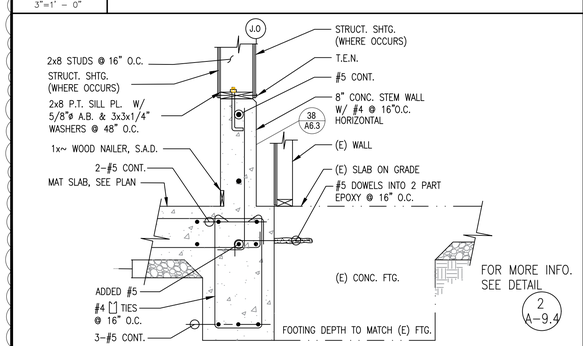

9	CURB DETAIL
3/4"=1' – 0"	

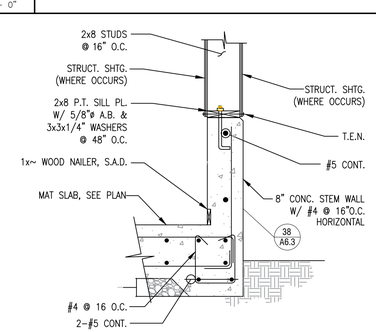

7	
3/4"=1' – 0"	

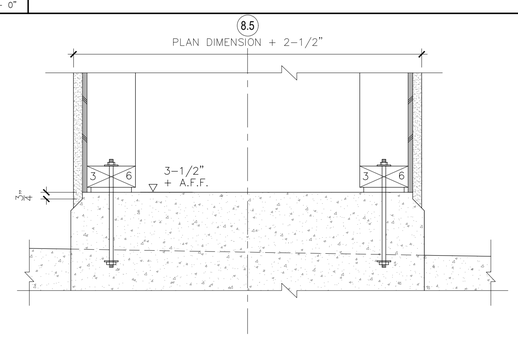

5	TYP. COLUMN
1 1/2"=1' – 0"	

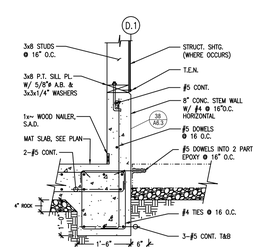

3	CURB DETAIL
1/2"=1' – 0"	

MUNOZ and ASSOCIATES ARCHITECTS
230 Capitol Street
Salinas, Ca. 93901
(831)320-0488

COPYRIGHT NOTICE

REGISTERED PROFESSIONAL ARCHITECT SALVADOR F. MUNOZ CA.18898 EXP. 11-30-2025 USA

JOB NUMBER
002-2018

REV	DATE	DESCRIPTION
1	06-01-21	REVISION
2	09-23-2021	REVISION
3	12-4-2024	FLOODPROOF REVISION

APN
117-323-011-000

OUR LADY OF ASSUMPTION CHURCH
100 SALINAS ROAD
(PAJARO) WATSONVILLE, CA 95076

SHEET TITLE
CURB DETAILS

SHEET NUMBER
A 9.4

DATE: 12-4-2024

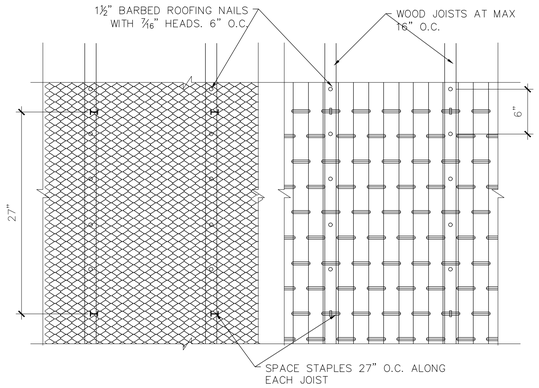

ATTACHING METAL LATH OR PAPER BACKED WIRE FABRIC TO WOOD FRAMED HORIZONTAL SURFACES

GALVANIZED ROOFING NAIL, BARBED, 11 GAGE

EARTHQUAKE STAPLES, 9 GAGE (ZINC PLATES)

39	TYP. OVERHEAD LATH ATTACHMENT DETAILS
N.T.S.	

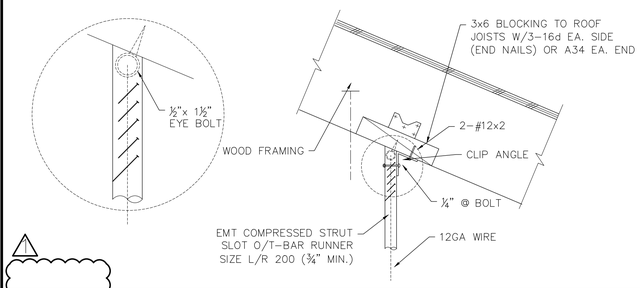

38	CONNECTION TO STRUCT
N.T.S.	

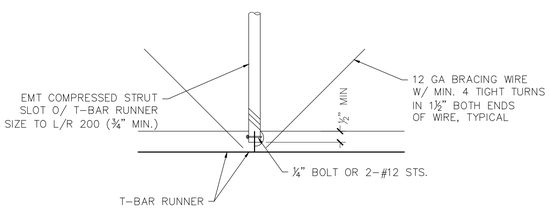

37	CONNECTION TO T-BAR
N.T.S.	

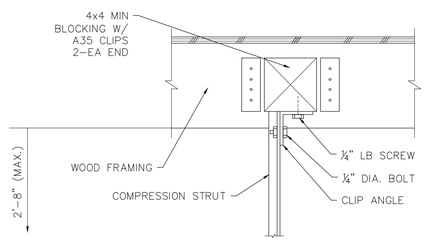

36	CONNECTION TO WOOD FRAMING	N.T.S.

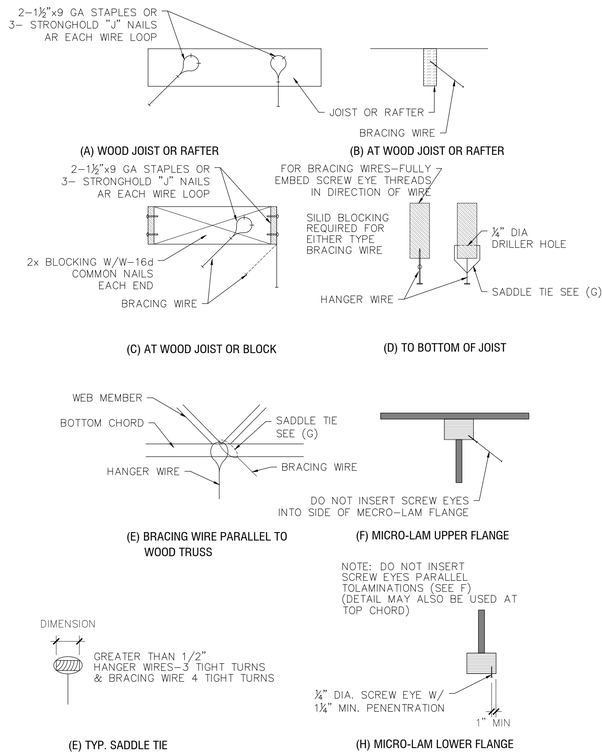

29	HANGER WIRE CONNECTION TO WOOD FRAMING
N.T.S.	

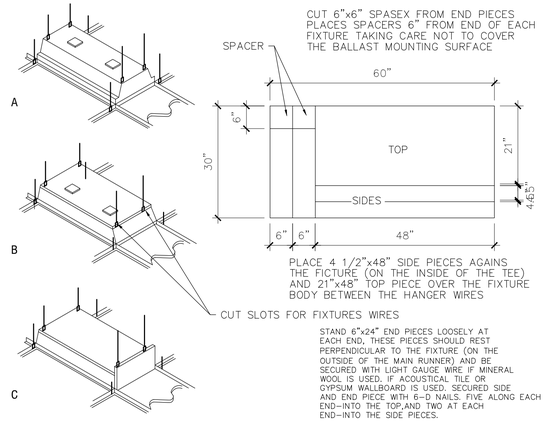

MATERIAL: U.L CLASSIFIED 1 1/4" THICK MINERAL WOOL BATTS 5/8" ACOUSTICAL MATERIAL, OR 5/8" GYPSUM BOARD. AS REQUIRED BY FIRE ASSEMBLY

27	FIXTURE PROTECTION
N.T.S.	

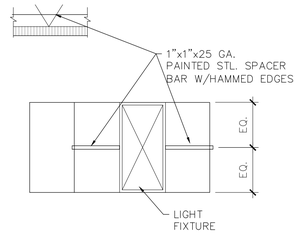

26	FIXTURE STABILIZER	N.T.S.

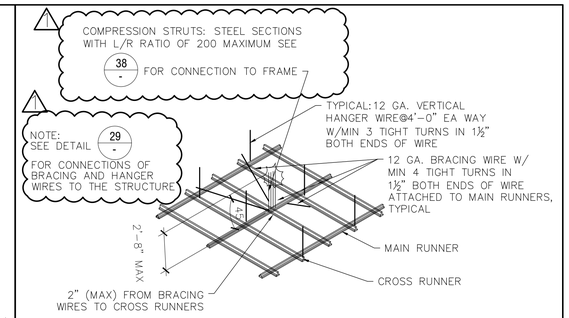

20	ACOUSTICAL CEILING GRID ATTACHMENT
N.T.S.	

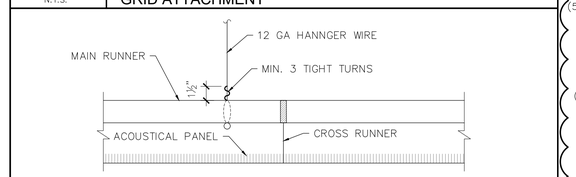

19	HANGER WIRE ATTACHMENT TO GRID
N.T.S.	

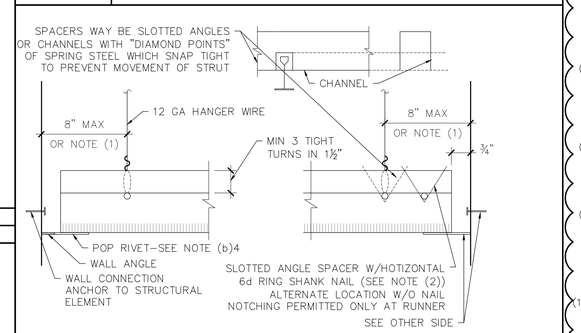

(1) 1/4 OF THELENGTH OF THE END RUNNER WHICHEVER IS LESS
(2) NAILS AT ENDS OF HORIZONTAL STRUTS ARE TO BE PLACED WITH NAIL TOWARD CENTERLINE OF SPAN OF STRUT.

18	HORIZONTAL STRUT - TYPICAL
N.T.S.	

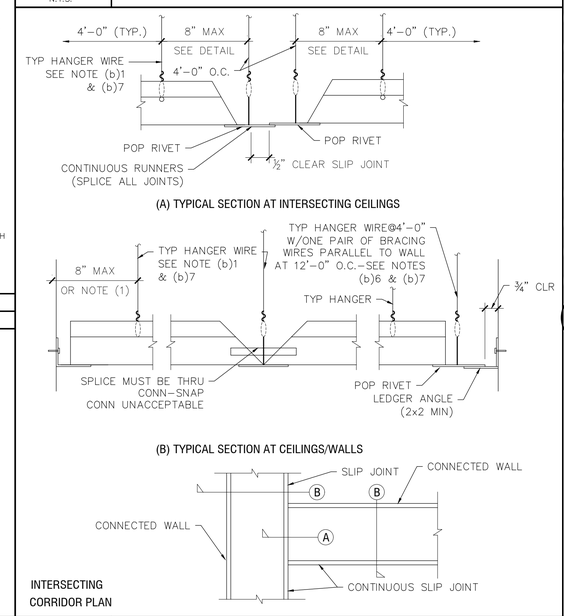

16	SLIP JOINTS AT INTERSECTING CEILINGS	N.T.S.

METAL SUSPENSION SYSTEM CEILINGS

(a) General.Requirements for design and installation of suspended/ acoustical ceiling sustems are contained in UBS Standard No.47-16 Ceiling to be installed in accordance with ASTM C635.

(b) Ceiling Notes. The following notes are for ceiling systems whose total wight including air conditioning grilles and light fixtures does not exceed four (4) paf:

(1) 12 ga.(min) hanger wires may be used for up to and including 4'-0"X4'-0" grid spacing main runners. Splices willno be permitted area.

(2) Provide 12 ga. hanger wires at the ends of all main and cross runners within 8" from the support or within ¼ of the length of the end tee, whichever is least, for the perimeter of the ceiling area

(3) Provide trapeze or other supplementary support members at obstructions to main hanger spacing. Provide additional hangers, struts or braces as required at all ceiling breaks, soffits or discontinuous areas. Hanger wire wires that are more than 1 in 6 out of plumb are to have counter-sloping wires.

(4) Ceiling grid members may be attached to not more than 2 adjacent walls. Ceiling grid members should be at least ½ inch free of other walls. if walls run diagonally to ceiling grid system runners, one end of main and cross runners should be free at a minimum of ¾ inch clear of wall

(5) At perimeter of the ceiling area where main cross runners are not connected to the adjacent wall, provide interconnection between the runners at the free end to prevent lateral spreading. A metal strut or a 16 ga. wire with a positive mechanical connection to the runner may be used. Where the perpendicular distance from the wall to the first parallel runner is 12" or less, this interlock is not required.

(6) Provide sets of four 12 ga. splayed bracing wires oriented 90 degrees from each other.

Provide bracing wires at locations not more than ½ the spacing given above from each perimeter wall and at the edge of vertical ceiling offsets.

the slope of these wires should not exceed 45 degrees from the plane of the ceiling and should be taut without causing the ceiling to lift. Splices in bracing wires are not to be permitted.

At each set of splay wires, install a strut fastened to the main runner and extended to and fastened to the structural members supporting the roof or floor induced by the bracine wire. the strut shall have an L/R ratio less than 200. 1-½" X16 ga. cold-rolled channel may be used for struts not exceeding 5'-3" in length.

(7) Fasten hanger wires with not less than 3 light turns. Fasten bracing wires with 4 tight turns. Make all light turns within a distance of 1-½" inches. Hanger or bracing wires anchors to the structure should be installed in such a manner that the direction of the wire aligns as closely as possible with the direction of the forces acting on the wire

(8) Separate all ceiling hanging and bracing wires at leas 6 inches from all unbraced ducts, pipes, conduit, etc. it is acceptable to attach lightweight items, such as single electrical conduit not exceeding ¾" nominal diameter, to hanger wires using connectors acceptable to the Architect and approving authority.

(9) When drilled-in concrete anchors or shot-in are used in reinforced concrete for hanger wires, 1 out of 10 must be field tested for 200 pounds of tension. When drilled-in concrete anchors are used for bracing wires, 1 out 2 must be field tested for 440 pounds in tension. Shot-in anchors in concrete are not permitted for bracing wires. If any shot-in or drilled-in anchor fails, all adjacent anchors must be tested.

(10) Attach all light fixtures to the ceiling grid runners to resist a horizontal force equal to the weight of the fixtures. Make attachment above ceiling grid and not visible from finished space below ceiling

(11) Flush or recessed light fixtures and air terminals or services weighing less than 56 pounds may be supported directly on the runners of a heavy duty grid system but, in addition, they must have a minimum of two 12 gal. slack safety wires attached to the fixture at diagonal corners and anchored to the structure above. All 4 ftx4 ft. light fixtures must have slack safety wires at each corner.

All flushed or recessed light fixtures and air terminals or services weighing 56 pounds or more must be independently supported by not less than 4 taut 12 ga. wires each attached to the fixture and to the structure above regardless of the type of ceiling grid system used.

(12) all fixtures and air terminals or services supported on intermediate duty grid system must be independently supported by not less than 4 taut 12 ga. wires each attached to the fixture or terminal and to the structure above.

(13) Support surface-mounted light fixtures by at least two positive devices which surround the ceiling runner and which are each supported from the structure above by a 12 ga. wire Spring clips or clamps that connect only to the runner are not acceptable.

Provide additional when light fixtures are 8 feet or longer.

(14) Support pendant-mounted light fixtures directly from the structure above with hanger wires or cables passing through each pendant hanger and capable of supporting 4 times the weight of the fixtures (see also Note 10) Special details are necessary for this condition at the ceiling grid.

(15) Non-Fire Resistance Rated Suspension System

	Chicago Metalic Corp.	Donn Corp
Classification of Ceiling Grid:	Heavy duty	
Manufacturer's catalog number-main runner	1811	DX 24
Manufacturer's catalog number-cross runner	1802	DX 216
Manufacturer's detail for runner splice	Bayonet couplings	

(16) Fire resistance Rated Suspension System

Classification of Ceiling Grid:	Heavy duty	
Manufacturer's catalog number-main runner	1850	DX 24
Manufacturer's catalog number-cross runner	1852	DX 216
Manufacturer's detail for runner splice	Bayonet couplings	

(17) Refer to typical ceiling details for additional information

16 18 19 29

6	TYPICAL CEILING NOTES

MUNOZ and ASSOCIATES ARCHITECTS
230 Capitol Street
Salinas, Ca. 93901
(831)320-0488

COPYRIGHT NOTICE

REGISTERED PROFESSIONAL ARCHITECT SALVADOR F. MUNOZ CA.18898 EXP. 11-30-2025 USA

JOB NUMBER
002-2018

REV	DATE	DESCRIPTION
1	06-01-21	REVISION
2	09-23-2021	REVISION
3	12-4-2024	FLOODPROOF REVISION

APN
117-323-011-000

OUR LADY OF ASSUMPTION CHURCH
100 SALINAS ROAD
(PAJARO) WATSONVILLE, CA 95076

SHEET TITLE
TYPICAL CEILING DETAILS

SHEET NUMBER
A 9.5

DATE: 12-4-2024

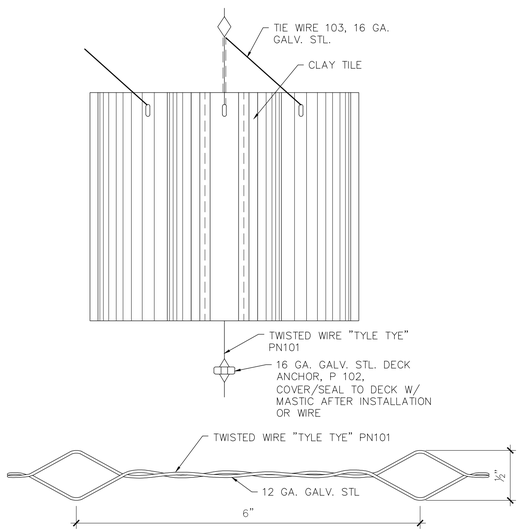

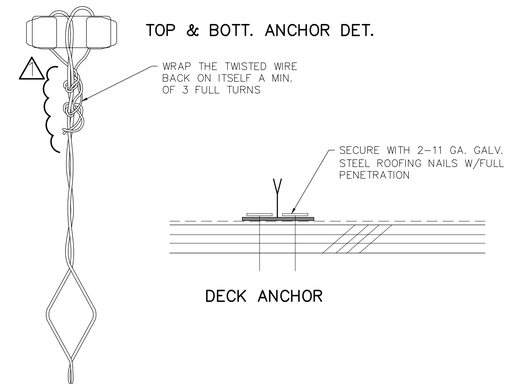

36 CLAY TILE ANCHORS
N.T.S.

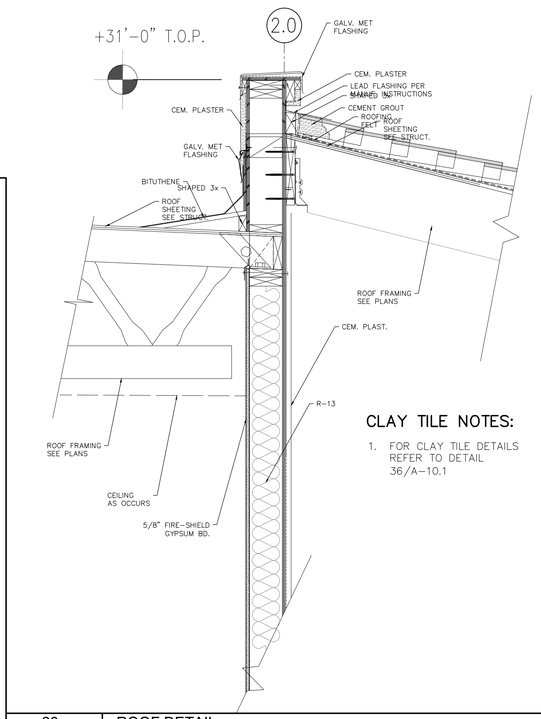

CLAY TILE NOTES:

1. FOR CLAY TILE DETAILS REFER TO DETAIL 36/A-10.1

28 ROOF DETAIL
3"=1'-0"

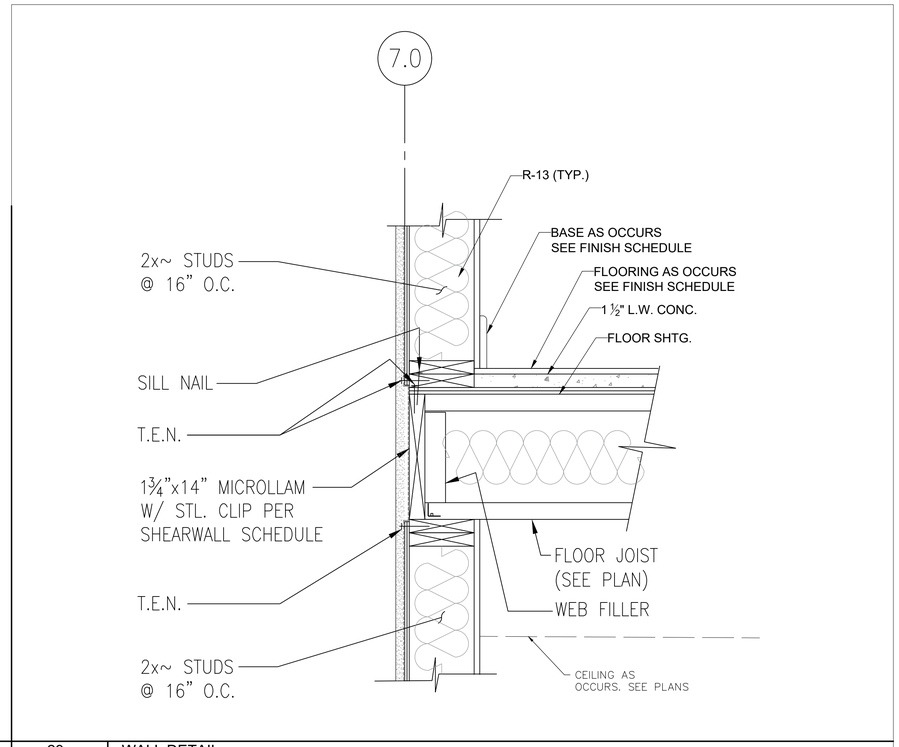

29 WALL DETAIL
1-1/2"=1'-0"

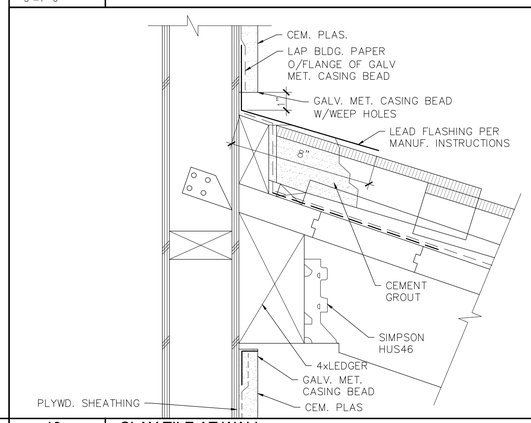

19 CLAY TILE AT WALL
3"=1'-0"

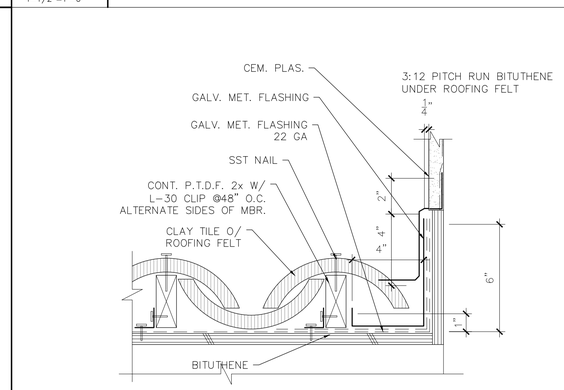

18 ROOF FLASHING DETAIL
3"=1'-0"

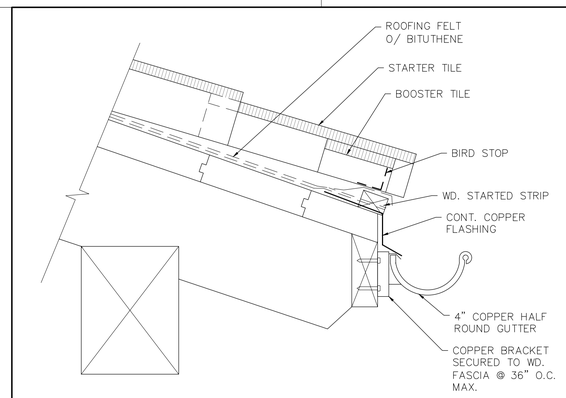

10 CLAY TILE @ EAVE
3"=1'-0"

MUNOZ and ASSOCIATES ARCHITECTS
230 Capitol Street
Salinas, Ca. 93901
salvador.munoz@sfmunozarchitects.com
www.sfmunozarchitects.com
(831)320-0488

COPYRIGHT NOTICE

REGISTERED PROFESSIONAL ARCHITECT
SALVADOR F. MUNOZ
CA.18898
EXP. 11-30-2025
CALIFORNIA, USA

JOB NUMBER
002-2018

REV	DATE	DESCRIPTION
1	06-01-21	REVISION
2	09-23-2021	REVISION
3	12-4-2024	FLOODPROOF REVISION

APN
117-323-011-000

OUR LADY OF ASSUMPTION CHURCH
100 SALINAS ROAD
(PAJARO) WATSONVILLE, CA 95076

SHEET TITLE
ROOF DETAILS

SHEET NUMBER
3
A 10.1

DATE: 12-4-2024

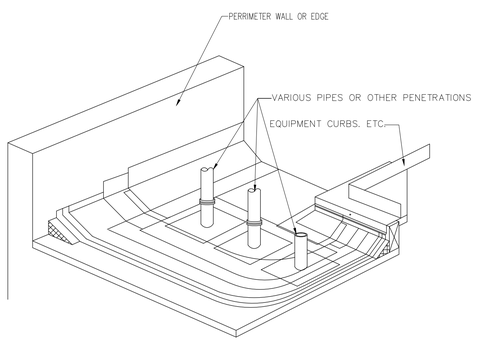

41	ROOF INSULATION DETAIL
N.T.S	

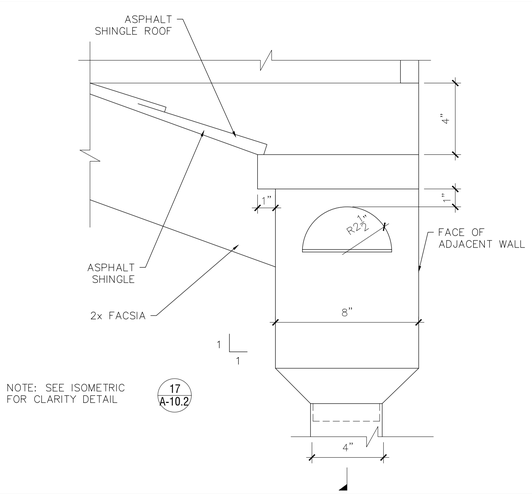

28	ELEVATION OF CONDUCTOR HEAD
3"=1'-0"	

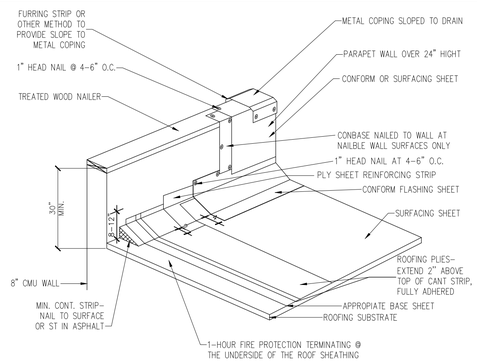

40	FULLY ADHERED ROOF ACUPPER
N.T.S	

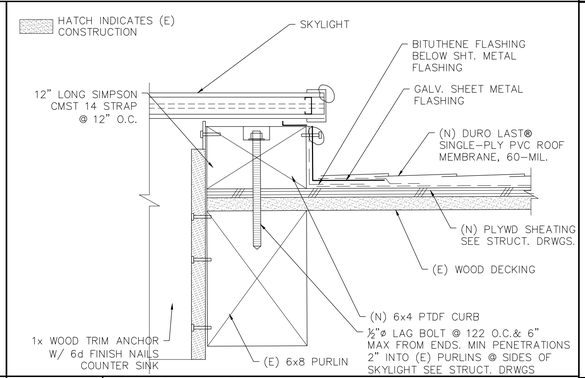

38	SKYLIGHT FLASH'G DTL
3"=1'-0"	

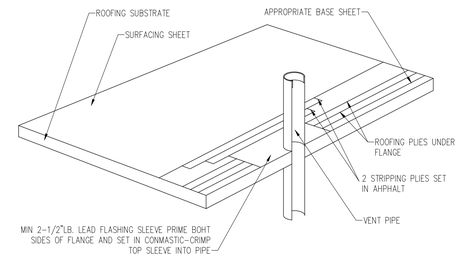

42	ROOF INSULATION DETAIL
N.T.S	

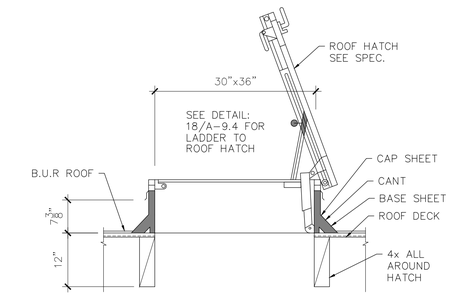

30	ROOF HATCH DETAIL
3/4"=1'-0"	

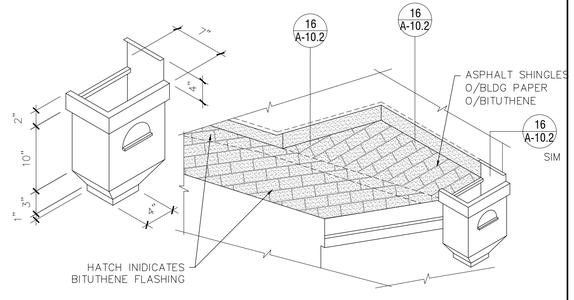

17	ISOMETRIC OF CONDUCTOR HEAD & FLASHING
N.T.S.	

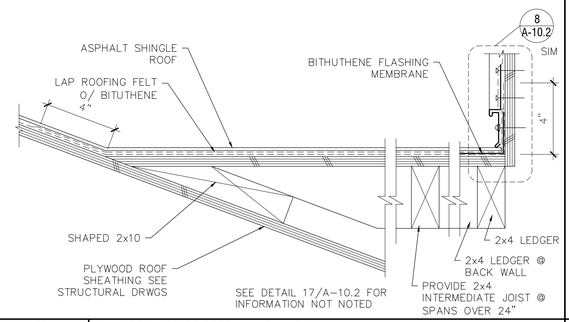

16	FLASHING CRICKET DETAIL
3"=1'-0"	

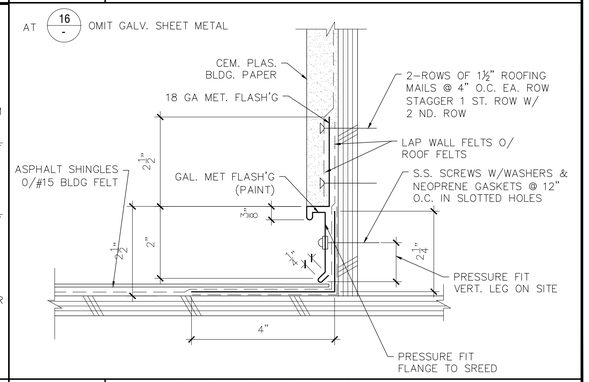

8	ASPHALT SHINGLE ROOFING @ WALL
6"=1'-0"	

MUNOZ and ASSOCIATES ARCHITECTS
230 Capitol Street
Salinas, Ca. 93901
salvador.munoz@sfmunozarchitects.com
www.sfmunozarchitects.com
(831)320-0498

COPYRIGHT NOTICE

REGISTERED PROFESSIONAL ARCHITECT
SALVADOR F. MUNOZ
CA.18898
EXP. 11-30-2025
STATE OF CALIFORNIA

JOB NUMBER
002-2018

REV	DATE	DESCRIPTION
1	06-01-21	REVISION
2	09-23-2021	REVISION
3	12-4-2024	FLOODPROOF REVISION

APN
117-323-011-000

OUR LADY OF ASSUMPTION CHURCH
100 SALINAS ROAD
(PAJARO) WATSONVILLE, CA 95076

SHEET TITLE
ROOF DETAILS

SHEET NUMBER
A 10.2

DATE: 12-4-2024

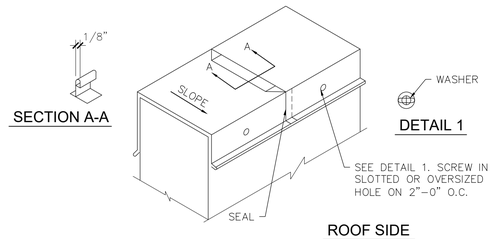

SEE 38/A-10.3 FOR INFORMATION NOT NOTED

39	FLAT STANDING SEAM PARAPET CAP DETAIL
NTS	

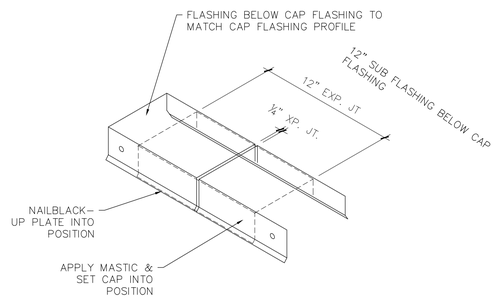

INSTALL EXPANSION JTS. @ 40'–0" O.C. MAX.

38	ISOMERIC OF FLASHING
NTS	

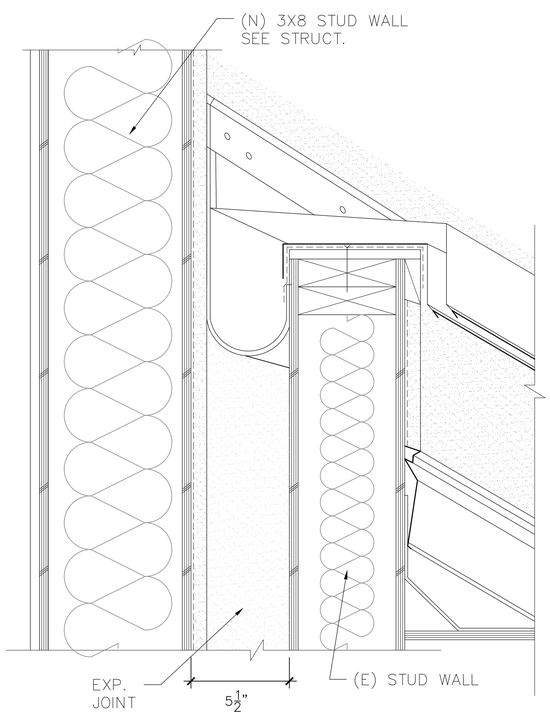

36	ISOMETRIC EXP. JOINT @ WALL COVER
NTS	

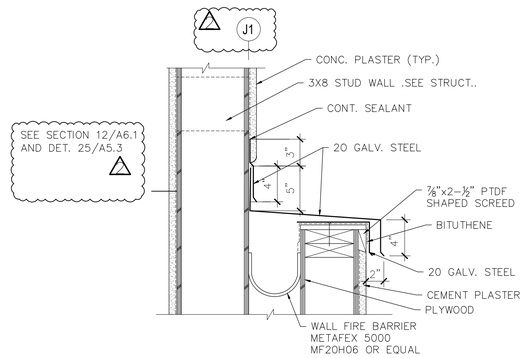

28	EXPANSION JOINT DETAIL
1 1/2"=1'–0"	

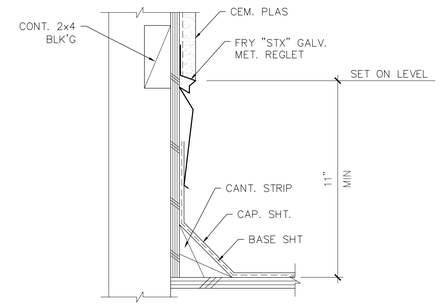

9	FLASHING @ WALL DETAIL
3"=1'–0"	

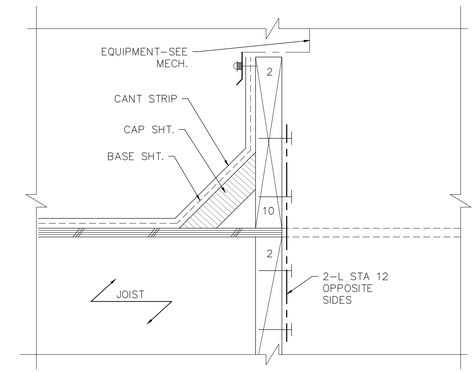

8	FLASHING @ EQUIPMENT CURB
3"=1'–0"	

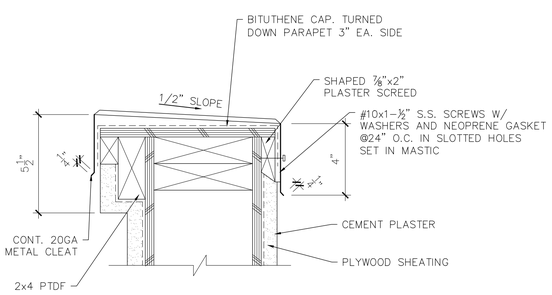

27	FLASHING
3"=1'–0"	

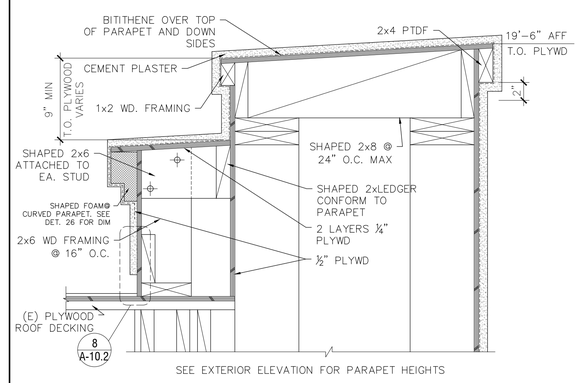

17	PARAPET DETAIL
1 1/2"=1'–0"	

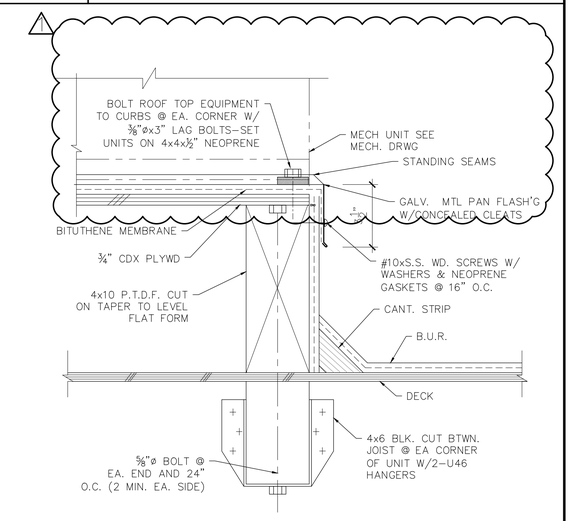

7	MECHANICAL UNIT CURB
3"=1'–0"	

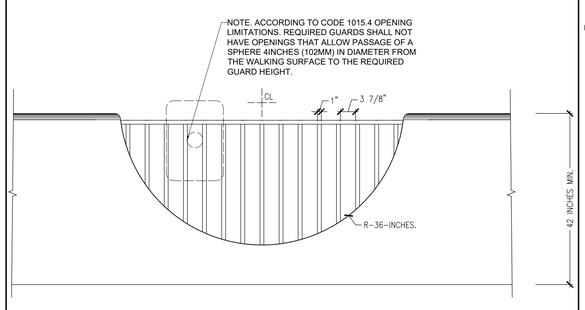

26	GUARD DETAIL
N.T.S.	

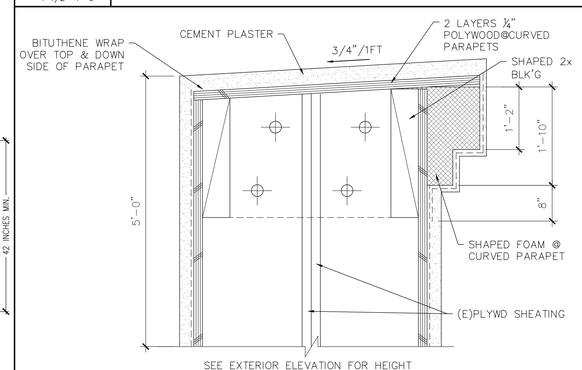

16	PARAPET DETAIL
3"=1'–0"	

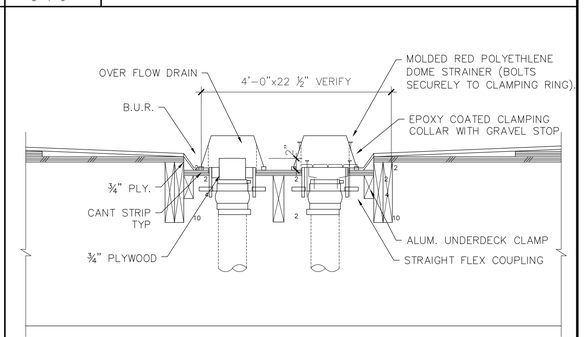

6	ROOF DRAIN DETAIL
3"=1'–0"	

MUNOZ and ASSOCIATES ARCHITECTS
230 Capitol Street
Salinas, Ca. 93901
salvador.munoz@sfmunozarchitects.com
www.sfmunozarchitects.com
(831)320-0488

COPYRIGHT NOTICE

REGISTERED PROFESSIONAL ARCHITECT SALVADOR F. MUNOZ CA.18898 EXP. 11–30–2025 CALIFORNIA

JOB NUMBER
002-2018

REV	DATE	DESCRIPTION
1	06-01-21	REVISION
2	09-23-2021	REVISION
3	12-4-2024	FLOODPROOF REVISION

APN
117-323-011-000

OUR LADY OF ASSUMPTION CHURCH
100 SALINAS ROAD
(PAJARO) WATSONVILLE, CA 95076

SHEET TITLE
ROOF DETAILS

SHEET NUMBER
A 10.3

DATE: 12-4-2024

STRUCTURAL ABBREVIATIONS

@	AT
#	NUMBER
AB	ANCHOR BOLTS
AC	ASPHALTIC CONCRETE
ADDNL	ADDITIONAL
AFF	ABOVE FINISH FLOOR
AGG	AGGREGATE
ALT	ALTERNATE
ALUM	ALUMINUM
APPROX	APPROXIMATE
ARCH	ARCHITECTURAL
BLDG	BUILDING
BLK	BLOCK
BLKG	BLOCKING
BM	BEAM
BN	BOUNDARY NAILING
BOC	BOTTOM OF CONCRETE
BOF	BOTTOM OF FOOTING
BOT	BOTTOM
BP	BUTTON PUNCH
BRG	BEARING
BRG PL	BEARING PLATE
BTW	BETWEEN
CCJ	CRACK CONTROL JOINT
CC	CENTER TO CENTER
CIP	CAST IN PLACE
CJ	CONSTRUCTION JOINT
CTR	CENTER
CL	CENTER LINE
CLG	CEILING
CLR	CLEAR
CMU	CONCRETE MASONRY UNIT
COL	COLUMN
CONC	CONCRETE
CONN	CONNECTION
CONSTR JT	CONSTRUCTION JOINT
CONT	CONTINUOUS
CP	COMPLETE PENETRATION
CTSK	COUNTER SINK
DBL	DOUBLE
DEPR	DEPRESSED
DF	DOUGLAS FIR
DIA, (ø)	DIAMETER
DIAG	DIAGONAL
DIM	DIMENSION
DN	DOWN
DWG	DRAWING
(E)	EXISTING
EA	EACH
EF	EACH FACE
EN	EDGE NAILING
EW	EACH WAY
EJ	EXPANSION JOINT
EL	ELEVATION
EOS	EDGE OF SLAB
EQ	EQUAL
EXP B	EXPANSION BOLT
EXT	EXTERIOR
FF	FINISH FLOOR
FG	FINISH GRADE
FHWS	FLAT HEAD WOOD SCREW
FL	FULL LENGTH
FN	FIELD NAILING
FND	FOUNDATION
FOC	FACE OF CONCRETE
FOM	FACE OF MASONRY
FOS	FACE OF STUD
FT (')	FOOT/FEET
FTG	FOOTING
FV	FIELD VERIFY
GA	GAUGE
GALV	GALVANIZED
GL	GLUE LAMINATED LUMBER
GWB	GYPSUM WALL BOARD
HAS	HEADED ANCHOR STUD
HDR	HEADER
HK	HOOK
HORIZ	HORIZONTAL
HSB	HIGH STRENGTH BOLT
ID	INSIDE DIAMETER
IN (")	INCH
INT	INTERIOR
JST	JOIST
JT	JOINT
JH	JOIST HANGER
LLH	LONG LEG HORIZONTAL
LLV	LONG LEG VERTICAL
LS	LAG SCREW
LT WT	LIGHT WEIGHT
LG	LONG
LWC	LIGHT WEIGHT CONCRETE
MAX	MAXIMUM
MB	MACHINE BOLT
MCJ	MASONRY CONTROL JOINT
MECH	MECHANICAL
MEZZ	MEZZANINE
MIN	MINIMUM
MISC	MISCELLANEOUS
MIW	MALLEABLE IRON WASHER
MTL	METAL
NIC	NOT IN CONTRACT
NOM	NOMINAL
NTS	NOT TO SCALE
(N)	NEW
OC	ON CENTER
OD	OUTSIDE DIAMETER
OPG	OPENING
OPH	OPPOSITE HAND
PCC	PRECAST CONCRETE
PERP	PERPENDICULAR
PL	PLATE
PLWD	PLYWOOD
PP	PARTIAL PENETRATION
PSF	POUNDS PER SQUARE FOOT
PSI	POUNDS PER SQUARE INCH
PT	PRESSURE TREATED
R	RADIUS
REINF	REINFORCING
REQ'D	REQUIRED
SAD	SEE ARCHITECTURAL DRAWINGS
SIM	SIMILAR
SJ	SHRINKAGE JOINT
SLH	SHORT LEG HORIZONTAL
SLV	SHORT LEG VERTICAL
SM	SHEET METAL
SOG	SLAB ON GRADE
SQR	SQUARE
SS	STAINLESS STEEL
STD	STANDARD
STL	STEEL
SWS	SHEAR WALL SCHEDULE
SYM	SYMMETRICAL
T 24	TITLE 24 CALIFORNIA CODE
TEN	TYPICAL EDGE NAILING
THK	THICK
TOC	TOP OF CONCRETE
TOF	TOP OF FOOTING
T.O.SLAB	TOP OF SLAB
TOS	TOP OF STEEL
TOW	TOP OF WALL
TS	TUBE STEEL
TYP	TYPICAL
T&B	TOP AND BOTTOM
TN	TOE NAIL
UNG	UNDISTURBED NATURAL GRADE
UON	UNLESS OTHERWISE NOTED
WWF	WELDED WIRE FABRIC
W/	WITH

STRUCTURAL SYMBOLS

MATCH LINE
SHADED PORTION IS SIDE CONSIDERED

WORK POINT, CONTROL POINT
OR DATUM POINT

A
12 GRID LINES

A / S4.1 BUILDING SECTION
SECTION LETTER
SHEET WHERE DRAWN W/DISCIPLINE PREFIX

A / S4.1 WALL SECTION
SECTION LETTER
SHEET WHERE DRAWN W/DISCIPLINE PREFIX

7 / S4.1 DETAIL NUMBER
SHEET WHERE DRAWN W/DISCIPLINE PREFIX

7 / S4.1 ELEVATION NUMBER FRAMING ELEVATION
SHEET WHERE DRAWN

STRUCTURAL MATERIALS

EARTH

ROCK FILL

SAND/MORTAR/PLASTER

CONCRETE (CAST-IN-PLACE OR PRECAST)

CONCRETE BLOCK (CMU)

STEEL CROSS SECTION

WOOD FRAMING THRU MEMBER

WOOD FRAMING INTERRUPTED MEMBER

PLYWOOD

QUALITY CONTROL

SPECIAL INSPECTIONS

1. Special inspection per CBC Section 1704, 1705, 1707 & 1708 is required on the following:

a. Masonry (Section 1705.4)	
i. Where F'm is greater than 1500 psi	NR
ii. Reinforcement and grout placement in masonry with special inspection	NR
b. Concrete (Section 1705.3)	
i. Where F'c is greater than 2500 psi, except for slab on grade	NR
ii. Reinforcement placement in concrete with special inspection	NR
iii. Anchor bolts in tension (where noted on drawings)	NR
c. Welding (section 1705.3.1)	
i. Ductile moment resisting steel frames per CBC Section 2204.1	NR
ii. All structural welding except welding performed in an approved fabricator's shop.	NR
d. All high strength bolting in "slip-critical" connections. See plans and steel notes for location of "slip-critical" connections.	NR
e. Special diaphragm nailing (Nail Spacing 4" O.C. or Less)	●
f. Drilled or Epoxy concrete and masonry anchors	●
● REQUIRED	NR NOT REQUIRE

2. The special inspector shall be under the supervision of a registered professional engineer.
   a. The special inspector shall observe the work assigned for conformance with the approved design drawings and specifications.
   b. The special inspector shall furnish inspection reports to the Building Official, Engineer or Architect of Record and other designated persons. All discrepancies shall be brought to the immediate attention of the contractor for correction, then, if not corrected, to the proper design authority and to the Building Official.
   c. The Special Inspector shall submit a final signed report, signed by a registered professional engineer, stating whether the work requiring special inspection was in conformance with the approved plans and specifications and the applicable workmanship provisions of the CBC.
   d. An application for off-site fabrication must be submitted to the field inspection division for approval prior to fabrication.
   e. Certificate of compliance for off site fabrication must be completed and submitted to the field inspection division prior to the erection of prefabricated components.
3. The contractor shall contact the Planning and Building Inspection Department to schedule Special Inspection meeting prior to construction.

BASIS OF DESIGN

Floor Live Load = 100 psf
Roof Live Load = 20 psf (Reducible)
Wind Design Data:
Basic Wind Speed (3-mile gust) = 110 mph
Wind Importance Factor I = 1.00
Wind Exposure = C
Earthquake Design Data:
Seismic Importance Factor I = 1.00
Occupancy Category = II
Mapped Spectral Response Accelerations,
S_s = 2.35
S_1 = 0.90
Site Class =
Spectral Response Coefficients,
S_{DS} = 1.88

Seismic Design Category = D
Basic Seismic-Force Resisting System = Light-framed walls sheathed with wood structural panels rated for shear resistance.

Response Modifications Factor,
R = 6.5
Analysis Procedures Used:
Wind - Simplified Procedure
Seismic - Simplified Lateral Force Analysis Procedure

For additional information see California Building Codes, ASCE Standard (Minimum Design Loads for Buildings and Other Structures, ACI (Building Code Requirements for Structural Concrete & Commentary), MSJC (Building Code Requirements & Specification for Masonry Structures), AISC (Steel Construction Manual & Seismic Design Manual) and any other applicable codes or references to the California Building Code, Applicable at the time of Permit Application and/or Permit Issuance.

STRUCTURAL NOTES

I. GENERAL

1. All construction, workmanship and materials shall conform with the requirements of the 2022 Edition C.B.C., and any other governing code.
2. The contractor shall verify all dimensions, elevations and site conditions and shall become completely familiar with the construction documents prior to starting construction.
3. The Architect and Engineer shall be notified of any omissions or discrepancies in the working drawing and/or specifications before proceeding with any work so involved.
4. All dimensions take precedence over scale shown on plans, sections and details.
5. Specific notes and details take precedence over structural notes and typical details.
6. Where specific details are not provided, construction can follow details for similar conditions, unless conflicts occur.
7. The contractor shall be responsible for the design, installation and maintenance of all bracing and shoring required during construction until all construction is finalized.
8. Job site safety is the sole responsibility of the contractor.
9. See architectural drawings for the size and location of all door and window openings, location of non-bearing partitions, roof an floor elevations, roof slopes, architectural finishes, and other related information not indicated on the structural drawings.
10. See mechanical, electrical and/or architectural drawing for the size and location of pipes, conduits, floor drains, vents, ducts, and other similar penetrations not indicated on the structural drawings.

II. FOUNDATIONS

1. All foundation and related site work shall comply with the requirements of Chapter 18 of the C.B.C.
2. Foundations have been designed for a maximum allowable skin friction of: 500 PSF D.L. +L.L., and a soil bearing capacity of: 1,000 PSF D.L. +L.L., in accordance with geotechnical investigation report No. M11895.1 dated AUGUSTS 31, 2022, prepared by HARO, KASUNICH & ASSOCIATES, INC.
3. The above mentioned geotechnical investigation report including all its findings and recommendations is part of the structural notes.
4. If actual site conditions vary from those in the report the Architect and Geotechnical Engineer shall be notified immediately and prior to proceeding with any work so involved.
5. The Geotechnical Engineer or his designated representative shall inspect and approve all foundation excavation prior to foundation placement.
6. For compaction, trenching, backfill, slope stability and other requirements, see the geotechnical investigation report referenced above.

III. CONCRETE

Reinforcing Steel

1. Reinforcing bars shall conform to ASTM A615 for deformed bars Grade 40 for #4 bars and smaller, and Grade 60 for #5 bars and larger.
2. All bars shall be clean of rust, grease or other materials likely to impair bond.
3. All reinforcing bar bends shall be made cold and conform to the ACI Manual of Standard Practice.
4. Reinforcing bars shall be wired together at splices as follows:

REINFORCING CONCRETE

REINFORCEMENT DEVELOPMENT LENGTHS: (LENGTH IN INCHES) $f'c$ = 2500 PSI AT 28 DAYS

BAR SIZE	#3 GR40	#4	#5	#6	#7	#8	#9	#10	#11
TOP	16	32	39	47	69	78	88	100	110
OTHER	12	24	30	36	53	60	68	77	85

REINFORCEMENT LAP SPLICES: (LENGTH IN INCHES) $f'c$ = 2500 PSI AT 28 DAYS

BAR SIZE	#3	#4	#5	#6	#7	#8	#9	#10	#11
* TOP BARS	21	42	51	62	90	102	115	130	143
OTHER BARS	16	32	39	47	69	78	89	101	111

TOP REINFORCING IS HORIZONTAL REINFORCEMENT THAT HAS MORE THAN TWELVE INCHES OF CONCRETE PLACED BELOW IT.

USE WELDED SPLICE OR MECHANICAL CONNECTOR IF THE LAP SPLICE REINFORCEMENT DOES NOT HAVE A MINIMUM SPACING $3d_b$+1/8 INCHES AND A MINIMUM COVER OF d_b+1/8 INCHES

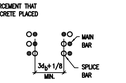

WELDED SPLICE (DIRECT BUTT SPLICES-FULL PENETRATION)
#5 AND SMALLER SINGLE-BEVEL GROOVE WELD
#6 AND LARGER DOUBLE-BEVEL GROOVE WELD
WELDS SHALL HAVE THE ABILITY TO DEVELOP 125 PERCENT OF THE YIELD STRENGTH FOR THE SPLICED REINFORCEMENT (75 KSI)

MECHANICAL CONNECTORS
MECHANICAL CONNECTORS SHALL BE TENSION-COMPRESSION TYPE WITH THE ABILITY TO DEVELOP 125 PERCENT OF THE YIELD STRENGTH FOR THE SPLICED REINFORCEMENT (75KSI). ALSO, MECHANICAL CONNECTORS SHALL HAVE AND BE INSTALLED PER AN EVALUATION REPORT FROM ICBO EVALUATION SERVICE, INC.

5. Unless otherwise noted, minimum concrete coverage for reinforcing bars shall be as follows:

Concrete in contact with earth, unformed	3"
Concrete in contact with earth, formed	2"
Walls (interior face)	1"
Slab on grade	1-1/2"

III. CONCRETE (CONT.)

Cast-in-Place Concrete

1. All concrete used for this work shall comply with A.C.I. "Specifications for Structural Concrete" (A.C.I. 318-19). The material used to prepare the concrete shall meet the following standards:

Water	Clean, Potable
Portland cement	ASTM C150
Coarse aggregate	3/4" rock ASTM C33
Fine aggregate clean sand	ASTM C33-77

2. All concrete used for this work shall be proportioned to meet the following 28 day ultimate compressive strength requirements:

Concrete Walls (12" THICK)	150 PCF. f' c =	4000 PSI
Raised Floor Deck Slab (6½")	150 PCF. f' c =	4000 PSI
Footings	150 PCF. f' c =	2500 PSI
Grade beams and piers	150 PCF. f' c =	2500 PSI
Slab on grade	150 PCF. f' c =	2500 PSI

3. Add mixtures shall not be used unless specifically authorized by the Engineer.
4. A mix design including proposed admixtures and supporting test data for strength and shrinkage shall be submitted for review and approval prior to concrete placement.
5. All reinforcing bars, anchor bolts, hold-downs and other embeds shall be well secured in place prior to concrete placement.
6. All reinforcement and other embeds shall be inspected and approved prior to concrete placement.
7. Concrete shall be placed as a continuous operation without any interruptions longer than 45 minutes.
8. The slump at time of placement shall be the minimum consistent with placing conditions but shall not exceed 4"
9. Mechanical vibrators or other "approved" methods for thorough consolidation shall be used. For slab on grade, approved grid tampers may be used.

IV. MASONRY (NOT USED)

V. STRUCTURAL STEEL (NOT USED)

REVISIONS	BY

REGISTERED PROFESSIONAL ENGINEER GLEN JOHNSON No. C 66027 Exp. 6/30/2026 CIVIL STATE OF CALIFORNIA

CCE
CENTRAL COAST ENGINEERS, INC.
STRUCTURAL DESIGN
P.O. BOX 2503
SALINAS, CA 93902
P 831.757.5534
F 831.757.2226

PROJECT TITLE:
OUR LADY OF ASSUMPTION CHURCH
100 SALINAS ROAD, PAJARO, CA 95076
APN # 117-323-011-000

SHEET TITLE:
STRUCTURAL NOTES

JOB No.	CCE-23-089
DATE:	10/31/2024
SCALE:	AS NOTED
DRAWN BY:	O.R.
SHEET No.:	S0.0
# OF SHEETS	

STRUCTURAL NOTES

VI. WOOD

Rough Carpentry

1. All structural wood work shall be done in accordance with the provisions of Chapter 23 of the 2022 Edition of the C.B.C.
2. All structural lumber shall be Douglas Fir–Larch of the grade indicated below or better, unless otherwise noted on plans.

Horiz. framing 2x or smaller	No. 2
Horiz. framing 4x or larger	No. 1
2 x 4 studs & blocking	No. 2
2 x 6 & larger studs & blocking	No. 2
4 x 4 post	No. 2
5 x 5 posts or larger	No. 1
Wall plates	No. 1
Wood sill	P.T. No. 1

3. All nails shall be common steel wire nails sized and spaced as specified on the drawings, schedules and in Table 2304.10.2 of the California Building Code. (See adjacent Table).
   Fasteners, including nuts and washers, in contact with P.T. wood shall be of hot–dipped zinc–coated galvanized steel, stainless steel, silicon bronze or copper. (2304.10.6.1).
4. Rough hardware where exposed shall be galvanized and conform to the following:

Bolts	ASTM 307 & 2018 NDS
Plate Hardware	Simpson or equal
Hangers	Simpson or equal
Other Accessories	Simpson or equal

   For size and spacing see plans.
5. Stud walls shall be framed with full height studs at 16" O.C. (U.O.N. on drawings). Horizontal blocking shall be installed in all walls and partitions where studs are greater than eight feet in height.
6. All wood sills for structural walls shall be attached to concrete slabs or foundations with 5/8" diameter x 12" anchor bolts at 4'–0" maximum spacing (U.O.N.). With Simpson's Bearing Plate BP 5/8 – 3 over each anchor bolt. Use BP 5/8 S with included SDS screws if sill plate hole was drilled over 11/16"ø
7. Wood sills for interior non–structural partitions may be attached with powder drive pins per local code requirements.
8. All structural walls shall have double top plates, lapped a minimum of 4'–0" at splices and nailed with 12–16d nails each piece (U.O.N.)
9. Penetrations in wood sills or plates of bearing or shear walls shall be placed in the center and shall be no greater in diameter than 1/3 the width of the member. Holes larger than those noted above may be bored "only" if plates are considered cut and adequate reinforcement is provided.
10. Cutting, boring, or notching of girders, beams, joists and other structural elements shall not be permitted without the approval of the engineer or are specifically detailed on the working drawings.
11. Holes for bolts in wood shall be drilled 1/16" larger than bolt diameter. Metal washers shall be provided for all head and nuts of bolts and lag screws that bear on wood.
12. All bolts and screws shall be tightened at the time of erection and retightened before completion of work or installations that would make the bolts inaccessible.
13. Use double floor joists at nonbearing partitions when parallel to floor framing. Use continuous solid blocking when perpendicular to floor joists.

WOOD (Continued)

TABLE 2304.10.2
FASTENING SCHEDULE 2022 CBC

DESCRIPTION OF BUILDING ELEMENTS	NUMBER AND TYPE OF FASTENERS	SPACING AND LOCATION
Roof		
1. Blocking between ceiling joist, rafters or trusses to top plate or other framing below	4–8d box (2½"x0.113"); or 3–8d common (2½"x0.131"); or 3–10d box (3"x 0.128"); or 3–3"x0.131" nails; or 3–3" 14 gage staples, 7/16" crown	Each end, toenail
Blocking between rafters or truss not at the wall top plate, to rafter or truss	2–8d common (2½"x0.131") 2–3"x0.131" nails 2–3" 14 gage staples	Each end, toenail
	2–16d common (3½"x0.162") 3–3"x0.131" nails 3–3" 14 gage staples	End nail
Flat blocking to truss and web filler	16d common (3½"x0.162") @ 6" o.c. 3"x0.131" nails @ 6" o.c. 3"x14 gage staples @ 6" o.c.	Face nail
2. Ceiling joists to top plate	4–8d box (2½"x0.113"); or 3–8d common (2½"x0.131"); or 3–10d box (3"x 0.128"); or 3–3"x0.131" nails; or 3–3" 14 gage staples, 7/16" crown	Each joist, toenail
3. Ceiling joist not attached to parallel rafter, laps over partitions (no thrust) (see Section 2308.7.3.1 Table 2308.7.3.1)	3–16d common (3½"x0.162"); or 4–10d box (3"x 0.128"); or 4–3"x0.131" nails; or 4–3" 14 gage staples, 7/16" crown	Face nail
4. Ceiling joist attached to parallel rafter (heel joint) (see Section 2308.7.3.1 Table 2308.7.3.1)	Per Table 2308.7.3.1	Face nail
5. Collar tie to rafter	3–10d common (3"x0.148"); or 4–10d box (3"x 0.128"); or 4–3"x0.131" nails; or 4–3" 14 gage staples, 7/16" crown	Face nail
6. Rafter or roof truss to top plate (see Section 2308.7.5, Table 2308.7.5	3–10d common (3"x0.148"); or 3–16d box (3½"x135"); or 4–10d box (3"x 0.128"); or 4–3"x0.131" nails; or 4–3" 14 gage staples, 7/16" crown	2 toenails on one side and 1 toenail on opposite side of rafter or truss[c]
7. Roof rafters to ridge valley or hip rafters; or roof rafter to 2–inch ridge beam	2–16d common (3½"x0.162"); or 3–16d box (3½"x 0.135"); or 3–10d box (3"x 0.128"); or 3–3"x0.131" nails; or 3–3" 14 gage staples, 7/16" crown; or	End nail
	3–10d common (3½"x0.148"); or 4–16d box (3½"x 0.135"); or 4–10d box (3"x 0.128"); or 4–3"x0.131" nails; or 4–3" 14 gage staples, 7/16" crown	Toenail
Wall		
8. Stud to stud (not at braced wall panels)	16d common (3½"x0.162");	24" o.c. face nail
	10d box (3"x 0.128); or 3"x0.131" nails; or 3–3" 14 gage staples, 7/16" crown	16" o.c. face nail
9. Stud to stud and abutting studs at intersecting wall corners (at braced wall panels)	16d common (3½"x0.162");	16" o.c. face nail
	16d box (3½"x0.135"); or 3"x0.131" nails; or 3–3" 14 gage staples, 7/16" crown	12" o.c. face nail
10. Built–up header (2" to 2" header)	16d common (3½"x0.162")	16" o.c. ea. edge, face nail
	16d box (3½"x0.135")	12" o.c. ea. edge, face nail
11. Continuous header to stud	4–8d common (2½"x0.131"); or 4–10d box (3"x 0.128"); or 5–8d box (2½"x 0.113")	Toenail
12. Top plate to top plate	16d common (3½"x0.162");	16" o.c. face nail
	10d box (3"x 0.128); or 3"x0.131" nails; or 3" 14 gage staples, 7/16" crown	12" o.c. face nail
13. Top plate to top plate, at end joints	8–16d common (3½"x0.162"); or 12–16d box (3½"x 0.135"); or 12–10d box (3"x 0.128"); or 12–3"x0.131" nails; or 12–3" 14 gage staples, 7/16" crown	Each side of end joint, face nail (minimum 24" lap splice length each side of end joint)
14. Bottom plate to joist, rim joist, band joist or blocking (not at braced wall panels)	16d common (3½"x0.162");	16" o.c. face nail
	16d box (3½"x 0.135); or 3"x0.131" nails; or 3" 14 gage staples, 7/16" crown	12" o.c. face nail
15. Bottom plate to joist, rim joist, band joist or blocking at braced wall panels	2–16d common (3½"x0.162"); or 3–16d box (3½"x 0.135); or 4–3"x0.131" nails; or 4–3" 14 gage staples, 7/16" crown	16" o.c. face nail
16. Stud to top or bottom plate	3–16d box (3½"x 0.135"); or 4–8d common (2½"x0.131"); or 4–10d box (3"x 0.128"); or 4–3"x0.131" nails; or 4–8d box (2½"x 0.113"); or 4–3" 14 gage staples, 7/16" crown	Toenail
	2–16d common (3½"x 0.162"); or 3–16d box (3½"x 0.135"); or 3–10d box (3"x 0.128); or 3–3"x 0.131" nails; or 3–3" 14 gage staples, 7/16" crown	End nail
17. Top plates, laps at corners and intersections	2–16d common (3½"x0.162"); or 3–10d box (3"x 0.128); or 3–3"x0.131" nails; or 3–3" 14 gage staples, 7/16" crown	Face nail
18. 1" brace to each stud and plate	3–8d box (2½"x 0.113"); or 2–8d common (2½"x0.131"); or 2–10d box (3"x 0.128"); or 2–3"x0.131" nails; or 2–3" 14 gage staples, 7/16" crown	Face nail
19. 1"x6" sheathing to each bearing	3–8d box (2½"x 0.113"); or 2–8d common (2½"x0.131"); or 2–10d box (3"x 0.128"); or 2–19/4" 16 gage staples, 1" crown	Face nail
20. 1"x8" and wider sheathing to each bearing	3–8d common (2½"x0.131"); or 3–8d box (2½"x 0.113"); or 3–10d box (3"x 0.128"); or 3–19/4" 16 gage staples, 1" crown	Face nail
	Wider than 1"x 8" 3–8d common (2½"x0.131"); or 4–8d box (2½"x 0.113"); or 3–10d box (3"x 0.128"); or 3–19/4" 16 gage staples, 1" crown	

WOOD (Continued)

TABLE 2304.10.2
FASTENING SCHEDULE 2022 CBC

DESCRIPTION OF BUILDING ELEMENTS	NUMBER AND TYPE OF FASTENERS	SPACING AND LOCATION
Floor		
21. Joist to sill, top plate or girder	4–8d box (2½"x0.113")or 3–8d common (2½"x0.131"); or floor 3–10d box (3"x 0.128"); or 3–3"x0.131" nails; or 3–3" 14 gage staples, 7/16" crown	Toenail
22. Rim joist, band joist, or blocking to top plate, sill or other framing below	8d box (2½"x 0.113")	4" o.c., toenail
	8d common (2½"x0.131"); or 10d box (3"x 0.128"); or 3"x0.131" nails; or 3" 14 gage staples, 7/16" crown	6" o.c., toenail
23. 1"x6" subfloor or less to each joist	3–8d box (2½"x0.113")or 2–8d common (2½"x0.131"); or 3–10d box (3"x 0.128") 2–1½" 16 gage staples, 1" crown	Face nail
24. 2 subfloor to joist or girder	3–16d box (3½"x 0.135"); or 2–16d common (3½"x 0.162")	blind and Face nail
25. 2" planks (plank & beam – floor & roof)	3–16d box (3½"x 0.135"); or 2–16d common (3½"x 0.162")	Each bearing, face nail
26. Built–up girders and beams, 2" lumber layers	20d common (4"x 0.192")	32" o.c., face nail at top and bottom staggered on opposite sides
	10d box (3"x 0.128"); or 3"x0.131" nails; or 3" 14 gage staples, 7/16" crown	24" o.c., face nail at top and bottom staggered on opposite sides
	And: 2–20d common (4"x 0.192"); or 3–10d box (3"x 0.128"); or 3–3"x0.131" nails; or 3–3" 14 gage staples, 7/16" crown	Ends and at each splice, face nail
27. Ledger strip supporting joists or rafters	3–16d common (3½"x0.162"); or 4–16d box (3½"x 0.135"); or 4–10d box (3"x 0.128"); or 4–3"x0.131" nails; or 4–3" 14 gage staples, 7/16" crown	Each joist or rafter, face nail
28. Joist to band joist or rim joist	3–16d common (3½"x0.162"); or 4–10d box (3"x 0.128); or 4–3"x0.131" nails; or 4–3" 14 gage staples, 7/16" crown	End nail
29. Bridging or blocking to joist, rafter or truss	2–8d common (2½"x0.131"); or 2–10d box (3"x 0.128); or 2–3"x0.131" nails; or 2–3" 14 gage staples, 7/16" crown	Each end, toenail

DESCRIPTION OF BUILDING ELEMENTS	NUMBER AND TYPE OF FASTENERS	SPACING AND LOCATION	
Wood structural panels (WSP), subfloor, roof and interior wall sheathing to framing and particleboard wall sheathing to framing[d]			
		Edges (inches)	Intermediate supports (inches)
30. 3/8" – ½"	6d common or deformed (2"x0.113"); or 2⅜"x 0.113" nail (subfloor and wall)	6	12
	8d common or deformed (2½"x0.131"x 0.281" head) (roof) or RSRS–01 (2⅜"x0.113") nail (roof)[d]	6[e]	6[e]
	1¾" 16 gage staples, 7/16" crown (subfloor and wall)	4	8
	2⅜"x0.113"x 0.266" head nail (roof)	3[f]	3[f]
	1¾" 16 gage staples, 7/16" crown (roof)	3[f]	3[f]
31. 19/32" – ¾"	8d common (2½"x0.131"); or deformed (2"x0.113") (subfloor and wall)	6	12
	8d common or deformed (2½"x0.131"x 0.281" head) (roof) or RSRS–01 (2⅜"x0.113") nail (roof)[d]	6[e]	6[e]
	2⅜"x0.113"x 0.266" head nail; or 2" 16 gage staple, 7/16" crown	4	8
32. ⅞" – 1¼"	10d common (3"x0.148"); or 8d deformed (2½"x0.131"x 0.281" head)	6	12
Other exterior wall sheathing			
33. ½" fiberboard sheathing[b]	1½"x 0.120" galvanized roofing nail (7/16" head diameter); or 1¾" 16 gage staple with 7/16" or 1" crown	3	6
34. 25/32" fiberboard sheathing[b]	1¾"x 0.120" galvanized roofing nail (7/16" head diameter); or 1½" 16 gage staple with 7/16" or 1" crown	3	6
Wood structural panels, combination subfloor underlayment to framing			
35. ¾" and less	8d common (2½"x0.131"); or deformed (2½"x0.113"); or deformed (2"x0.120")	6	12
36. ⅞" – 1"	8d common (2½"x0.131"); or deformed (2½"x0.113"); or deformed (2"x0.120")	6	12
37. 1⅛" – 1¼"	10d common (3"x0.148"); or deformed (2½"x0.113"); or deformed (2"x0.120")	6	12
Panel siding to framing			
38. ½" or less	6d corrosion–resistant siding (1⅜"x0.106"); or 6d corrosion–resistant casing (2"x0.099")	6	12
39. ⅝"	8d corrosion–resistant siding (2⅜"x0.128"); or 8d corrosion–resistant casing (2½"x0.113")	6	12
Interior paneling			
40. ¼"	4d casing (1½"x0.080"); or 4d finish (1½"x0.072")	6	12
41. ⅜"	6d casing (2"x0.099"); or 6d finish (2"x 0.092") (Panel supports at 24 inches)	6	12

FOR SI: 1 INCH=25.4 mm.

a. Nails spaced at 6 inches at intermediate supports where spans are 48 inches or more. For nailing of wood structural panel and particleboard diaphragms and shear walls, refer to Section 2305. Nails for wall sheathing are permitted to be common, box or casing.
b. Spacing shall be 6 inches on center on the edges and 12 inches on center at intermediate supports for nonstructural applications. Panel supports at 16 inches (20 inches if strength axis in the long direction of the panel, unless otherwise marked).
c. Where a rafter is fastened to an adjacent parallel ceiling joist in accordance with this schedule and the ceiling joist is fastened to the top plate in accordance with this schedule, the number of toenails in the rafter shall be permitted to be reduced by one nail.
d. RSRS–01 is a Roof Sheathing Ring Shank nail meeting the specifications in ASTM F1667.

WOOD (Continued)

STRUCTURAL SHEATHING

1. Each panel shall be identified with the appropiate grade, stamp of the Rating Agency, and shall meet the requirements of the latest edition of the U.S. Product Standard PS–1.
2. Structural sheathing shall be of grade and thickness noted on the drawings. Use exterior grade adhesive for all plywood.
3. Structural sheathing at roofs shall be laid with face grain perpendicular to joists and rafters, unless otherwise noted. Stagger edges.
4. Structural sheathing on walls shall be laid with long dimensions vertical. Block all edges. Shearwalls more than one vertical panel in height shall have staggered spliced joints horizontally and blocked with same size member as wall studs.
5. The minimum edge distance for nails in the receiving members and plywood shall be 3/8" for 2x~ receiving members & 1/2" for 3x~ receiving members.
6. Minimum width of any structural sheathing piece applied shall be 24" for floors, ceilings and roofs; and 16" for shearwalls.

Open Web Wood Trusses

1. Open web trusses shall be designed and manufactured to the most current standards set forth in the National Evaluation Service, Inc Report No. NER–148 or ICBO Report No. PFC–4354.
2. Trusses shall be installed in accordance with manufacturer's recommendations.
3. Web member configurations shown are schematic only. Truss manufacturers to determine final web configuration.
4. Submit the following items for review by the architect and/or engineer of record prior to truss fabrication:
   a. Complete fabrication and erection drawings indicating location, spacing and bracing of all open web trusses.
   b. Design of trussed showing loading and stress diagrams, built–in cambers, and the calculations sealed by a professional engineer registered in California.
5. Minimum design loads: *

	ROOF	2ND FLOOR
Top chord dead load	15 psf	22psf
Top chord live load	20 psf	100 psf
Bottom chord dead load	9 psf	12 psf
Bottom chord live load	2 psf	
Wind load	110 mph	110 mph

6. All trusses shall be manufactured to limit deflection as follows:
   Floor T.L. L/360 L.L. L/480
   Roof T.L. L/240 L.L. L/360
7. See mechanical drawings for size, location and weight of air handling units to be located and supported within the trusses.

Parallel Strand Lumber (PSL) [Parallam]

1. Shall be manufactured from strands of wood fiber in a continuous process with all strands oriented to the length of the member. Strands shall be structurally bonded with waterproof adhesives conforming to the requirements of ASTM–2559. Members shall be marked ANSI / AITC Standard A 190.1. Resulting members shall meet the following allowable stress requirements:
   Fb = 2900 PSI
   Fv = 290 PSI
   Fcll = 2900 PSI
   E = 2.0 x 10 E6 PSI
2. All materials and assembles shall be covered in a currently approved I.C.B.O. or NES Report.
3. If P.S.L. members are stored prior to erection, materials shall be stored off the ground at a location protected from the weather.
4. Cutting, boring or notching of PSL members is not permitted without the approval of the Engineer or are specifically detailed on the construction drawings.

Laminated Veneer Lumber (LVL) [Microllam]

1. Shall be manufactured with graded wood veneers bonded with waterproof adhesives conforming to ASTM D–2559, and shall meet the following allowable stress requirements:
   Fb = 2600 PSI
   Fv = 285 PSI
   Fcll = 2510 PSI
   E = 1.9 x 10 E6 PSI
2. All materials and assemblies shall be covered by a currently approved I.C.B.O. or NES Report.
3. If LVL members are stored prior to erection, materials shall be stored off the ground at a location protected from the weather.
4. Cutting, boring or notching of LVL members is not permitted without the approval of the Engineer or are specifically shown on the construction drawings.

Solid Web "I" Joist

1. Solid web "I" joists shall be preapproved for the indicated use by an I.C.B.O or NER current report.
2. The joists shall be manufactured with solid wood or laminated wood flanges and plywood complying with PS01–83 or APA rated oriented strand board webs. Webs and flanges shall be assembled with moisture resistant construction adhesive.
3. The "I" joist shall be installed in accordance with manufacturers recommendations.

REVISIONS	BY

REGISTERED PROFESSIONAL ENGINEER GLEN JOHNSON No. C 56027 Exp. 6/30/2026 CIVIL STATE OF CALIFORNIA

CCE
STRUCTURAL DESIGN
CENTRAL COAST ENGINEERS, INC.
P.O. Box 2503
SALINAS, CA 93902
P 831.757.5534
F 831.757.2226

PROJECT TITLE:
OUR LADY OF ASSUMPTION CHURCH
100 SALINAS ROAD, PAJARO, CA 95076
APN # 117–323–011–000

SHEET TITLE:
STRUCTURAL NOTES

JOB No.	CCE–23–089
DATE:	10/31/2024
SCALE:	AS NOTED
DRAWN BY:	O.R.
SHEET No.:	S0.1
# OF SHEETS	

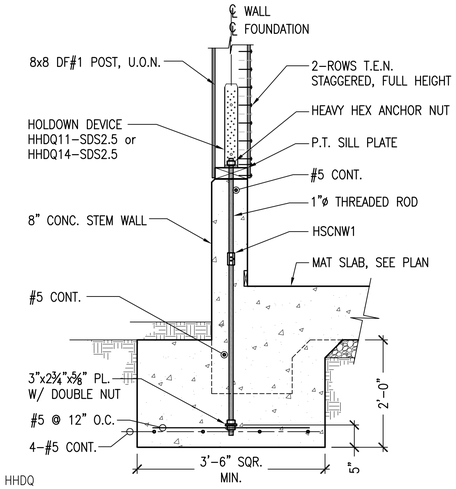

HOLDOWN DETAIL

NT.S. | 11

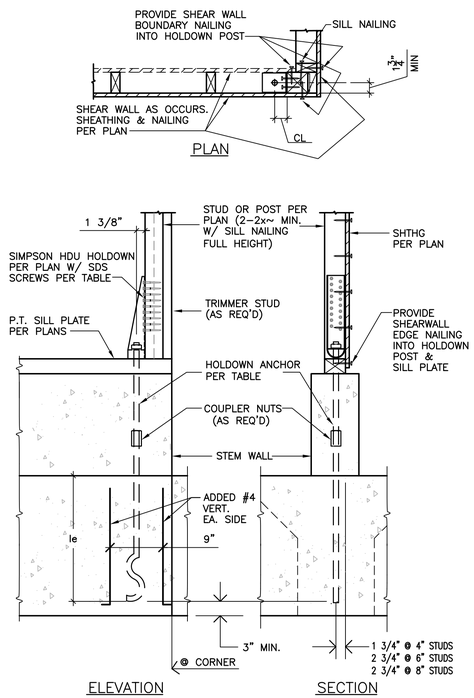

SIMPSON MODEL NO.	FASTENERS				MIN. POST
	HOLDOWN ANCHOR DIA	NO. OF SDS WOOD SCREWS	ANCHOR TYPE (NOTES 1&2)	EMBEDMENT le	
DTT2Z	1/2	8	PAB4-18	12"	1-2X~
HDU2	5/8	6	SSTB16	12-5/8"	2-2X~
HDU4	5/8	10	SSTB20	16-5/8"	2-2X~
HDU5	5/8	14	SSTB24	20-5/8"	4X~
HDU8	7/8	20	SSTB28	24-7/8"	4X~
HDQ8	7/8	20	SSTB28	24-7/8"	3-2X~

NOTES:

1.) ANCHOR TYPE & EMBEDMENT LENGTH FOR MONO POUR ONLY. SEE MANUFACTURER SPECIFICATIONS FOR TWO POUR TYPE FOUNDATIONS.

2.) AT 3x~ SILL PLATE: USE SSTBL MODELS (ex. SSTB24L) FOR LONGER THREAD LENGTH.

3.) FOUNDATION REINFORCEMENT NOT SHOWN FOR CLARITY.

HF1

HOLDOWN DETAIL

NT.S. | 8

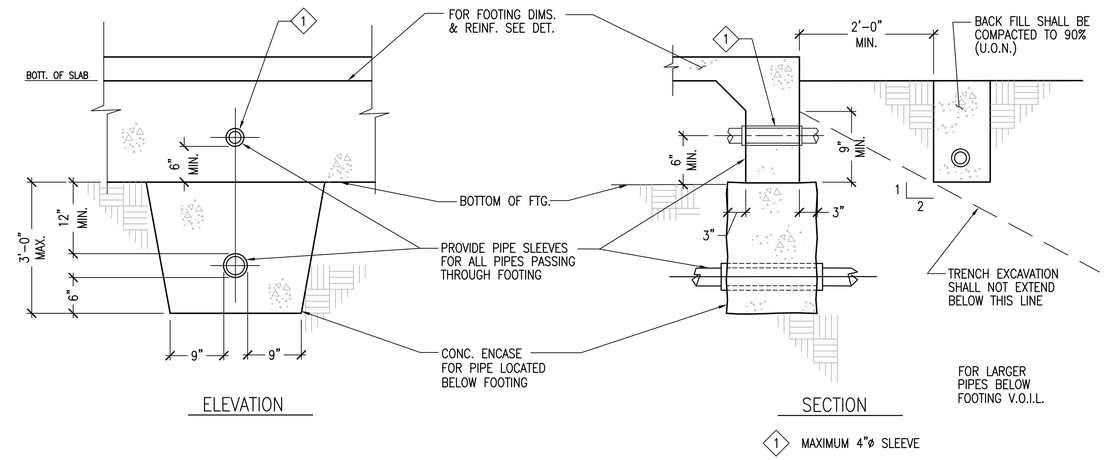

PIPES & TRENCHES AT FOOTING

NT.S. | 1

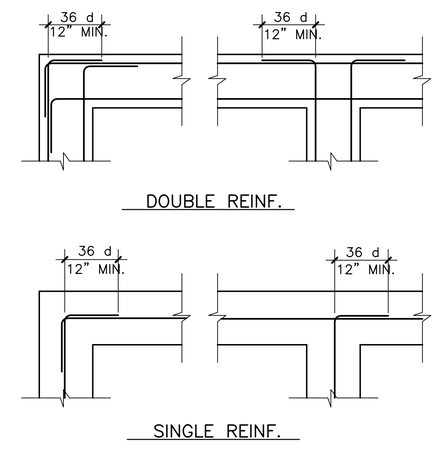

T1201A SC: 1"=1'

REBAR LAPING AT INTERSECTION

NT.S. | 5

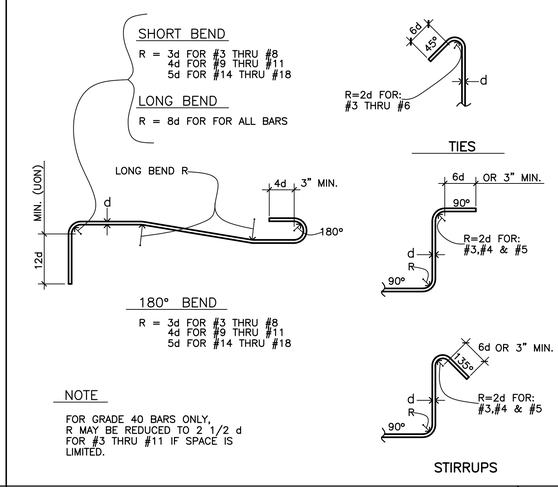

NOTE

FOR GRADE 40 BARS ONLY, R MAY BE REDUCED TO 2 1/2 d FOR #3 THRU #11 IF SPACE IS LIMITED.

TYP. REBAR BENDING

NT.S. | 2

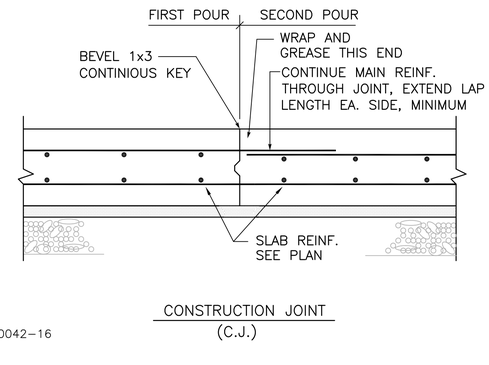

CM00042-16

CONSTRUCTION JOINT IN FOOTING

NT.S. | 6

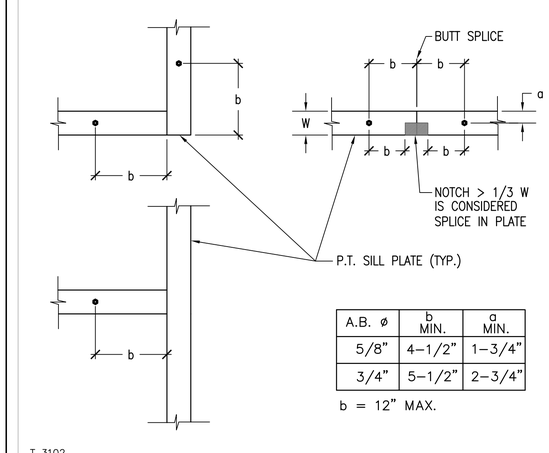

A.B. ø	b MIN.	a MIN.
5/8"	4-1/2"	1-3/4"
3/4"	5-1/2"	2-3/4"

b = 12" MAX.

T 3102

TYP. ANCHOR BOLT DETAIL

NT.S. | 3

DETAIL

NT.S. | 12

DETAIL

NT.S. | 9

REVISIONS	BY

REGISTERED PROFESSIONAL ENGINEER GLEN JOHNSON No. C 66027 Exp. 6/30/2026 CIVIL STATE OF CALIFORNIA

CCE
STRUCTURAL DESIGN
CENTRAL COAST ENGINEERS, INC.
P.O. BOX 2503
SALINAS, CA 93902
P 831.757.5534
F 831.757.2226

PROJECT TITLE:

OUR LADY OF ASSUMPTION CHURCH

100 SALINAS ROAD, PAJARO, CA 95076
APN # 117-323-011-000

SHEET TITLE:

TYPICAL DETAILS

JOB No.	CCE-23-089
DATE:	10/31/2024
SCALE:	AS NOTED
DRAWN BY:	O.R.
SHEET No.:	S1.1
# OF SHEETS	

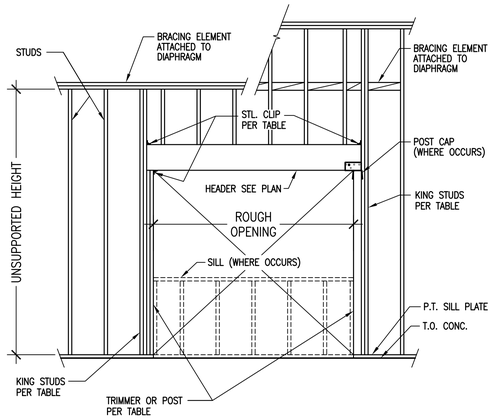

T4312R

T4311.DWG

NUMBER OF KING STUDS @ OPENINGS

	ROUGH OPENING:	4 . 0'		6 . 0'		8 . 0'		10 . 0'		12 . 0'		14 . 0'		16 . 0'	
	UNSUPPORTED STUD HT.	Ext.	Int.	Ext.	Int.	Ext.	Int.	Ext.	Int.	Ext.	Int.	Ext.	Int.	Ext.	Int.
2 X 4	8'	1	1	2	1	2	1	2	2	3	2	4	2	4	3
	10'	2	1	2	1	3	2	4	2	4	2	—	2	—	3
	12'	2	1	4	2	—	2	—	2	—	3	—	3	—	3
	14'	—	2	—	2	—	2	—	2	—	3	—	3	—	3
2 X 6	8'	1	1	2	1	2	1	2	1	2	2	3	2	3	3
	10'	1	1	2	1	2	1	2	1	3	2	3	2	4	3
	12'	2	1	2	1	2	1	2	2	3	2	4	2	4	3
	14'	2	1	2	1	2	2	3	2	3	2	4	3	4	3
	16'	2	1	3	2	3	2	4	2	4	3	—	3	—	4
	18'	2	2	3	2	4	2	—	2	—	3	—	3	—	4
	20'	3	2	4	2	—	2	—	2	—	—	—	—	—	—
	22'	—	2	—	2	—	2	—	2	—	—	—	—	—	—

E = EXTERIOR WALL
I = INTERIOR WALL
– = SEE PLAN FOR POST SIZE

U.S.H. = UNSUPPORTED STUD HEIGHT

BEARING WALL TRIMMER/POST SCHEDULE, U.O.N.

ROUGH OPENING	2X6		2X4		COMMENTS
	TRIMMER	POST	TRIMMER	POST	
6'–0"	1–2x6	–	1–2x4	–	
8'–0"	2–2x6	–	2–2x4	–	
10'–0"	–	4x6	–	4x4	EPC POST CAP, U.O.N.

NOTE:
1. SEE FRAMING PLANS FOR BEARING WALL HEADER & POST SIZES.
2. USE A34 CLIP ON TOP & BOTTOM OF HEADER WITHOUT POST
3. USE A34 CLIP ON TOP OF HEADER & POST CAP WITH POST

NON–BEARING HEADER / TRIMMER SCHEDULE

ROUGH OPENING	2X6		2X4		COMMENTS
	HEADER	TRIMMER	HEADER	TRIMMER	
4'–0"	6X6	1–2x6	4X6	1–2x4	
6'–0"	6X8	1–2x6	4X8	1–2x4	
8'–0"	6X10	2–2x6	4X10	2–2x4	
10'–0"	6X12	2–2x6	4X12	2–2x4	

NOTE:
SEE ROOF FRAMING PLAN FOR BEARING WALL HEADER SIZES.

FRAME OPEN'G ELEV. & SCHED N.T.S. 12

SHEAR WALL SCHEDULE

X Y.Y.

(TABLE 4.3A SDPWS–2021, ASD allowable unit shear capacity)

X	DIAPHRAGM DESCRIPTION	SIDES	NAILING (T.E.N.)	VALUE (P.LF)	BLOCK TO PLATE	SILL NAILING	ANCHOR BOLT SPACING @ PT SLAB	NOTES
1	15/32" RATED SHEATHING	1	10d @ 6" O.C.	300	LTP4 @ 16" O.C. A35 @ 16" O.C.	16d @ 6" O.C.	5/8"ø @ 48" O.C.	1,2,3,4
2	15/32" RATED SHEATHING	1	10d @ 4" O.C.	450	LTP4 @ 12" O.C. A35 @ 12" O.C.	16d @ 4" O.C.	5/8"ø @ 32" O.C.	1,2,3,4
3	15/32" STRUCTURAL I SHEATHING	1	10d @ 3" O.C. STAGGERED	660	LTP4 @ 9" O.C A35 @ 9" O.C	16d @ 3" O.C.	5/8"ø @ 24" O.C.	1,2,3,6,7,8
4	15/32" STRUCTURAL I SHEATHING	1	10d @ 2" O.C. STAGGERED	870	LTP4 @ 6" O.C A35 @ 6" O.C	16d @ 4" O.C. (2 ROWS STAGG.)	5/8"ø @ 16" O.C.	1,2,3,6,7,8
5	15/32" STRUCTURAL I SHEATHING	2	10d @ 4" O.C. STAGGERED	1020	LTP4 @ 12" O.C EA. FACE	16d @ 3 1/2" O.C. (2 ROWS STAGG.)	7/8"ø @ 32" O.C.	1,2,3,5,6,7,8
6	15/32" STRUCTURAL I SHEATHING	2	10d @ 3" O.C. STAGGERED	1300	LTP4 @ 9" O.C EA. FACE	16d @ 3" O.C. (2 ROWS STAGG.)	7/8"ø @ 24" O.C.	1,2,3,5,6,7,8
7	15/32" STRUCTURAL I SHEATHING	2	10d @ 2" O.C. STAGGERED	1740	LTP4 @ 6" O.C EA. FACE		7/8"ø @ 16" O.C.	1,2,3,5,6,7,8

X = INDICATES SHEAR WALL TYPE
X Y.Y. Y.Y. = INDICATES LENGTH OF SHEAR WALL IN FEET

2021cbc 8d Schedule

NOTES

1.– SHEAR WALLS OCCUR BELOW THE FRAMING PLAN ON WHICH SHOWN.
2.– NAIL SHEATHING AT 12" O.C. AT ALL INTERMEDIATE SUPPORTS (T.F.N.).
3.– BLOCK ALL PANEL EDGES WITH BLOCKING OF THE SAME WIDTH AS WALL STUDS.
4.– USE A 2x~ MUD SILL PLATE.
5.– STAGGER PLYWOOD EDGES EACH FACE OR USE 3x~ STUD @ PANEL EDGES.
6.– ALL FRAMING MEMBERS RECIEVING E.N. FROM ABUTTING PANELS SHALL BE 3x~ OR USE 2–2x~ STITCH NAILED TOGETHER PER 16d SILL NAILING, AS SHOWN ABOVE. NAILS AT PANEL EDGES SHALL BE STAGGERED.
7.– USE 3x BLOCKING BELOW SHEARWALL.
8.– USE 3x~ MUD SILL PLATE.

SHEAR WALL SCHEDULE 1

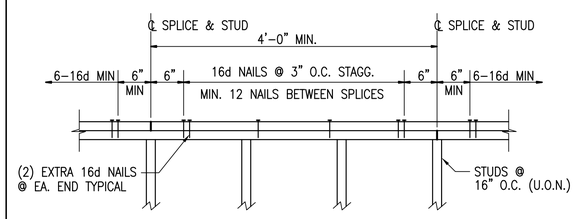

T4204A

TYP. TOP PLATE SPLICE N.T.S. 8

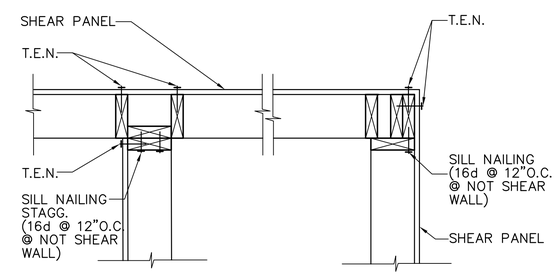

T4101

SHEAR WALL NAILING N.T.S. 5

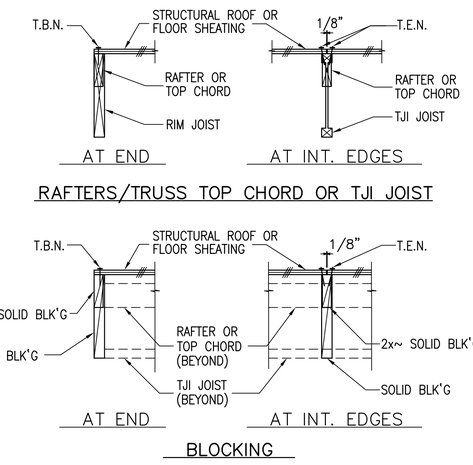

T 4201

HORIZ. DIAPH NAILING N.T.S. 2

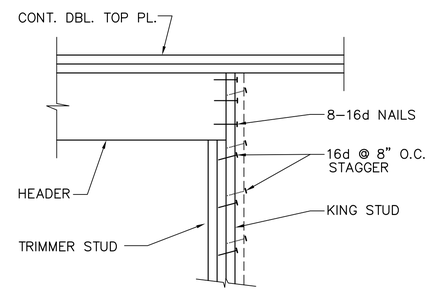

NOTE :
USE DOUBLE KING STUD AT OPENINGS GREATER THAN 6'–0"

Header

TYP. HEADER N.T.S. 6

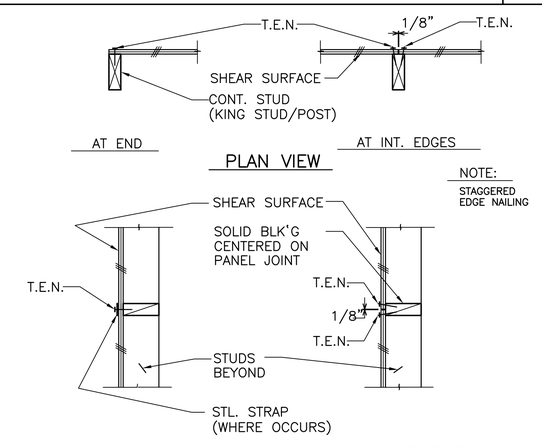

T 4201A

VERT. DIAPH NAILING (T.E.N.) N.T.S. 3

DETAIL N.T.S. 9

REVISIONS	BY

REGISTERED PROFESSIONAL ENGINEER GLEN JOHNSON No. C 66027 Exp. 6/30/2026 CIVIL STATE OF CALIFORNIA

CCE
CENTRAL COAST ENGINEERS, INC.
STRUCTURAL DESIGN
P.O. BOX 2503
SALINAS, CA 93902
P 831.757.5534
F 831.757.2226

PROJECT TITLE:
OUR LADY OF ASSUMPTION CHURCH
100 SALINAS ROAD, PAJARO, CA 95076
APN # 117–323–011–000

SHEET TITLE:
TYPICAL DETAILS

JOB No.	CCE–23–089
DATE:	10/31/2024
SCALE:	AS NOTED
DRAWN BY:	O.R.
SHEET No.:	S1.2
# OF SHEETS	

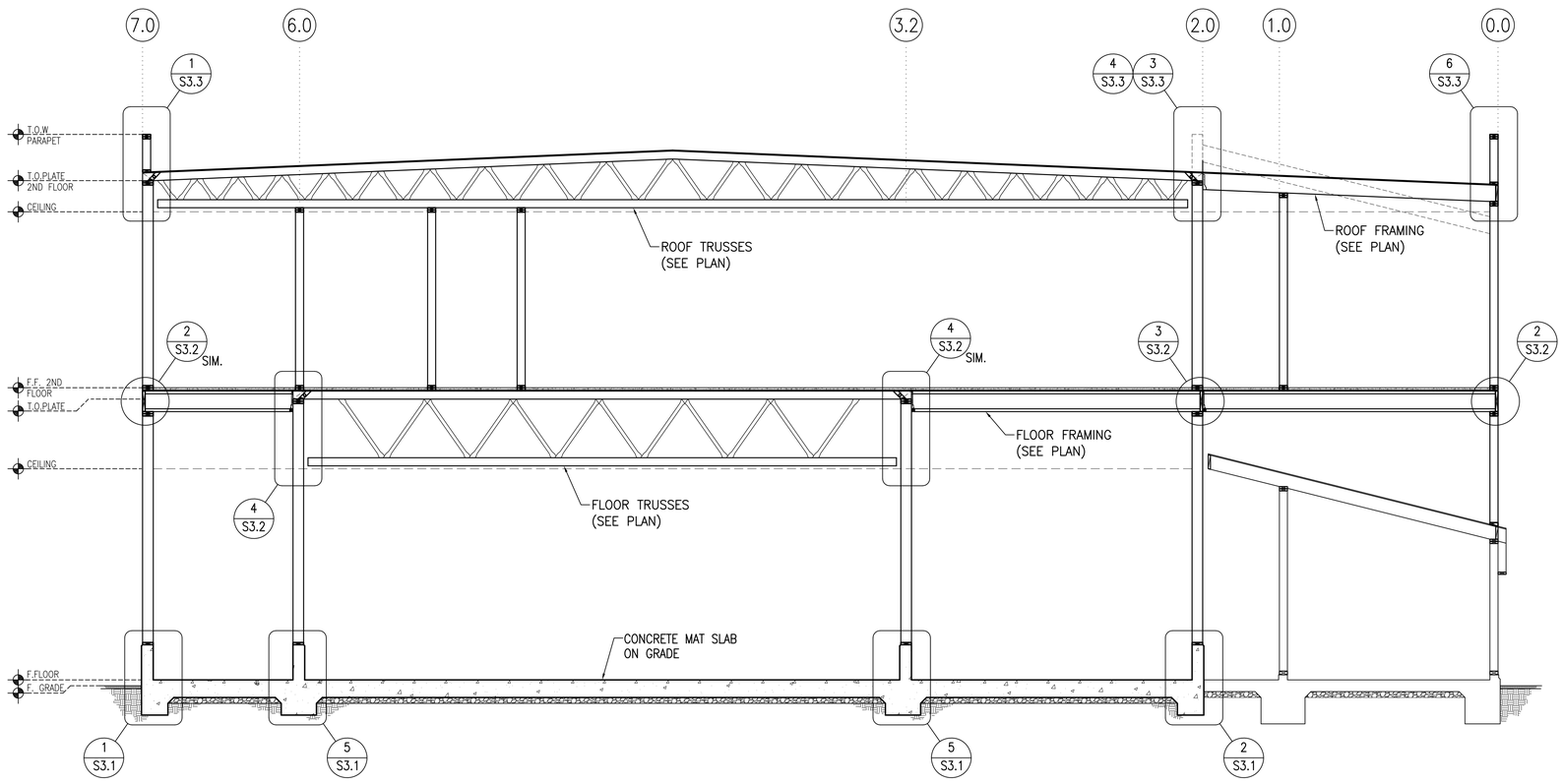

1 BUILDING SECTION

SC: 1/4"=1'-0"

REVISIONS	BY

REGISTERED PROFESSIONAL ENGINEER DEAN GLEN JOHNSON No. C 66027 CIVIL EXP. 6/30/2026 STATE OF CALIFORNIA

CCE STRUCTURAL DESIGN
P.O. BOX 2503
SALINAS, CA 93902
P 831.757.5554
F 831.757.2226
CENTRAL COAST ENGINEERS, INC.

PROJECT TITLE:

OUR LADY OF ASSUMPTION CHURCH

100 SALINAS ROAD, PAJARO, CA 95076
APN # 117-323-011-000

SHEET TITLE: BUILDING SECTION

JOB No.	CCE-23-089
DATE:	10/31/2024
SCALE:	AS NOTED
DRAWN BY:	O.R.
SHEET No.:	S2.0
# OF SHEETS	

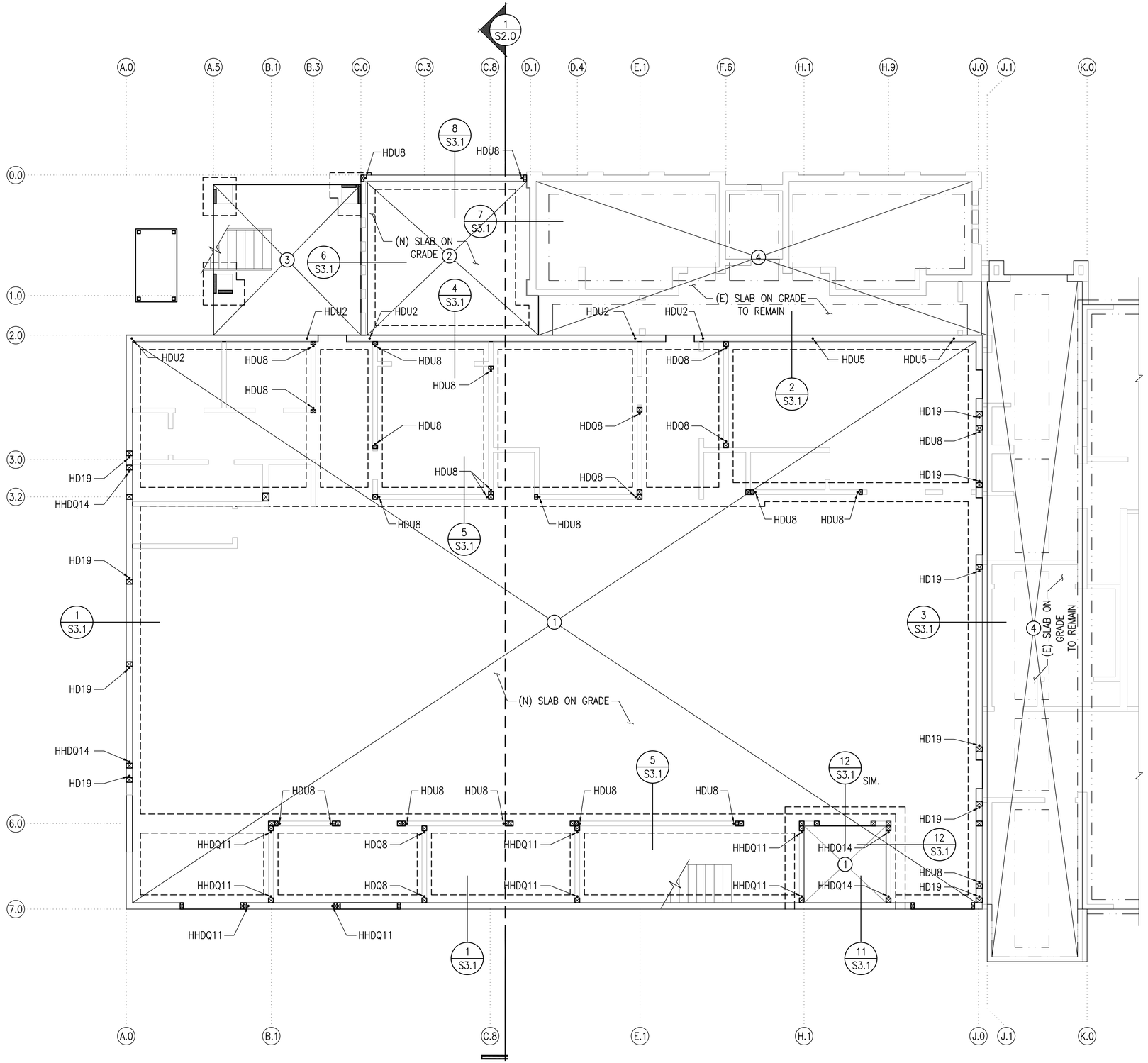

FOUNDATION PLAN

SC: 3/16"=1'-0"

SHEET NOTES

GENERAL

1. SEE SHEETS S0.0 & S0.1 FOR STRUCTURAL NOTES.
2. SEE SHEET S1.1 FOR TYPICAL DETAILS.
3. SEE SHEETS S3.1 FOR STRUCTURAL DETAILS.

FOUNDATION NOTES:

1. FOR ADDITIONAL FOUNDATION AND MATERIAL REQUIREMENTS SEE FOUNDATION NOTES, CONCRETE NOTES & WOOD NOTES ON SHEET S0.0 & S0.1
2. THE FASTENERS EMBEDDED IN CONCRETE OR MASONRY SHALL BE ATTACHED TO, OR HOOKED AROUND, REINFORCING STEEL OR OTHERWISE TERMINATED TO EFFECTIVELY TRANSFER FORCES TO THE REINFORCING STEEL.
3. HOLDOWN DEVICES MUST BE SECURED IN PLACE PRIOR TO FOUNDATION INSPECTION
4. FASTENERS IN P.T. WOOD SHALL BE HOT-DIPPED GALVANIZED

SLAB ON GRADE

(1) 12" CONC. MAT SLAB ON GRADE W/ #5 @ 16" O.C. EA. WAY/ TOP & BOTTOM OVER A 15 MIL WATER-PROOF MEMBRANE OVER 4" DRAIN ROCK. SEE GEOTECHNICAL REPORT FOR ADDITIONAL INFORMATION.

(2) 8" CONC. MAT SLAB ON GRADE W/ #4 @ 12" O.C. EA. WAY/ TOP & BOTTOM OVER A 15 MIL WATER-PROOF MEMBRANE OVER 4" DRAIN ROCK. SEE GEOTECHNICAL REPORT FOR ADDITIONAL INFORMATION.

(3) 7½" CONC. MAT SLAB ON GRADE W/ #4 @ 12" O.C. EA. WAY/ TOP & BOTTOM OVER A 15 MIL WATER-PROOF MEMBRANE OVER 4" DRAIN ROCK. SEE GEOTECHNICAL REPORT FOR ADDITIONAL INFORMATION.

(4) (E) MAT SLAB

LEGEND

- INDICATES EXISTING FOUNDATION
- INDICATES CONC. FOUNDATION
- INDICATES CONC. STEM WALL
- INDICATES WALL ABOVE
- INDICATES POST ABOVE
- INDICATES HOLDOWN ANCHOR & LOCATION SEE DETAILS 8 & 11 ON SHEET S1.1

REVISIONS	BY

REGISTERED PROFESSIONAL ENGINEER GLEN JOHNSON No. C 66027 Exp. 6/30/2026 CIVIL STATE OF CALIFORNIA

CCE
CENTRAL COAST ENGINEERS, INC.
STRUCTURAL DESIGN
P.O. BOX 2503
SALINAS, CA 93902
P 831.757.5554
F 831.757.2226

PROJECT TITLE:

OUR LADY OF ASSUMPTION CHURCH

100 SALINAS ROAD, PAJARO, CA 95076
APN # 117-323-011-000

SHEET TITLE: FOUNDATION PLAN

JOB No.	CCE-23-089
DATE:	10/31/2024
SCALE:	AS NOTED
DRAWN BY:	O.R.

SHEET No.: S2.1

OF SHEETS

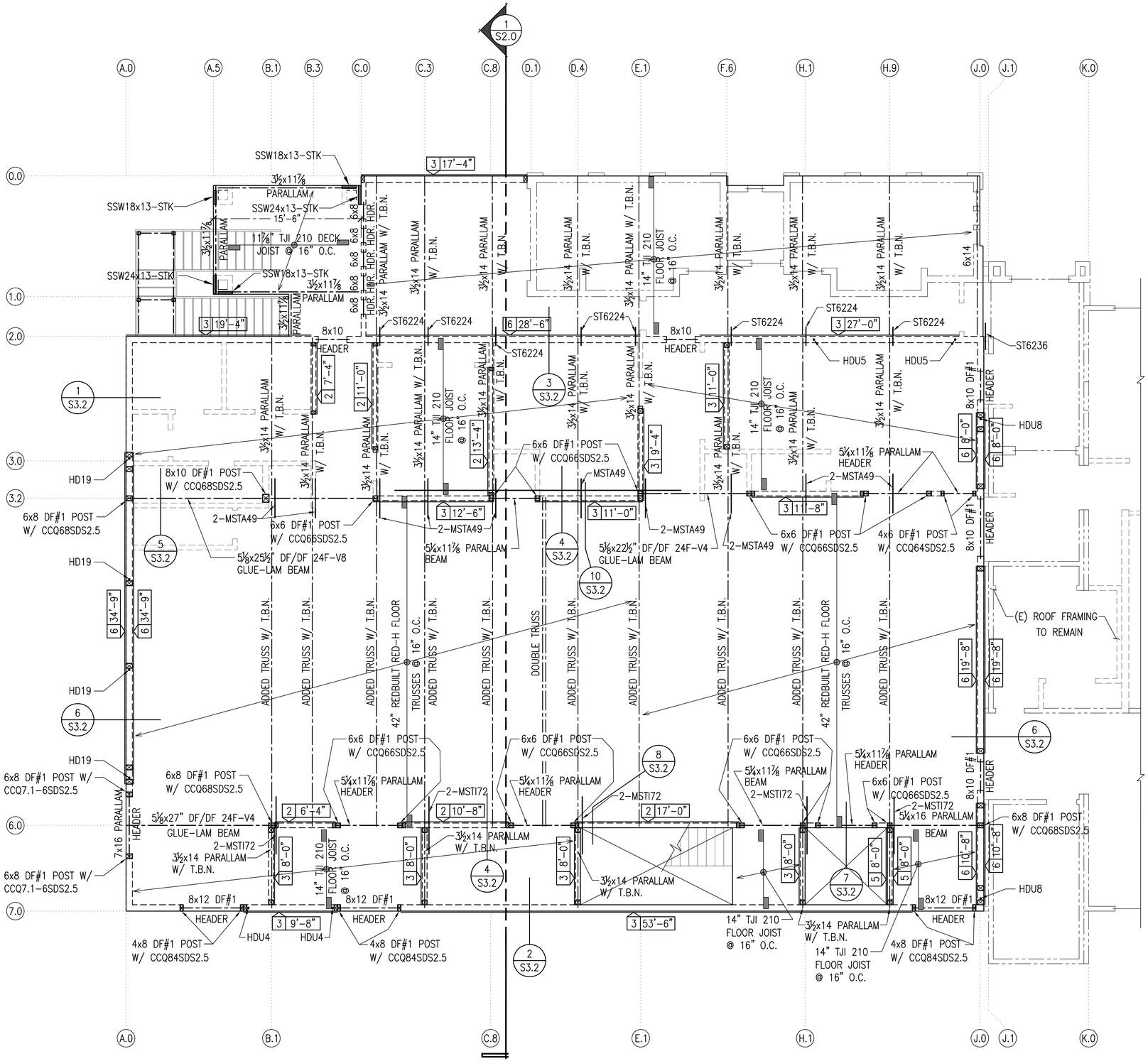

SECOND FLOOR FRAMING PLAN

SC: 3/16"=1'-0"

SHEET NOTES

GENERAL

1. SEE SHEETS S0.0 & S0.1 FOR STRUCTURAL NOTES.
2. SEE SHEETS S1.1 & S1.2 FOR TYPICAL DETAILS.
3. SEE SHEET S3.2 FOR SECOND FLOOR FRAMING DETAILS.

WALL FRAMING

FRAMING:
USE FULL HEIGHT STUDS @ 16" O.C., U.O.N.

WALL SHEATHING:
USE 15/32" RATED SHEATHING WITH SOLID BLOCKING @ ALL EDGE PANELS.
(FOR NAILING, SEE SHEAR WALL SCHEDULE-SHEET S1.2)

MAIN FLOOR FRAMING

1. (N) 42" REDBUILT RED-H FLOOR TRUSSES @ 16" O.C.
2. (N) 14 TJI 210 FLOOR JOIST @ 16" O.C.
3. (N) 11⅞ TJI 210 DECK JOIST @ 16" O.C.

FLOOR SHEATHING:
USE 23/32" RATED SHEATHING W/
10d @ 6" O.C. T.B.N.
10d @ 6" O.C. T.E.N.
& 10d @ 12" O.C. F.N.

DECK SHEATHING:
USE 23/32" EXTERIOR GRADE PLYWOOD W/
10d @ 6" O.C. T.E.N. &
10d @ 12" O.C. F.N.

LEGEND

- INDICATES STRUCTURAL WALL BELOW
- INDICATES NON STRUCTURAL WALL BELOW
- INDICATES EXTENT OF REPETITIVE MEMBERS
- INDICATES REPETITIVE FRAMING DIRECTION
- X X'-X" INDICATES SHEARWALL TYPE & LENGTH SEE SCHEDULE ON SHEET S1.2.
- • INDICATES HOLDOWN BETWEEN FLOORS SEE DETAIL 9 ON SHEET S3.3

REVISIONS	BY

REGISTERED PROFESSIONAL ENGINEER GLEN JOHNSON No. C 66027 Exp. 6/30/2026 CIVIL STATE OF CALIFORNIA

CCE
STRUCTURAL DESIGN
CENTRAL COAST ENGINEERS, INC.
P.O. Box 2503
SALINAS, CA 93902
P 831.757.5534
F 831.757.2226

PROJECT TITLE:
OUR LADY OF ASSUMPTION CHURCH
100 SALINAS ROAD, PAJARO, CA 95076
APN # 117-323-011-000

SHEET TITLE:
SECOND FLOOR FRAMING

JOB No.	CCE-23-089
DATE:	10/31/2024
SCALE:	AS NOTED
DRAWN BY:	O.R.
SHEET No.:	S2.2
# OF SHEETS	

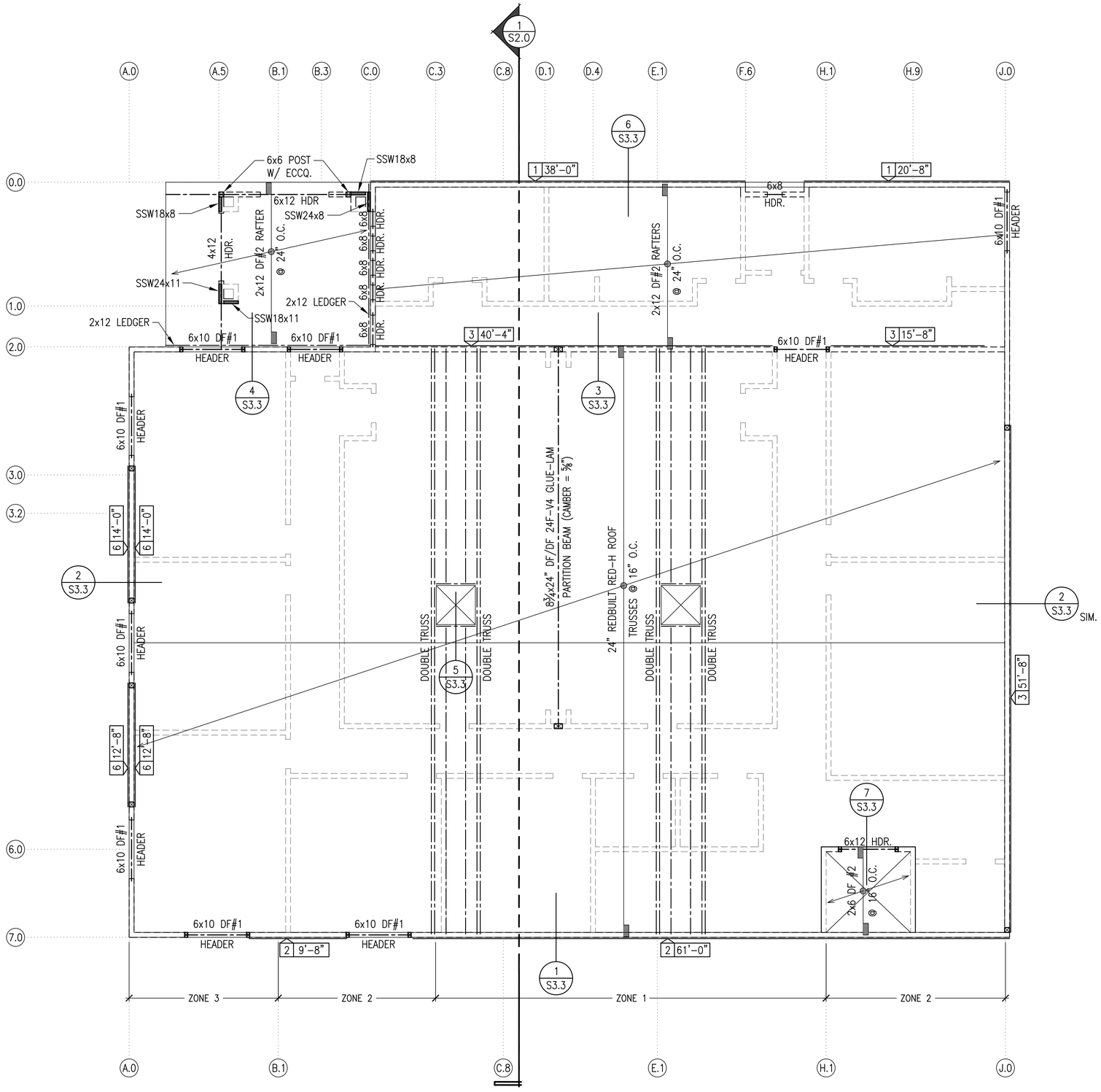

ROOF FRAMING PLAN

SC: 3/16"=1'-0"

SHEET NOTES

GENERAL

1. SEE SHEETS S0.0 & S0.1 FOR STRUCTURAL NOTES.
2. SEE SHEETS S1.1 & S1.2 FOR TYPICAL DETAILS.
3. SEE SHEET S3.3 FOR ROOF FRAMING DETAILS.

WALL FRAMING

FRAMING:
USE FULL HEIGHT STUDS @ 16" O.C., U.O.N.

WALL SHEATHING:
USE 15/32" RATED SHEATHING WITH SOLID BLOCKING @ ALL EDGE PANELS.
(FOR NAILING, SEE SHEAR WALL SCHEDULE-SHEET S1.2)

ROOF FRAMING

1. (N) 24" REDBUILT RED-H ROOF TRUSSES @ 16" O.C.
2. (N) 2x12 DF#2 RAFTERS @ 24" O.C.

ZONE 1 ROOF SHEATHING:
USE 19/32" RATED SHEATHING W/
10d @ 6" O.C. T.B.N.
10d @ 6" O.C. T.E.N.
& 10d @ 12" O.C. F.N.

ZONE 2 ROOF SHEATHING:
USE 19/32" RATED SHEATHING W/
10d @ 4" O.C. T.B.N.
10d @ 6" O.C. T.E.N.
& 10d @ 12" O.C. F.N.

ZONE 3 ROOF SHEATHING:
USE 19/32" RATED SHEATHING W/
10d @ 2½" O.C. T.B.N.
10d @ 6" O.C. T.E.N.
& 10d @ 12" O.C. F.N.

LEGEND

- INDICATES STRUCTURAL WALL BELOW
- INDICATES NON STRUCTURAL WALL BELOW
- INDICATES EXTENT OF REPETITIVE MEMBERS
- INDICATES REPETITIVE FRAMING DIRECTION
- X X'-X" INDICATES SHEARWALL TYPE & LENGTH SEE SCHEDULE ON SHEET S1.2.

REVISIONS	BY

REGISTERED PROFESSIONAL ENGINEER GLEN JOHNSON No. C 56027 Exp. 6/30/2026 CIVIL STATE OF CALIFORNIA

CCE
CENTRAL COAST ENGINEERS, INC.
STRUCTURAL DESIGN
P.O. Box 2503
SALINAS, CA 93902
P 831.757.5534
F 831.757.2226

PROJECT TITLE:
OUR LADY OF ASSUMPTION CHURCH
100 SALINAS ROAD, PAJARO, CA 95076
APN # 117-323-011-000

SHEET TITLE:
ROOF FRAMING PLAN

JOB No.	CCE-23-089
DATE:	10/31/2024
SCALE:	AS NOTED
DRAWN BY:	O.R.
SHEET No.:	S2.3
# OF SHEETS	

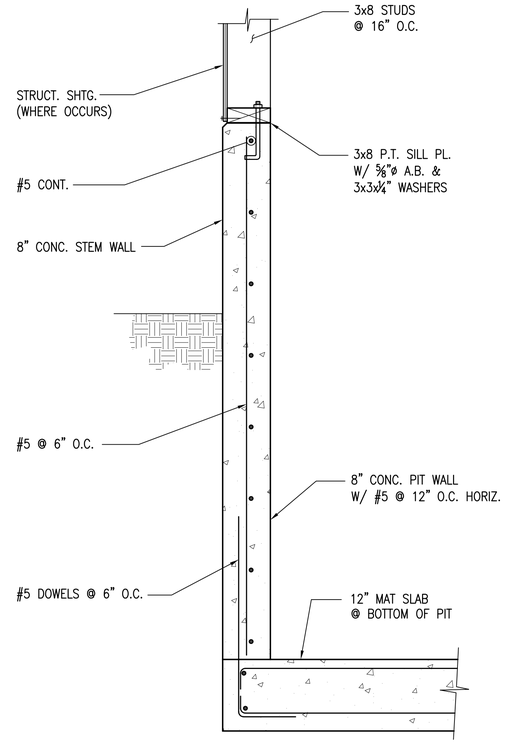

CCE-21-018-03

DETAIL SC: 1"=1'-0" 11

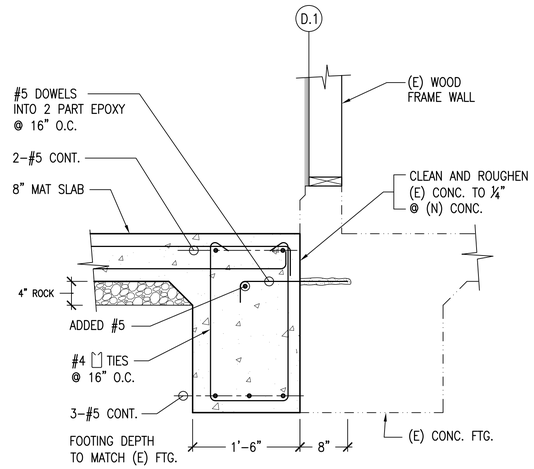

DETAIL SC: 1"=1'-0" 7

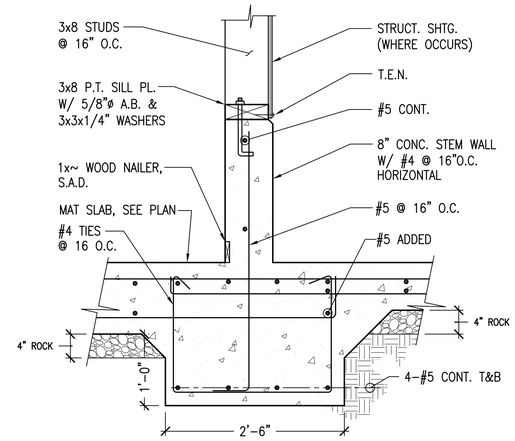

CCE-021-018-13

DETAIL SC: 1"=1'-0" 4

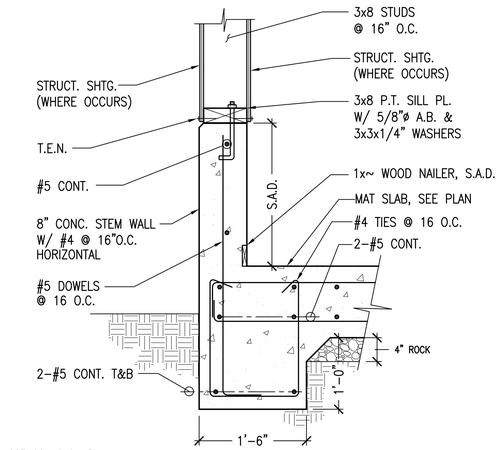

CCE-021-018-13

SC: 1"=1'-0" 1

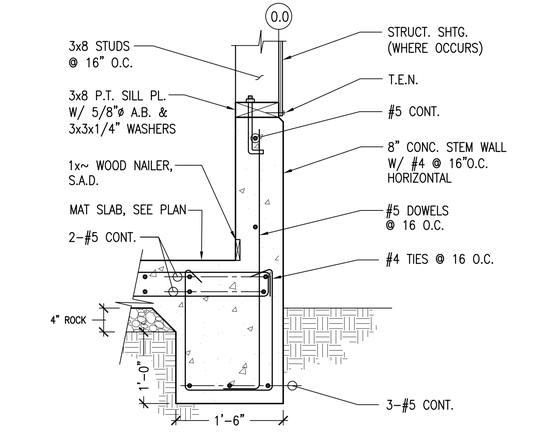

CCE-021-018-13

DETAIL SC: 3/4"=1'-0" 8

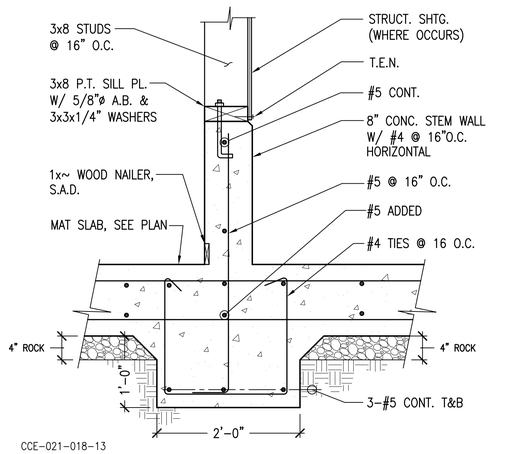

CCE-021-018-13

DETAIL SC: 1"=1'-0" 5

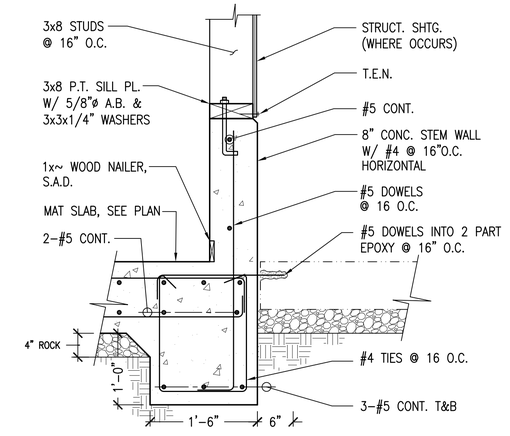

CCE-021-018-13

DETAIL SC: 1"=1'-0" 2

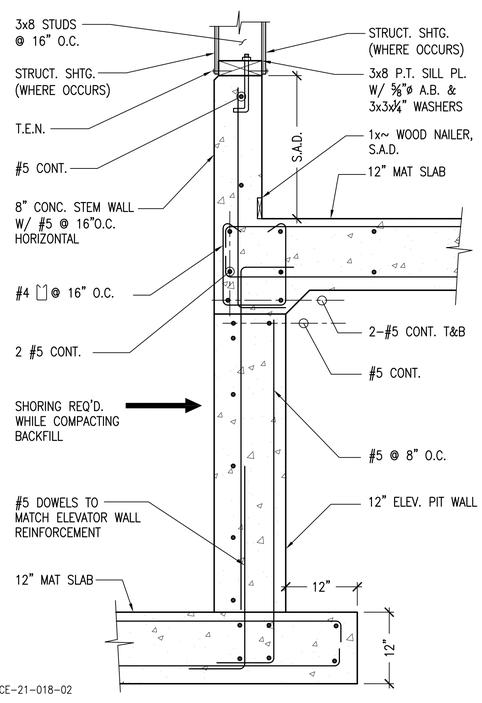

CCE-21-018-02

DETAIL SC: 1"=1'-0" 12

DETAIL SC: 1"=1'-0" 9

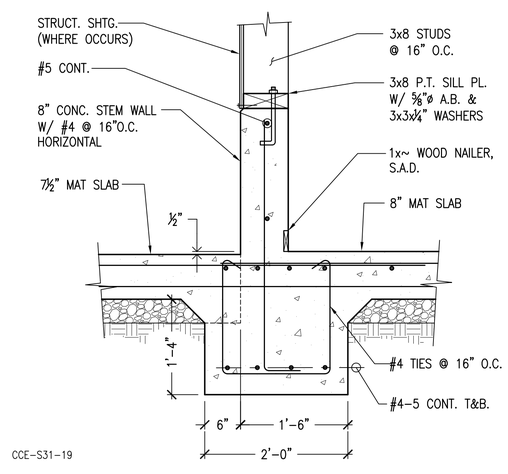

CCE-S31-19

DETAIL SC: 1"=1'-0" 6

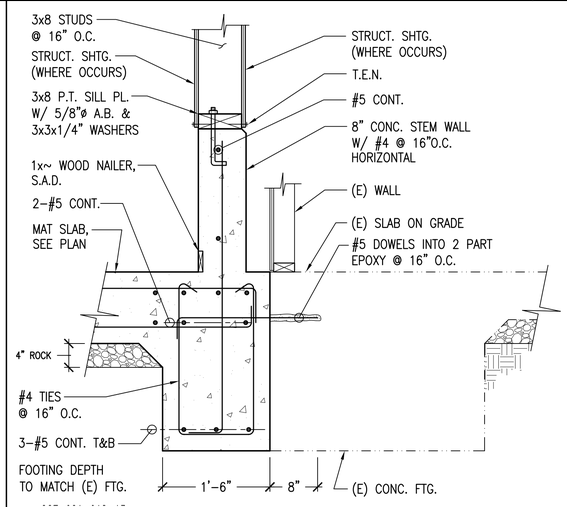

DETAIL SC: 1"=1'-0" 3

REVISIONS	BY

REGISTERED PROFESSIONAL ENGINEER GLEN JOHNSON No. C 56027 Exp. 6/30/2026 CIVIL STATE OF CALIFORNIA

CCE
STRUCTURAL DESIGN
P.O. BOX 2503
SALINAS, CA 93902
P 831.757.5534
F 831.757.2226
CENTRAL COAST ENGINEERS, INC.

PROJECT TITLE:

OUR LADY OF ASSUMPTION CHURCH

100 SALINAS ROAD, PAJARO, CA 95076
APN # 117-323-011-000

SHEET TITLE:

FOUNDATION DETAILS

JOB No.	CCE-23-089
DATE:	10/31/2024
SCALE:	AS NOTED
DRAWN BY:	O.R.
SHEET No.:	S3.1
# OF SHEETS	

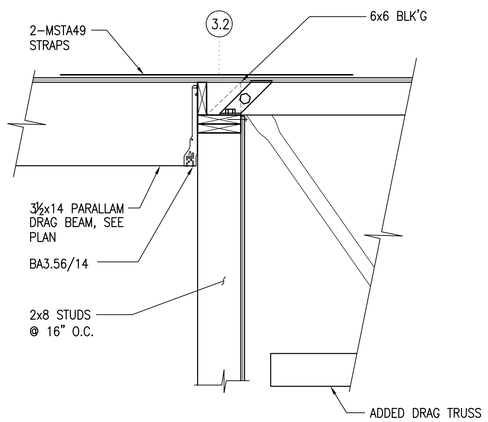

CCE-023-089-10

DETAIL SC: 1"=1'-0" 10

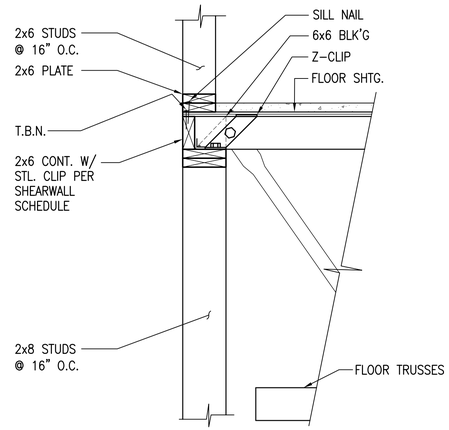

CCE-021-018-27

DETAIL SC: 1"=1'-0" 7

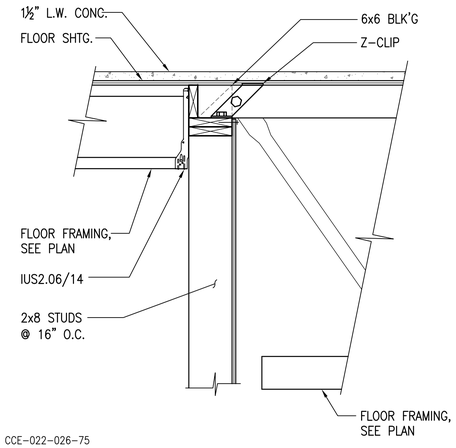

CCE-022-026-75

DETAIL SC: 1"=1'-0" 4

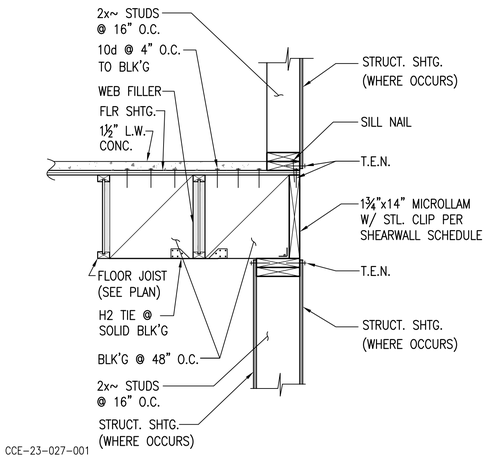

CCE-23-027-001

SC: 1"=1'-0" 1

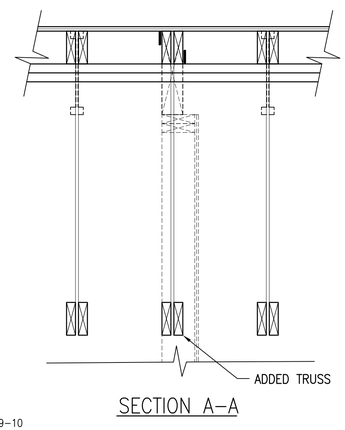

CCE-023-089-10

DETAIL SC: 1"=1'-0" 8

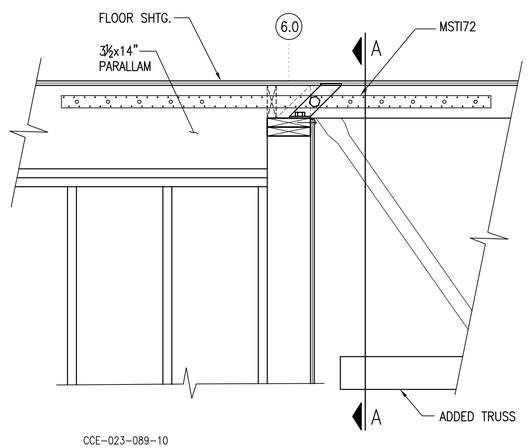

CCE-023-089-10

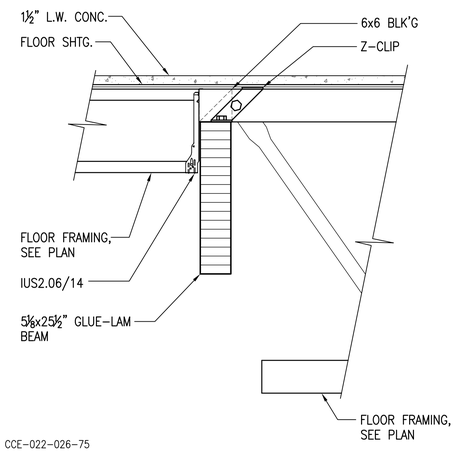

CCE-022-026-75

DETAIL SC: 1"=1'-0" 5

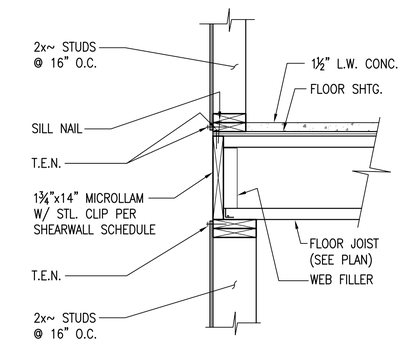

CCE-23-027-001

DETAIL SC: 1"=1'-0" 2

DETAIL SC: 1"=1'-0" 12

DETAIL SC: 1"=1'-0" 9

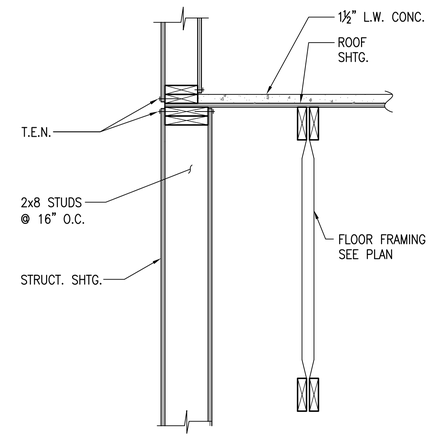

CCE-021-018-13

DETAIL SC: 1 1/2"=1'-0" 6

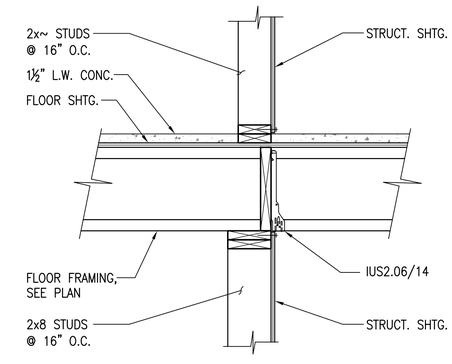

CCE-022-026-75

DETAIL SC: 1"=1'-0" 3

REVISIONS	BY

REGISTERED PROFESSIONAL ENGINEER DEAN GLEN JOHNSON No. C 66027 Exp. 6/30/2026 CIVIL STATE OF CALIFORNIA

CCE
STRUCTURAL DESIGN
CENTRAL COAST ENGINEERS, INC.
P.O. BOX 2503
SALINAS, CA 93902
P 831.757.5534
F 831.757.2226

PROJECT TITLE:

OUR LADY OF ASSUMPTION CHURCH

100 SALINAS ROAD, PAJARO, CA 95076
APN # 117-323-011-000

SHEET TITLE:

STRUCTURAL DETAILS

JOB No.	CCE-23-089
DATE:	10/31/2024
SCALE:	AS NOTED
DRAWN BY:	O.R.
SHEET No.:	S3.2
# OF SHEETS	

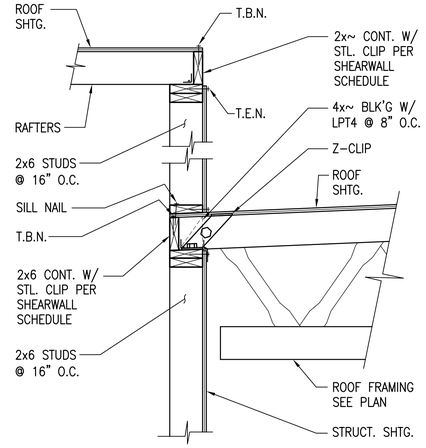

CCE-021-018-13

DETAIL SC: 1"=1'-0" 7

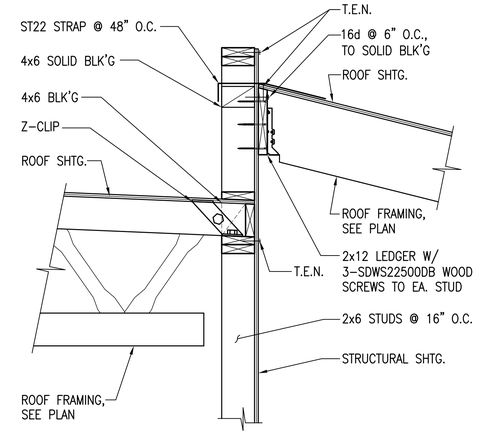

CCE-022-026-75

DETAIL SC: 1"=1'-0" 4

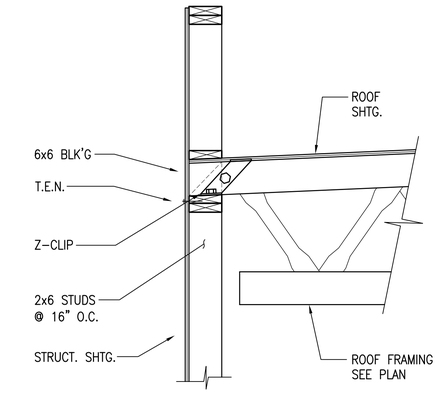

CCE-021-018-13

SC: 1"=1'-0" 1

DETAIL SC: 1"=1'-0" 10

DETAIL SC: 1 1/2"=1'-0" 8

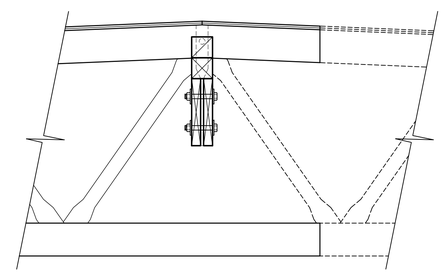

CCE-022-026-75

DETAIL SC: 1"=1'-0" 5

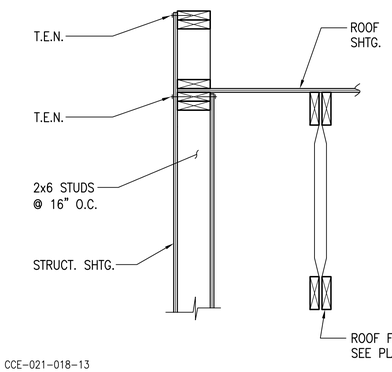

CCE-021-018-13

DETAIL SC: 1"=1'-0" 2

DETAIL N.T.S. 11

DETAIL SC: 1"=1'-0" 9

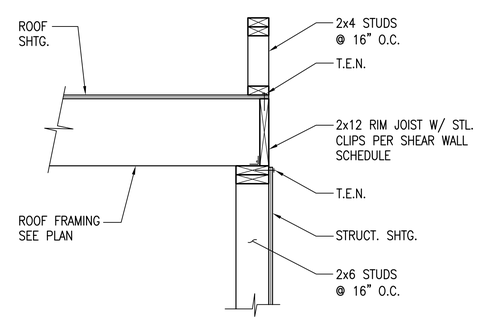

CCE-021-018-13

DETAIL SC: 1"=1'-0" 6

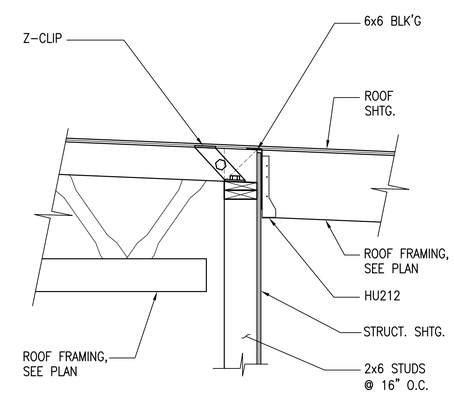

CCE-022-026-75

DETAIL SC: 1"=1'-0" 3

DETAIL SC: 1"=1'-0" 12

REVISIONS	BY

REGISTERED PROFESSIONAL ENGINEER GLEN JOHNSON No. C 66027 Exp. 6/30/2026 CIVIL STATE OF CALIFORNIA

CCE
STRUCTURAL DESIGN
P.O. Box 2503
SALINAS, CA 93902
P 831.757.5534
F 831.757.2226
CENTRAL COAST ENGINEERS, INC.

PROJECT TITLE:

OUR LADY OF ASSUMPTION CHURCH

100 SALINAS ROAD, PAJARO, CA 95076
APN # 117-323-011-000

SHEET TITLE:

STRUCTURAL DETAILS

JOB No.	CCE-23-089
DATE:	10/31/2024
SCALE:	AS NOTED
DRAWN BY:	O.R.
SHEET No.:	S3.3
# OF SHEETS	

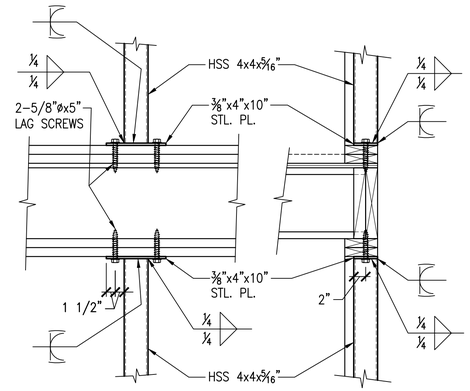

CCE-21-018-E12B

DETAIL SC: 1"=1'-0" 4

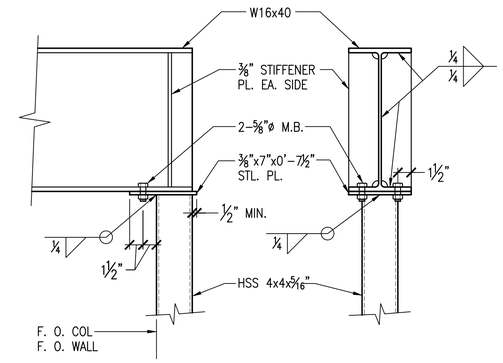

CCE-21-018-E07

DETAIL SC: 1 1/2"=1'-0" 1

DETAIL N.T.S. 11

DETAIL SC: 1 1/2"=1'-0" 8

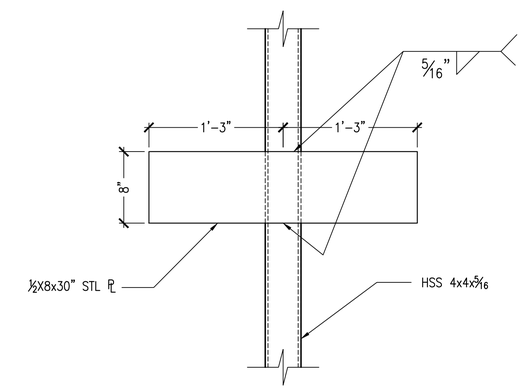

CCE-21-018-E08

DETAIL SC: 1"=1'-0" 5

DETAIL SC: 1 1/2"=1'-0" 2

DETAIL SC: 1"=1'-0" 12

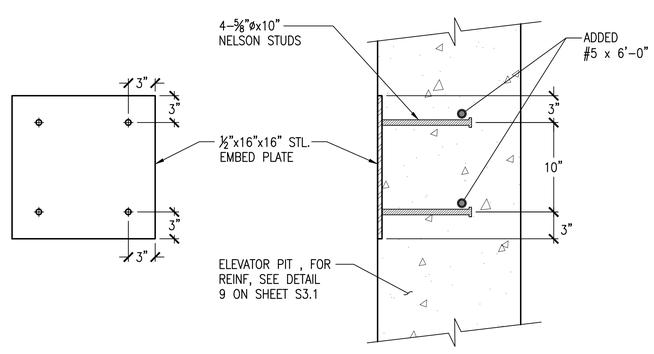

CCE-21-018-E06

DETAIL SC: 1 1/2"=1'-0" 6

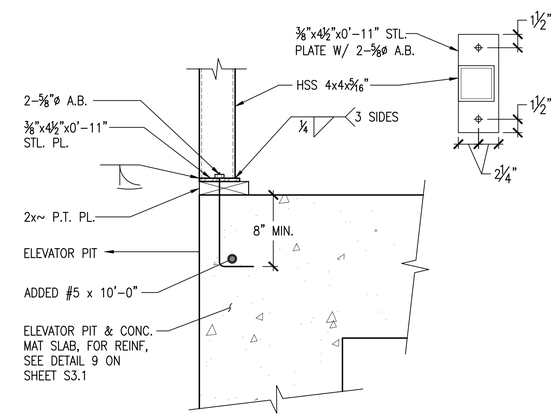

CCE-21-018-E05

DETAIL SC: 1 1/2"=1'-0" 3

REVISIONS	BY

Derek Johnson

REGISTERED PROFESSIONAL ENGINEER DEREK GLEN JOHNSON No. C 66027 Exp. 6/30/2026 CIVIL STATE OF CALIFORNIA

CCE
STRUCTURAL DESIGN
P.O. Box 2503
SALINAS, CA 93902
P 831.757.5554
F 831.757.2226
CENTRAL COAST ENGINEERS, INC.

PROJECT TITLE:

OUR LADY OF ASSUMPTION CHURCH

100 SALINAS ROAD, PAJARO, CA 95076
APN # 117-323-011-000

SHEET TITLE: ELEVATOR DETAILS

JOB No.	CCE-23-089
DATE:	10/31/2024
SCALE:	AS NOTED
DRAWN BY:	O.R.
SHEET No.:	S4.1
# OF SHEETS	

INDOOR UNIT SCHEDULE

CODE	MFR	MODEL	SUPPLY FAN				ELECTRICAL			COOLING		HEATING				COMMENTS
			CFM	OSA	ESP (in)	BHP	V/PH	MCA	MOCP	CAPACITY (MBH)		CAP	HT W/O	WEIGHT	AREAS SERVED/	
										TOTAL	SENS	MBH	LEVELING	(LBS)	FLOOR	
IU-1.1	SAMSUNG	AM018RNMDCH/AA	550	40	0.10	153W	240/1	0.65	1	18	16	20	10	89.3	113	
IU-1.2	SAMSUNG	AM018RNMDCH/AA	550	*	0.08	153W	240/1	0.65	1	18	16	20	10	89.3	109, 110	
IU-1.3	SAMSUNG	AM024MNHDCH/AA	1,000	*	0.08	153W	240/1	0.81	1	24	20	27	10	89.3	100	
IU-1.4	SAMSUNG	AM024MNHDCH/AA	1,000	*	0.08	153W	240/1	0.81	1	24	20	27	10	89.3	100	
IU-1.5	SAMSUNG	AM024MNHDCH/AA	1,000	*	0.08	153W	240/1	0.81	1	24	20	27	10	89.3	100	
IU-1.6	SAMSUNG	AM024MNHDCH/AA	1,000	*	0.08	153W	240/1	0.81	1	24	20	27	10	89.3	HALLWAY & STAGE	
IU-1.7	SAMSUNG	AC012MNADCH/AA	250	0	0.00	27W	240/1	0.4	1	12	12	14	10	16.76	ELECTRONICS RM	
IU-2.1	SAMSUNG	AM009MNMDCH/AA	300	*	0.08	153W	240/1	0.25	1	9	7	10.5	10	69.4	207, 209	
IU-2.2	SAMSUNG	AM018RNMDCH/AA	550	*	0.08	153W	240/1	0.65	1	18	16	20	10	89.3	203 THRU 206	
IU-2.3	SAMSUNG	AM018RNMDCH/AA	550	*	0.08	153W	240/1	0.65	1	18	16	20	10	89.3	NORTH HALLWAY	
IU-2.4	SAMSUNG	AM009MNMDCH/AA	300	*	0.08	153W	240/1	0.25	1	9	7	10.5	10	69.4	215	
IU-2.5	SAMSUNG	AM009MNMDCH/AA	300	*	0.08	153W	240/1	0.25	1	9	7	10.5	10	69.4	215	
IU-2.6	SAMSUNG	AM018RNMDCH/AA	550	*	0.08	153W	240/1	0.65	1	18	16	20	10	89.3	SOUTH HALLWAY	
IU-2.7	SAMSUNG	AM018RNMDCH/AA	550	*	0.08	153W	240/1	0.65	1	18	16	20	10	89.3	213, 214	
ERV-1	SAMSUNG	AN035N5EDAV/AA	300	300	0.10	500W	115/1	4.17	10	--	--	--	27	132	LOWER FLOOR	

EXHAUST FAN SCHEDULE

CODE	MFR	MODEL	CFM	ESP (in)	RPM	BHP	MOTOR	V/PH	HT. W/O	WEIGHT	AREAS SERVED	SONES	COMMENTS
							HP		ISOLATORS	(LBS)			
EF-1.1	GREENHECK	CSP-A710-VG	150	0.15	607	0.01	0.25	115/1	15	36	105, 107, 108	<0.3	BDD
EF1.2	PANASONIC	FV-0511VK2	110	0.10	920	9.9W	9.9W	115/1	8	18	103	<0.3	BDD
EF1.3	PANASONIC	FV-0511VK2	110	0.10	920	9.9W	9.9W	115/1	8	18	103	<0.3	BDD
EF-2.1	GREENHECK	G-143-VG	1040	0.20	718	0.08	0.25	115/1	36	45	210, 211, 212	5.6	BDD
EF-2.2	GREENHECK	G-070-E	150	0.15	1050	0.01	1/100	115/1	24	21	200, 201, 202	1.5	BDD

MAKE-UP AIR UNIT SCHEDULE

CODE	MFR	MODEL	FAN					ELECTRICAL			HEIGHT	WEIGHT	COMMENTS
			CFM	OSA	ESP	RPM	HP	V/PH	MCA	MOCP			
MAU-1	GREENHECK	SAF-112	2,200	2,200	0.25	609	0.39	115/1	9.8	15.0	42	193	

OUTDOOR UNIT SCHEDULE

CODE	MFR.	MODEL	REFR	CAPACITY (MBH)		EFFICIENCY		V/PH	MCA	MOCP	WT.	HT. W/O	HOT GAS	LOW AMB.	CRTS.	EQUIP.	COMMENTS
				CLG	HTG	SEER	HSPF				(LBS)	LEVELING	BYPASS	CONTROL		SERVED	
OU-1	SAMSUNG	AM060MXMDCH/AA	R410A	60	66	17.5	10.9	240/1	32	50	275.6	56	N	N	TSTAT	IU-X.X	
OU-2	SAMSUNG	AM060MXMDCH/AA	R410A	60	66	17.5	10.9	240/1	32	50	275.6	56	N	N	TSTAT	IU-X.X	
OU-3	SAMSUNG	AM060MXMDCH/AA	R410A	60	66	17.5	10.9	240/1	32	50	275.6	56	N	N	TSTAT	IU-X.X	
OU-4	SAMSUNG	AC012KXADCH/AA	R410A	12	14	18	9.5	208/1	10.7	15	79.81	22	N	N	TSTAT	IU-1.7	

ROOFTOP UNIT SCHEDULE

CODE	MFR	MODEL	NOM	EFFICIENCY		FAN					ECON	PWR EXH	ELECTRICAL			HTG MBH		HEIGHT	WEIGHT	COMMENTS
			TONS	IEER	AFUE	CFM	OSA	ESP	RPM	BHP	(Y/N)		V/PH	MCA	MOCP	IN	OUT			
RTU-1	CARRIER	48HCFD17KCD5-0B5J0	15	13.5	0.81	6,200	1,200	1.00	883	3.59	Y	Y	208/3	91	100.0	400	324	47.75	2515	

SYMBOLS & ABBREVIATIONS (MECHANICAL)

BT	BYPASS TIMER
℄	CENTER LINE
CD	CONDENSATE DRAIN
Ø	DIAMETER
	EXHAUST, RETURN, SUPPLY AIR DUCT (EXISTING)
	EXHAUST, RETURN, SUPPLY AIR DUCT (NEW)
	EXTENT OF DEMOLITION
	EXHAUST DUCT UP, DOWN, PENE & DEMO
	FIRE/SMOKE DAMPER
	FIRE DAMPER
	POINT OF CONNECTION
	P/T PLUG
	RETURN OR EXHAUST AIR
	RETURN DUCT UP, DOWN, PENE & DEMO
S	SPEED CONTROL SWITCH
X	SPIN-IN EXTRACTOR/DAMPER
	SUPPLY DUCT UP, DOWN, PENE & DEMO
	SUPPLY OR OUTSIDE AIR
T	THERMOSTAT at + 48"
	TO BE REMOVED
	TRANSFER AIR
	TURNING VANES
	VOLUME DAMPER

AD	ACCESS DOOR
AFF	ABOVE FINISH FLOOR
AL	ACOUSTICALLY LINED
AP	ACCESS PANEL
BD	BALANCING DAMPER
BDD	BACKDRAFT DAMPER
BHP	BRAKE HORSE POWER
BJ	BETWEEN JOIST
BTU	BRITISH THERMAL UNIT
C.	CONDUIT
CA	COMBUSTION AIR
CD	CONDENSATE DRAIN
CFM	CUBIC FEET PER MINUTE
DEMO	DEMOLITION
DL	DOOR LOUVER
(E)	EXISTING
EAD	EXHAUST AIR DUCT
EC	ELECTRICAL CONTRACTOR
EDB	ENTERING DRY BULB
EOD	EXTENT OF DEMOLITION
ETR	EXISTING TO REMAIN
EWB	ENTERING WET BULB
EWT	ENTERING WATER TEMPERATURE
°F	DEGREES FAHRENHEIT
FC	FLEXIBLE CONNECTION
FD	FIRE DAMPER
FLA	FULL LOAD AMPS
FSD	FIRE SMOKE DAMPER
FT.HD.	FEET HEAD
FTR	FLUE THRU ROOF
GC	GENERAL CONTRACTOR
GPM	GALLONS PER MINUTE
HP	HORSE POWER
KW	KILOWATTS
LBS	POUNDS
LWT	LEAVING WATER TEMPERATURE
MBH	1,000 BTU/HR
MC	MECHANICAL CONTRACTOR
(N)	NEW
NIC	NOT IN CONTRACT
NTS	NOT TO SCALE
OBD	OPPOSED BLADE DAMPER
OSA	OUTSIDE AIR
PC	PLUMBING CONTRACTOR
PENE	PENETRATION
PD	PRESSURE DROP
PH	PHASE
POC	POINT OF CONNECTION
P/N	PART NUMBER
PRV	PRESSURE REDUCING VALVE
PSI	POUNDS PER SQUARE INCH
P/T	PRESSURE / TEMPERATURE
RA	RETURN AIR
RAD	RETURN AIR DUCT
(RL)	RELOCATE
RPM	REVOLUTIONS PER MINUTE
SA	SUPPLY AIR
SAD	SUPPLY AIR DUCT
SD	SUPPLY DIFFUSER
SP	STATIC PRESSURE
SS	STAINLESS STEEL
STD	STANDARD
TV	TURNING VANES
TYP	TYPICAL
UCD	UNDERCUT DOOR
UON	UNLESS OTHERWISE NOTED
V	VOLT
VD	VOLUME DAMPER
VIF	VERIFY IN FIELD
W/	WITH
WC	WATER COLUMN
WT	WEIGHT
W/O	WITH OUT

GENERAL MECHANICAL NOTES

1. ENTIRE INSTALLATION SHALL CONFORM TO THE REQUIREMENTS OF THE 2016 CALIFORNIA MECHANICAL CODE, CALIFORNIA PLUMBING CODE, CALIFORNIA BUILDING CODE, NATIONAL FIRE PROTECTION CODES, AND ALL OTHER APPLICABLE CODES AND REGULATIONS, INCLUDING THE CALIFORNIA ENERGY CONSERVATION STANDARDS OF TITLE 24.
2. LOCATIONS OF ALL CEILING DIFFUSERS, REGISTERS AND GRILLES ARE DETAILED ON THE ARCHITECTURAL REFLECTED CEILING PLAN AND ROOM ELEVATIONS.
3. LOCATION OF ALL ROOF OPENINGS AND THE LOCATION OF ALL ROOF MOUNTED EQUIPMENT SUPPORTS ARE DETAILED ON THE STRUCTURAL AND ARCHITECTURAL PLANS.
4. PLATFORMS, CURBS AND FLASHING FOR EQUIPMENT SHALL BE AS INDICATED ON THE STRUCTURAL AND ARCHITECTURAL PLANS. COORDINATE THE EXACT SIZES OF REQUIRED OPENINGS AND SUPPORT FOR THE FURNISHED EQUIPMENT.
5. ALL EQUIPMENT SHALL BE INSTALLED IN STRICT ACCORDANCE WITH THE EQUIPMENT MANUFACTURER'S RECOMMENDATIONS. PROVIDE ALL FITTINGS, TRANSITIONS, DAMPERS, VALVES, AND OTHER DEVICES REQUIRED FOR A COMPLETE WORKABLE INSTALLATION.
6. ALL DUCTWORK SHALL BE CONSTRUCTED, ERECTED, AND TESTED IN ACCORDANCE WITH THE APPLICABLE SMACNA STANDARDS.
7. DUCTWORK SHALL BE INSULATED WITH 2" FIBERGLASS INSULATION AND ALL SERVICE JACKET. PROVIDE 1" ACOUSTICAL LINER WHERE SHOWN ON PLANS. DUCT DIMENSIONS ON PLANS ARE NET CLEAR INTERIOR.
8. MANUAL DAMPERS SHALL BE PROVIDED IN ALL DUCT BRANCHES TO INDIVIDUAL DIFFUSERS, GRILLES AND REGISTERS.
9. ALL EQUIPMENT, DUCTS, PIPING, AND OTHER DEVICES AND MATERIALS INSTALLED OUTSIDE THE BUILDING OR OTHERWISE EXPOSED TO THE WEATHER SHALL BE COMPLETELY WEATHERPROOFED.
10. PIPES AND DUCTWORK SHALL BE SUPPORTED AND BRACED PER SMACNA "GUIDELINES FOR SEISMIC RESTRAINTS OF MECHANICAL SYSTEMS AND PLUMBING PIPING SYSTEMS."
11. EXPOSED PIPING ALLOWED ONLY WHERE INDICATED. PROVIDE ESCUTCHEONS IN FINISHED AREAS.
12. PROVIDE ROUGH-IN AND FINAL CONNECTIONS FOR EQUIPMENT PROVIDED UNDER OTHER DIVISIONS OF THE SPECIFICATIONS. SEE ARCHITECTURAL DRAWINGS FOR LOCATIONS OF EQUIPMENT.
13. PENETRATIONS OF RATED ASSEMBLIES SHALL BE FIRE STOPPED BY AN APPROVED MATERIAL AS PRESCRIBED IN CBC SECTION 714.
14. REFER TO STRUCTURAL DRAWING FOR LOCATIONS OF BEAMS, SHEAR WALLS AND MEMBERS. ALL DRILLING OF STRUCTURAL BEAMS AND MEMBERS TO BE COORDINATED WITH THE STRUCTURAL ENGINEER. ALL HOLES SHALL BE MINIMUM SIZE AND APPROVED BY STRUCTURAL ENGINEER PRIOR TO DRILLING.
15. FIELD VERIFY LOCATION AND SIZE OF ALL EXISTING PIPING, DUCTWORK AND EQUIPMENT PRIOR TO FABRICATION OF ANY NEW WORK.
16. STRUCTURAL STEEL SHALL CONFORM TO ASTM A-36. BOLTS SHALL CONFORM TO ASTM A-307. FABRICATION, ERECTION, WELDING AND PAINTING SHALL BE IN ACCORDANCE WITH THE LATEST EDITION OF THE AMERICAN INSTITUTE OF STEEL CONSTRUCTION SPECIFICATIONS. ALL STEEL EXPOSED TO WEATHER SHALL BE GALVANIZED.
17. THE INTENT OF THE DRAWINGS AND SPECIFICATIONS IS TO RECONSTRUCT THE BUILDING IN ACCORDANCE WITH THE 2016 EDITION OF THE TITLE 24 CALIFORNIA CODE OF REGULATIONS. SHOULD ANY CONDITION DEVELOP NOT COVERED BY THE CONTRACT DOCUMENTS WHEREIN THE FINISHED WORK WILL NOT COMPLY WITH SAID TITLE 24 CCR, A CHANGE ORDER DETAILING AND SPECIFYING THE REQUIRED WORK SHALL BE SUBMITTED AND APPROVED BY THE DESIGNER TEAM BEFORE PROCEEDING WITH THE WORK.
18. ATTACHMENTS OF EQUIPMENT WEIGHING LESS THAN 400 LBS. AND SUPPORTED DIRECTLY FROM THE FLOOR OR ROOF STRUCTURE, FURNITURE OR TEMPORARY OR MOVEABLE EQUIPMENT WEIGHING LESS THAN 20 LBS. THAT IS SUPPORTED BY VIBRATION ISOLATOR DEVICES SUSPENDED FROM THE ROOF, WALL OR FLOOR NEED NOT BE DETAILED ON THE PLANS (CCR TITLE 24, PART 2, SECTION 7.125 EXCEPTION). HOWEVER, SUCH EQUIPMENT MUST BE SUPPORTED AND ANCHORED TO RESIST THE FORCES PRESCRIBED PER ASCE-7, CHAPTER 13 AS MODIFIED BY CBC 1613/1615 AND THE ANCHORAGE SHALL BE APPROVED BY THE STRUCTURAL ENGINEER OF RECORD.
19. ROOFTOP UNIT ANCHORAGE: PROVIDE 3/8" DIA. EYEBOLTS THROUGH ROOFCURB WITH 1/8" DIA. STAINLESS STEEL AIRCRAFT CABLE LOOPS THROUGH RTU LIFTING LUGS. PROVIDE 1/8" SLACK IN LOOP. MIN. 4 PER UNIT.
20. DUCTWORK VISIBLE THROUGH DIFFUSERS AND REGISTERS SHALL BE PAINTED FLAT BLACK.
21. INSULATION MATERIAL SHALL MEET THE STATE QUALITY STANDARD PER SECTION 118 CALIFORNIA ENERGY CODE (CEC).
22. DOORS AND WINDOWS SHALL MEET THE MINIMUM INFILTRATION REQUIREMENTS PER SECTION 118 CEC.
23. ALL PIPING AND DUCTWORK SHALL BE INSULATED CONSISTENT WITH THE REQUIREMENTS OF SECTION 118, 123, 124 CEC. AND TABLE E 503.7.1 (9)(10)(11) OF MECHANICAL CODE.
24. ALL HVAC SYSTEMS SHALL MEET THE CONTROL REQUIREMENTS PER SECTIONS 112 AND 122 CEC.
25. ALL HVAC EQUIPMENT AND APPLIANCES SHALL MEET THE REQUIREMENTS OF SECTIONS 111-113, 115, AND 120-129 CEC.
26. SEE ARCHITECTURAL DRAWINGS FOR SECTIONS.

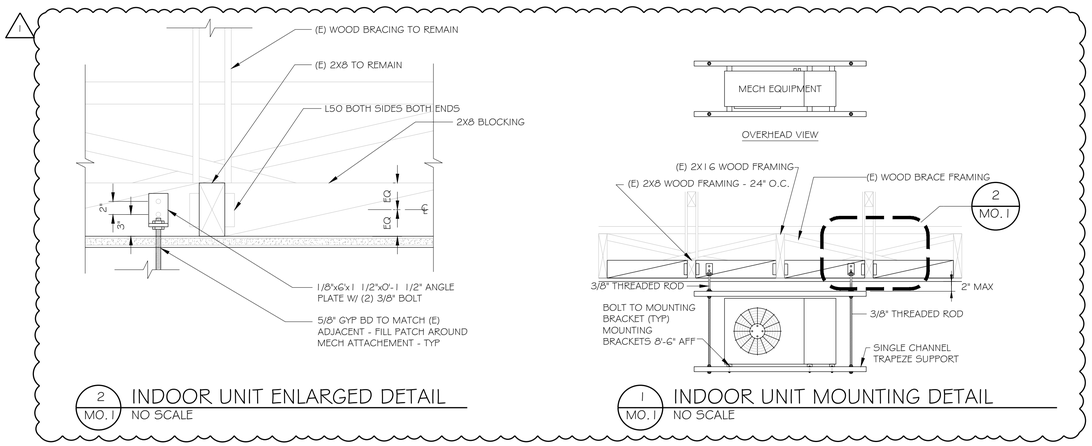

2 MO.1 INDOOR UNIT ENLARGED DETAIL
NO SCALE

1 MO.1 INDOOR UNIT MOUNTING DETAIL
NO SCALE

ZAL ENGINEERING
MECHANICAL CONSULTANTS
99 PACIFIC ST, STE 375G
MONTEREY, CA 93940
TELEPHONE (831) 641-7739
JOB NO. 19046.00

REGISTERED PROFESSIONAL ENGINEER
JAIME DALDIVAR MARTINEZ
No. 37306
EXP. 3/31/25
MECHANICAL
STATE OF CALIFORNIA

OUR LADY OF ASSUMPTION CHURCH
100 SALINAS ROAD
PAJARO, CA, 95076

NO.	DESCRIPTION	DATE
1	.	.
2		
3		
4		
5		

ENGINEER BY:
DRAWN BY:
CHECKED BY:
SHEET NUMBER
MO.1
SHEET OF

THE USE OF THESE PLANS AND SPECIFICATIONS IS RESTRICTED TO THE ORIGINAL SITE FOR WHICH THEY WERE PREPARED, AND PUBLICATION THEREOF IS EXPRESSLY LIMITED TO SUCH USE. RE-USE, REPRODUCTION OR PUBLICATION BY ANY METHOD IN WHOLE OR IN PART IS PROHIBITED. TITLE TO THE PLANS AND SPECIFICATIONS REMAINS WITH THE ENGINEER AND VISUAL CONTACT WITH THEM CONSTITUDES PRIMA FACE EVIDENCE OF THE ACCEPTANCE OF THESE RESTRICTIONS.

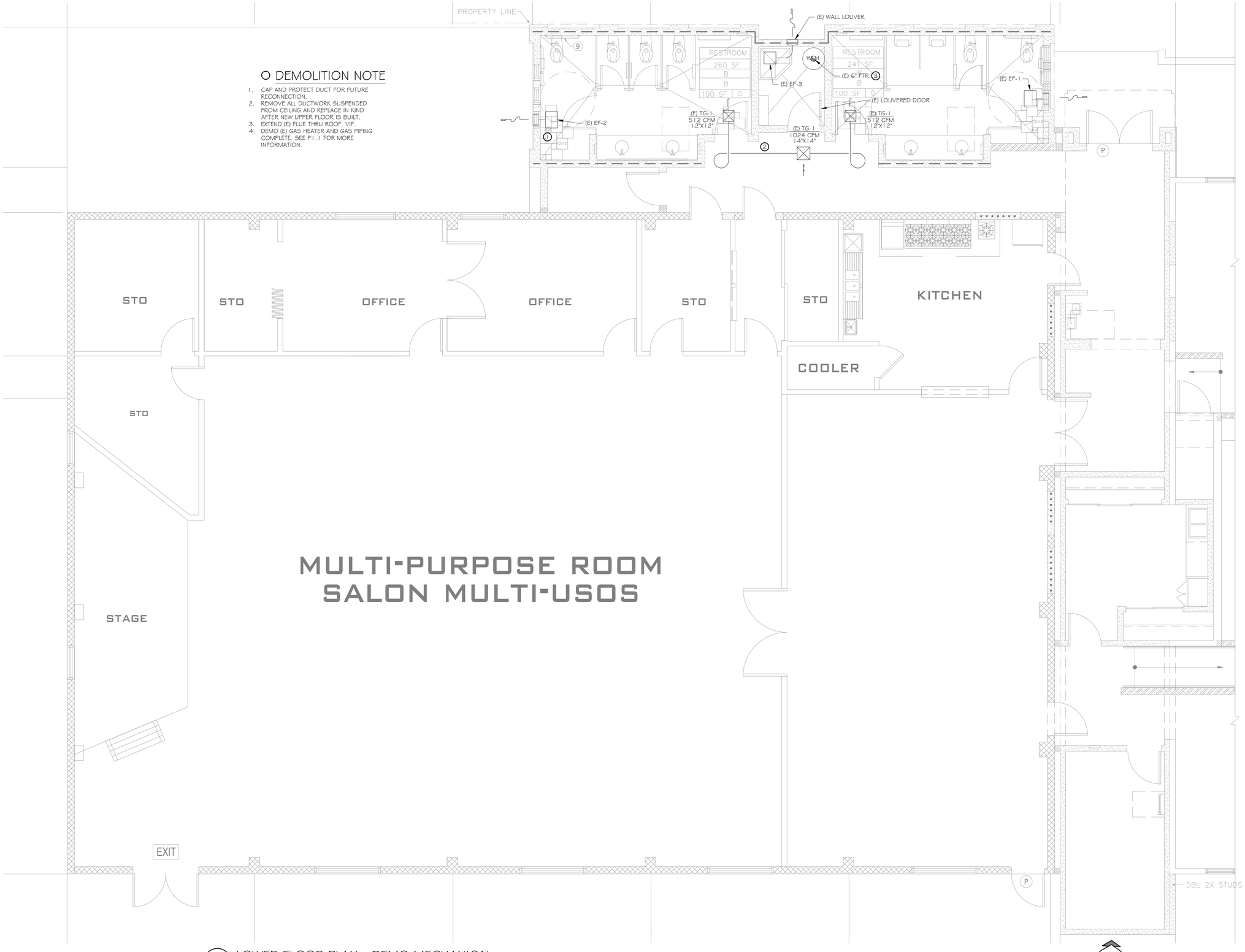

O DEMOLITION NOTE

1. CAP AND PROTECT DUCT FOR FUTURE RECONNECTION.
2. REMOVE ALL DUCTWORK SUSPENDED FROM CEILING AND REPLACE IN KIND AFTER NEW UPPER FLOOR IS BUILT.
3. EXTEND (E) FLUE THRU ROOF. VIF.
4. DEMO (E) GAS HEATER AND GAS PIPING COMPLETE. SEE P1.1 FOR MORE INFORMATION.

1 / M1.1 LOWER FLOOR PLAN - DEMO MECHANICAL
SCALE: 1/4" = 1'-0"

0 1 2 4 8
SCALE: 1/4" = 1'-0"

ZAL ENGINEERING

ZAL ENGINEERING
MECHANICAL CONSULTANTS
99 PACIFIC ST, STE 375G
MONTEREY, CA 93940
TELEPHONE (831) 641-7739
JOB NO. 19046.00

REGISTERED PROFESSIONAL ENGINEER
JAIME DALDIVAR MARTINEZ
No. 37306
EXP. 3/31/25
MECHANICAL
STATE OF CALIFORNIA

OUR LADY OF ASSUMPTION CHURCH

100 SALINAS ROAD
PAJARO, CA, 95076

NO.	DESCRIPTION	DATE
1	.	.
2		
3		
4		
5		

ENGINEER BY:

DRAWN BY:

CHECKED BY:

SHEET NUMBER

M1.1

SHEET OF

THE USE OF THESE PLANS AND SPECIFICATIONS IS RESTRICTED TO THE ORIGINAL SITE FOR WHICH THEY WERE PREPARED, AND PUBLICATION THEREOF IS EXPRESSLY LIMITED TO SUCH USE. RE-USE, REPRODUCTION OR PUBLICATION BY ANY METHOD IN WHOLE OR IN PART IS PROHIBITED. TITLE TO THE PLANS AND SPECIFICATIONS REMAINS WITH THE ENGINEER AND VISUAL CONTACT WITH THEM CONSTITUDES PRIMA FACIE EVIDENCE OF THE ACCEPTANCE OF THESE RESTRICTIONS.

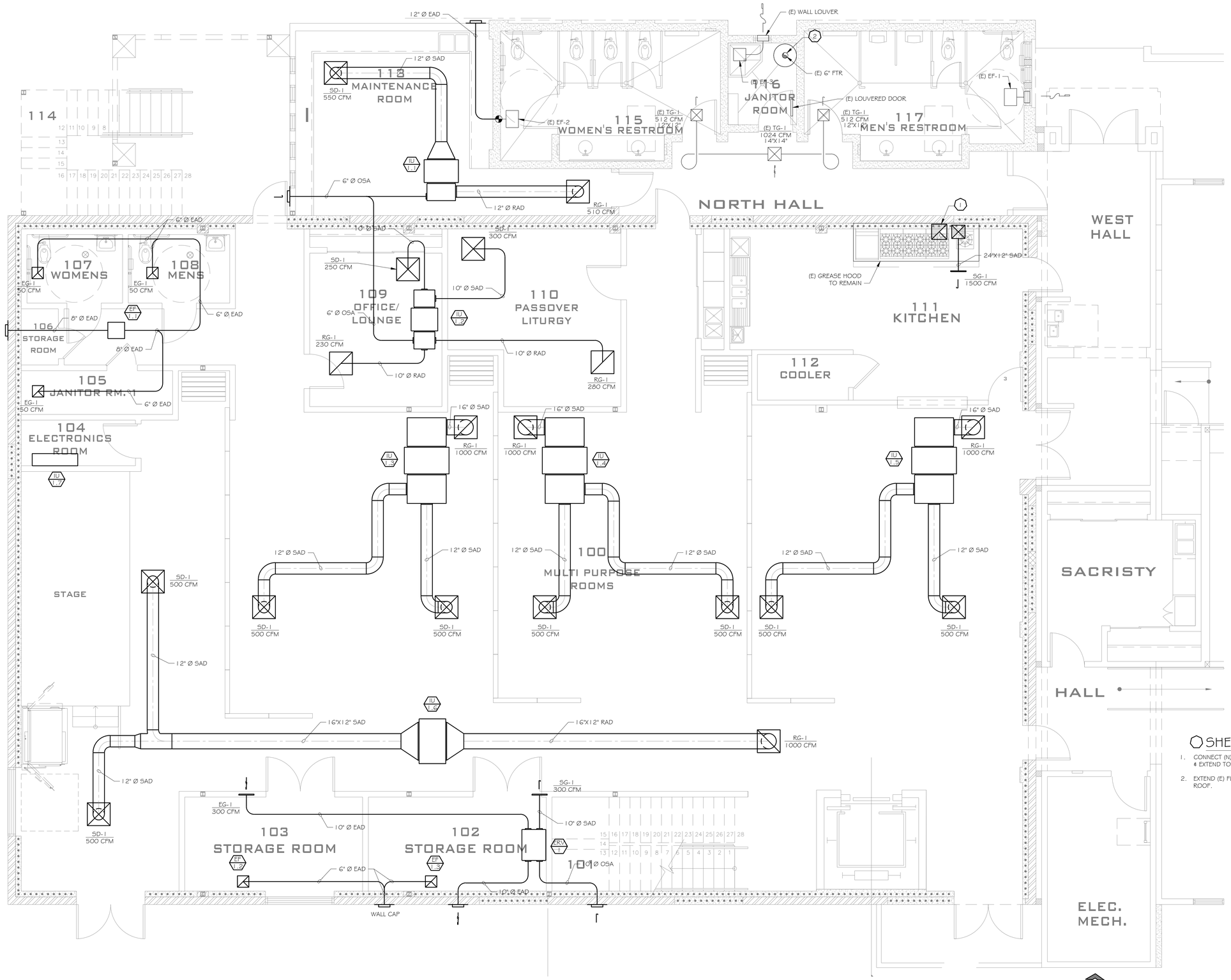

SHEET NOTES

1. CONNECT (N) GREASE DUCT TO (E) HOOD & EXTEND TO RELOCATED GREASE FAN.
2. EXTEND (E) FLUE TO TERMINATE ABOVE ROOF.

1 / M2.1 LOWER FLOOR PLAN - NEW MECHANICAL
SCALE: 1/4" = 1'-0"

SCALE: 1/4" = 1'-0"

ZAL ENGINEERING

ZAL ENGINEERING
MECHANICAL CONSULTANTS
99 PACIFIC ST, STE 375G
MONTEREY, CA 93940
TELEPHONE (831) 641-7739
JOB NO. 19046.00

REGISTERED PROFESSIONAL ENGINEER
JAIME BOLDIVAR MARTINEZ
No. 37306
EXP. 3/31/25
MECHANICAL
STATE OF CALIFORNIA

OUR LADY OF ASSUMPTION CHURCH

100 SALINAS ROAD
PAJARO, CA, 95076

NO.	DESCRIPTION	DATE
1		
2		
3		
4		
5		

ENGINEER BY:

DRAWN BY:

CHECKED BY:

SHEET NUMBER
M2.1

SHEET OF

THE USE OF THESE PLANS AND SPECIFICATIONS IS RESTRICTED TO THE ORIGINAL SITE FOR WHICH THEY WERE PREPARED, AND PUBLICATION THEREOF IS EXPRESSLY LIMITED TO SUCH USE. RE-USE, REPRODUCTION OR PUBLICATION BY ANY METHOD IN WHOLE OR IN PART IS PROHIBITED. TITLE TO THE PLANS AND SPECIFICATIONS REMAINS WITH THE ENGINEER AND VISUAL CONTACT WITH THEM CONSTITUDES PRIMA FACIE EVIDENCE OF THE ACCEPTANCE OF THESE RESTRICTIONS.

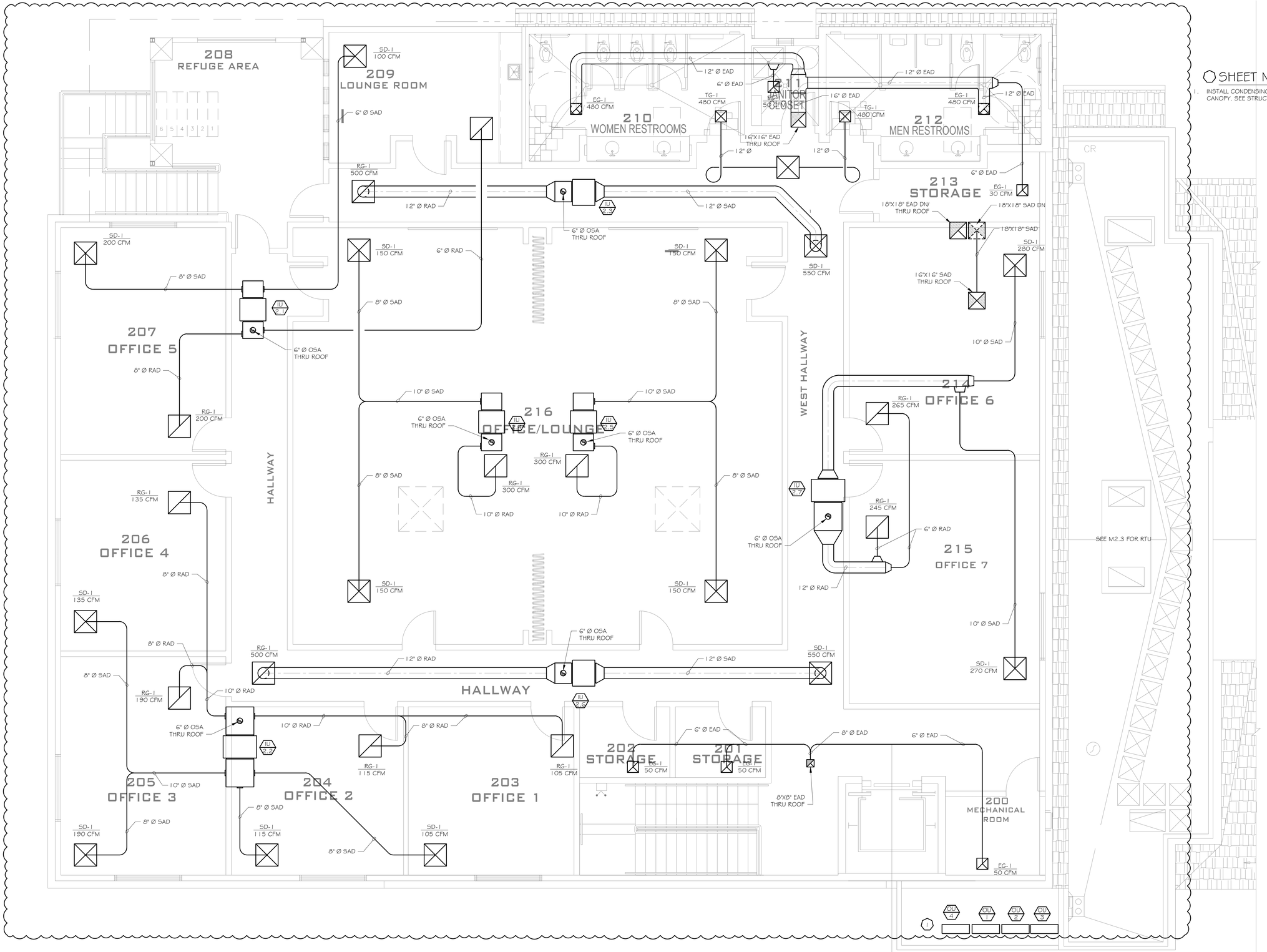

SHEET NOTES

1. INSTALL CONDENSING UNITS ON CANOPY. SEE STRUCTURAL FOR DETAILS.

1 / M2.2 UPPER FLOOR PLAN - NEW MECHANICAL
SCALE: 1/4" = 1'-0"

SCALE: 1/4" = 1'-0"

ZAL ENGINEERING
MECHANICAL CONSULTANTS
99 PACIFIC ST, STE 375G
MONTEREY, CA 93940
TELEPHONE (831) 641-7739
JOB NO. 19046.00

REGISTERED PROFESSIONAL ENGINEER
JAIME DALDIVAR MARTINEZ
No. 37306
EXP. 3/31/25
MECHANICAL
STATE OF CALIFORNIA

OUR LADY OF ASSUMPTION CHURCH

100 SALINAS ROAD
PAJARO, CA, 95076

NO.	DESCRIPTION	DATE
1	.	.
2		
3		
4		
5		

ENGINEER BY:

DRAWN BY:

CHECKED BY:

SHEET NUMBER
M2.2

SHEET OF

THE USE OF THESE PLANS AND SPECIFICATIONS IS RESTRICTED TO THE ORIGINAL SITE FOR WHICH THEY WERE PREPARED, AND PUBLICATION THEREOF IS EXPRESSLY LIMITED TO SUCH USE. RE-USE, REPRODUCTION OR PUBLICATION BY ANY METHOD IN WHOLE OR IN PART IS PROHIBITED. TITLE TO THE PLANS AND SPECIFICATIONS REMAINS WITH THE ENGINEER AND VISUAL CONTACT WITH THEM CONSTITUDES PRIMA FACIE EVIDENCE OF THE ACCEPTANCE OF THESE RESTRICTIONS.

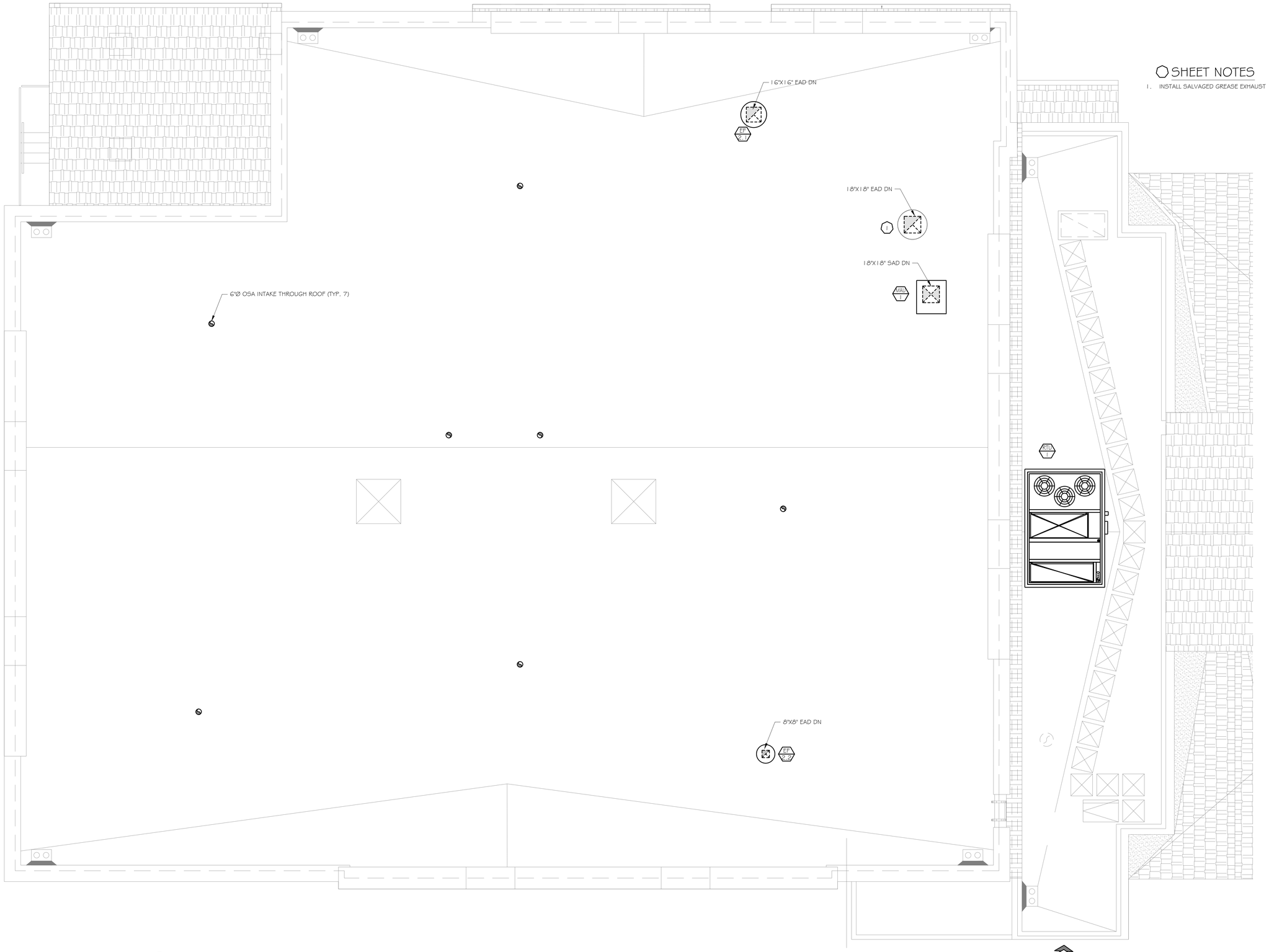

SHEET NOTES

1. INSTALL SALVAGED GREASE EXHAUST

1 / M2.3 ROOF PLAN - NEW MECHANICAL
SCALE: 1/4" = 1'-0"

0 1 2 4 8
SCALE: 1/4" = 1'-0"

ZAL ENGINEERING

ZAL ENGINEERING
MECHANICAL CONSULTANTS
99 PACIFIC ST, STE 375G
MONTEREY, CA 93940
TELEPHONE (831) 641-7739
JOB NO. 19046.00

REGISTERED PROFESSIONAL ENGINEER
JAIME BALDIVIAR MARTINEZ
No. 37306
EXP. 3/31/25
MECHANICAL
STATE OF CALIFORNIA

OUR LADY OF ASSUMPTION CHURCH

100 SALINAS ROAD
PAJARO, CA, 95076

NO.	DESCRIPTION	DATE
1	.	.
2		
3		
4		
5		

ENGINEER BY:

DRAWN BY:

CHECKED BY:

SHEET NUMBER

M2.3

SHEET OF

THE USE OF THESE PLANS AND SPECIFICATIONS IS RESTRICTED TO THE ORIGINAL SITE FOR WHICH THEY WERE PREPARED, AND PUBLICATION THEREOF IS EXPRESSLY LIMITED TO SUCH USE. RE-USE, REPRODUCTION OR PUBLICATION BY ANY METHOD IN WHOLE OR IN PART IS PROHIBITED. TITLE TO THE PLANS AND SPECIFICATIONS REMAINS WITH THE ENGINEER AND VISUAL CONTACT WITH THEM CONSTITUDES PRIMA FACIE EVIDENCE OF THE ACCEPTANCE OF THESE RESTRICTIONS.

WATER HEATER SCHEDULE

CODE	LOCATION	SERVICE	GAS MBH	TANK GAL.	GPH @ F°	ELECTRICAL			WEIGHT	HEIGHT	PART	MFG	REMARKS
			INPUT	CAPACITY	RISE	H.P.	VOLT	PH	(LBS)	(IN)	NO.		
WH-1	2ND FL JANITOR CLOSET	DHW	150	50	190 @ 90F	--	120	1	180	63.75	BTS 150	A.O.SMITH	1, FULL WEIGHT= 597LBS
NOTES:	1. PROVIDE CONDENSATE NEUTRALIZER. SEISMIC STRAP AT EACH 1/3 OF ITS HEIGHT.												

PUMP SCHEDULE

CODE	LOCATION	SERVICE	GPM	FT. HD.	SUCT/DIS	PUMP	MOTOR DATA					WT	P/N	MFG.	REMARKS
					SIZE	RPM	H.P.	RPM	VOLT	PH	HZ				
CP-1	JANITOR CLOSETS	DHWR	5	12	3/4"	VAR	44W	VAR	115	1	60	3.5	006e3LC	TACO	

SYMBOLS & ABBREVIATIONS (PLUMBING)

	BALANCING COCK
	BALL VALVE
	CAP
	CHECK VALVE
	CLEANOUT
A	COMPRESSED AIR PIPING (E)
D	DEIONIZED WATER (EXISTING)
	DOMESTIC COLD WATER (EXISTING)
	DOMESTIC COLD WATER (NEW)
	DOMESTIC HOT WATER (EXISTING)
	DOMESTIC HOT WATER (NEW)
	DOMESTIC HOT WATER RETURN (EXISTING)
	DOMESTIC HOT WATER RETURN (NEW)
	DIRECTION OF FLOW
DSP	DRY STANDPIPE
FL	FIRE SPRINKLER PIPING
	FLANGED UNION
	FLOOR DRAIN
	FLOOR SINK
FM	FORCE MAIN
G	GAS PIPING (EXISTING)
G	GAS PIPING (NEW)
	GAS COCK
	GATE VALVE
	GLOBE VALVE
HPG	HIGH PRESSURE GAS PIPING
	HOSE BIBB (3/4" MIN.)
LPG	LIQUID PETROLEUM GAS PIPING (EXISTING)
LPG	LIQUID PETROLEUM GAS PIPING (NEW)
	PETES PLUG
	PIPE (ABOVE THE CEILING)
	PIPE HANGER
	PIPE TURNING UP (RISE)
	PIPE TURNING DOWN (DROP)
	PIPE TEE DOWN
	PRESSURE REDUCING VALVE
	T & PRV RELIEF VALVE
	POINT OF CONNECTION TO EXISTING
RWL	RAIN WATER LEADER (EXISTING)
RWL	RAIN WATER LEADER
	REDUCER
	ROOF DRAIN
SD	STORM DRAIN (EXISTING)
SD	STORM DRAIN (NEW)
	STRAINER
	SUB-SOIL PIPING
	UNION
VAC	VACUUM PIPING (EXISTING)
VAC	VACUUM PIPING (NEW)
	VENT PIPING (EXISTING)
	VENT PIPING (NEW)
	WASTE PIPING (EXISTING)
	(N) WASTE PIPING (NEW)
W	WASTE PIPING - UNDERGROUND (NEW)
GW	GREASE WASTE (EXISTING)
GW	GREASE WASTE (NEW)
WSP	WET STANDPIPE (EXISTING)
WSP	WET STANDPIPE (NEW)
	WATERHAMMER ARRESTOR (WHA)
	TRAP PRIMER (TP)

AFF	ABOVE FINISH FLOOR
AGCO	ACID GRADE CLEANOUT
AP	ACCESS PANEL
BV	BALL VALVE
CA	COMPRESSED AIR PIPING
CB	CATCH BASIN
CD	CONDENSATE
CFH	CUBIC FEET PER HOUR
CI	CAST IRON
CP	CHROME PLATED
DCW	DOMESTIC COLD WATER
DHW	DOMESTIC HOT WATER
DHWR	DOMESTIC HOT WATER RETURN
DCV	DETECTOR CHECK VALVE
DN	DOWN
DS	DOWN SPOUT
DSP	DRY STAND PIPE
(E)	EXISTING
EC	ELECTRICAL CONTRACTOR
EL	ELEVATION
(F)	FIRE SPRINKLER PIPING
FC	FLEX CONNECTOR
FCO	FLOOR CLEANOUT
FD	FLOOR DRAIN
FL	FIRE LINE
FM	FORCE MAIN
FS	FLOOR SINK
FSC	FIRE SPRINKLER CONTRACTOR
GC	GENERAL CONTRACTOR
GCO	GROUND CLEANOUT
GPM	GALLONS PER MINUTE
GW	GREASE WASTE
HB	HOSE BIBB
HPG	HIGH PRESSURE GAS
HWS	HOT WATER SUPPLY
IE:	INVERT ELEVATION
LAV	LAVATORY
LPG	LOW PRESSURE GAS
MC	MECHANICAL CONTRACTOR
NPW	NON POTABLE WATER
(N)	NEW
OFD	OVERFLOW DRAIN
PC	PLUMBING CONTRACTOR
PIV	POST INDICATION VALVE
POC	POINT OF CONNECTION
POD	POINT OF DEMOLITION
PP	PETES PLUG
PRV	PRESSURE REDUCING VALVE
PVC	POLYVINYL CHLORIDE PIPE
RD	ROOF DRAIN
RPBFP	BACKFLOW PREVENTOR REDUCED PRESSURE
RWL	RAIN WATER LEADER
SD	STORM DRAIN
SDCW	SOFT DOMESTIC COLD WATER
SDHW	SOFT DOMESTIC HOT WATER
SOV	SHUTOFF VALVE
SS	SANITARY SEWER
TP	TRAP PRIMER
V	VENT
VB	VALVE BOX
VAC	VACUUM
VIF	VERIFY IN FIELD
VTR	VENT THRU ROOF
W	WASTE
WC	WATER CLOSET
WCO	WALL CLEANOUT
WH	WATER HEATER
WHA	WATER HAMMER ARRESTOR
WM	WATER METER

GENERAL PLUMBING NOTES

1. ENTIRE INSTALLATION SHALL CONFORM TO THE REQUIREMENTS OF THE 2016 CALIFORNIA PLUMBING CODE AND ALL OTHER APPLICABLE CODES AND REGULATIONS, INCLUDING THE CALIFORNIA ENERGY CONSERVATION STANDARDS OF TITLE 24.
2. LOCATION OF ALL ROOF OPENINGS AND THE LOCATION OF ALL ROOF MOUNTED EQUIPMENT SUPPORTS ARE DETAILED ON THE STRUCTURAL AND ARCHITECTURAL PLANS.
3. PLATFORMS, CURBS AND FLASHING FOR EQUIPMENT SHALL BE AS INDICATED ON THE STRUCTURAL AND ARCHITECTURAL PLANS. COORDINATE THE EXACT SIZES OF REQUIRED OPENINGS AND SUPPORT FOR THE FURNISHED EQUIPMENT.
4. ALL EQUIPMENT SHALL BE INSTALLED IN STRICT ACCORDANCE WITH THE EQUIPMENT MANUFACTURER'S RECOMMENDATIONS. PROVIDE ALL FITTINGS, TRANSITIONS, VALVES, AND OTHER DEVICES REQUIRED FOR A COMPLETE WORKABLE INSTALLATION.
5. ALL EQUIPMENT, PIPING, AND OTHER DEVICES AND MATERIALS INSTALLED OUTSIDE THE BUILDING OR OTHERWISE EXPOSED TO THE WEATHER SHALL BE COMPLETELY WEATHERPROOFED.
6. PIPES SHALL BE SUPPORTED AND BRACED PER SMACNA "GUIDELINES FOR SEISMIC RESTRAINTS OF MECHANICAL SYSTEMS AND PLUMBING PIPING SYSTEMS."
7. COORDINATE PLUMBING SYSTEMS WITH WORK OF OTHER TRADES PRIOR TO ANY FABRICATION OR INSTALLATION. PROVIDE ALL FITTINGS, OFFSETS, AND TRANSITIONS AS REQUIRED FOR A COMPLETE WORKABLE INSTALLATION.
8. EXPOSED PIPING ALLOWED ONLY WHERE INDICATED. PROVIDE ESCUTCHEONS IN FINISHED AREAS.
9. MAINTENANCE LABEL SHALL BE AFFIXED TO ALL PLUMBING EQUIPMENT.
10. PROVIDE ROUGH-IN AND FINAL CONNECTIONS FOR EQUIPMENT PROVIDED UNDER OTHER DIVISIONS OF THE SPECIFICATIONS. SEE ARCHITECTURAL DRAWINGS FOR LOCATIONS OF EQUIPMENT.
11. PENETRATIONS OF RATED ASSEMBLIES SHALL BE FIRE STOPPED BY AN APPROVED MATERIAL AS PRESCRIBED IN CBC SECTION 714.
12. REFER TO STRUCTURAL DRAWING FOR LOCATIONS OF BEAMS, SHEAR WALLS AND MEMBERS. ALL DRILLING OF STRUCTURAL BEAMS AND MEMBERS TO BE COORDINATED WITH THE STRUCTURAL ENGINEER. ALL HOLES SHALL BE MINIMUM SIZE AND APPROVED BY STRUCTURAL ENGINEER PRIOR TO DRILLING.
13. FIELD VERIFY LOCATION AND SIZE OF ALL EXISTING PIPING, DUCTWORK AND EQUIPMENT PRIOR TO FABRICATION OF ANY NEW WORK.
14. ALL WATER CLOSETS CONTROLS SHALL BE ON THE SIDE OF THE FIXTURE AWAY FROM THE WALL.
15. ALL FAUCET CONTROLS SHALL BE OPERABLE WITH THE HAND AND SHALL NOT REQUIRE TIGHT GRASPING, PINCHING OR TWISTING OF THE WRIST.
16. PC SHALL PROVIDE CONCRETE INSERTS FOR HANGING PLUMBING EQUIPMENT, COORD. W/ GC.

ZAL ENGINEERING

ZAL ENGINEERING
MECHANICAL CONSULTANTS
99 PACIFIC ST, STE 375G
MONTEREY, CA 93940
TELEPHONE (831) 641-7739
JOB NO. 19046.00

REGISTERED PROFESSIONAL ENGINEER
JAIME BOLIVAR MARTINEZ
No. 37306
EXP. 3/31/25
MECHANICAL
STATE OF CALIFORNIA

OUR LADY OF ASSUMPTION CHURCH

100 SALINAS ROAD
PAJARO, CA, 95076

NO.	DESCRIPTION	DATE
1	.	.
2		
3		
4		
5		

ENGINEER BY:

DRAWN BY:

CHECKED BY:

SHEET NUMBER

P0.1

SHEET OF

THE USE OF THESE PLANS AND SPECIFICATIONS IS RESTRICTED TO THE ORIGINAL SITE FOR WHICH THEY WERE PREPARED, AND PUBLICATION THEREOF IS EXPRESSLY LIMITED TO SUCH USE. RE-USE, REPRODUCTION OR PUBLICATION BY ANY METHOD IN WHOLE OR IN PART IS PROHIBITED. TITLE TO THE PLANS AND SPECIFICATIONS REMAINS WITH THE ENGINEER AND VISUAL CONTACT WITH THEM CONSTITUDES PRIMA FACIE EVIDENCE OF THE ACCEPTANCE OF THESE RESTRICTIONS.

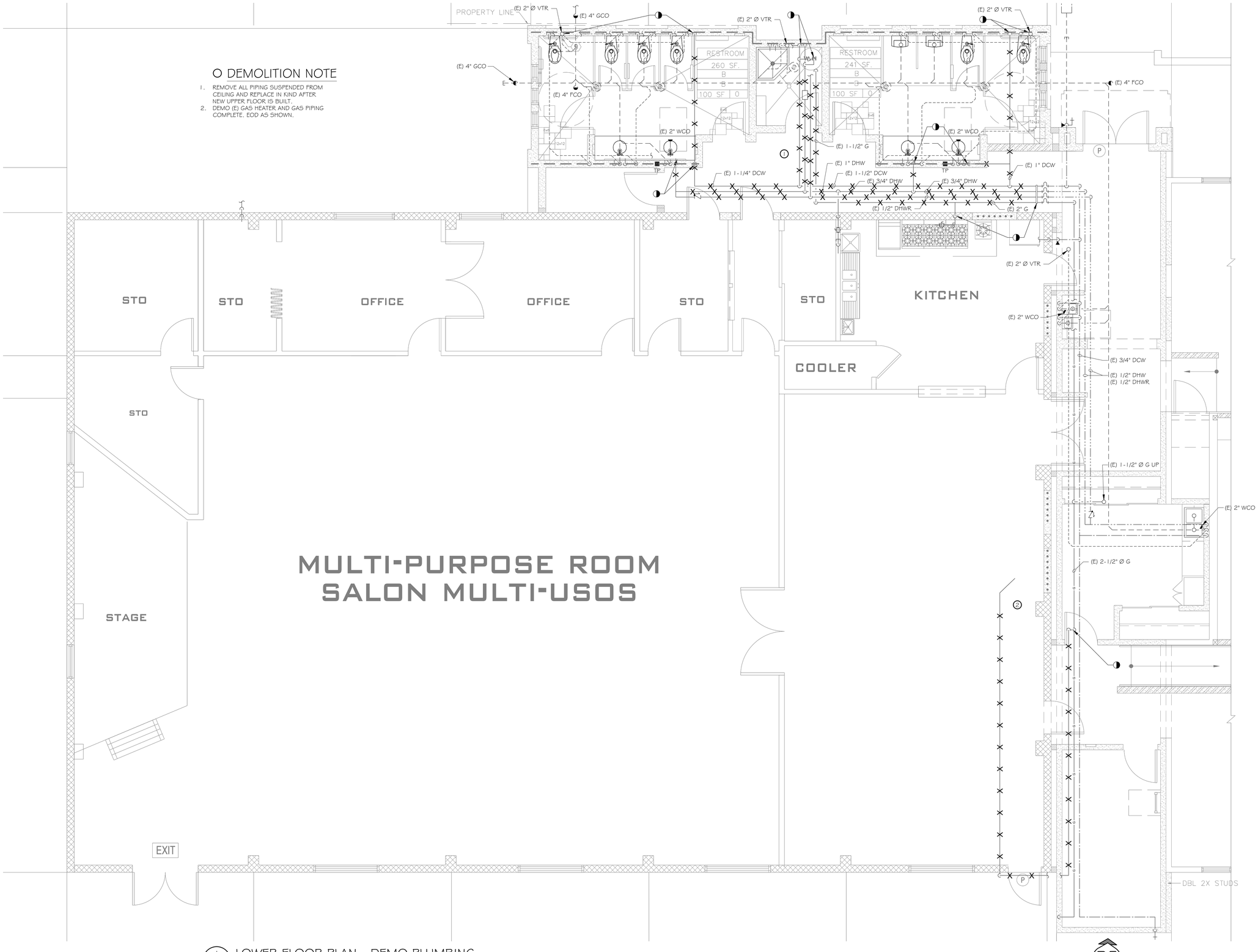

O DEMOLITION NOTE

1. REMOVE ALL PIPING SUSPENDED FROM CEILING AND REPLACE IN KIND AFTER NEW UPPER FLOOR IS BUILT.
2. DEMO (E) GAS HEATER AND GAS PIPING COMPLETE, EOD AS SHOWN.

1 / P1.1 LOWER FLOOR PLAN - DEMO PLUMBING
SCALE: 1/4" = 1'-0"

0 1 2 4 8
SCALE: 1/4" = 1'-0"

ZAL ENGINEERING

ZAL ENGINEERING
MECHANICAL CONSULTANTS
99 PACIFIC ST, STE 375G
MONTEREY, CA 93940
TELEPHONE (831) 641-7739
JOB NO. 19046.00

REGISTERED PROFESSIONAL ENGINEER
JAIME DALDIVAR MARTINEZ
No. 37306
EXP. 3/31/25
MECHANICAL
STATE OF CALIFORNIA

OUR LADY OF ASSUMPTION CHURCH

100 SALINAS ROAD
PAJARO, CA, 95076

NO.	DESCRIPTION	DATE
1	.	.
2		
3		
4		
5		

ENGINEER BY:

DRAWN BY:

CHECKED BY:

SHEET NUMBER
P1.1

SHEET OF

THE USE OF THESE PLANS AND SPECIFICATIONS IS RESTRICTED TO THE ORIGINAL SITE FOR WHICH THEY WERE PREPARED, AND PUBLICATION THEREOF IS EXPRESSLY LIMITED TO SUCH USE. REPRODUCTION, IN WHOLE OR PART, OR PUBLICATION BY ANY METHOD OR PROCESS, IN WHOLE OR IN PART IS PROHIBITED. TITLE TO THESE PLANS AND SPECIFICATIONS REMAINS WITH THE ENGINEER AND VISUAL CONTACT WITH THEM CONSTITUTES PRIMA FACIE EVIDENCE OF THE ACCEPTANCE OF THESE RESTRICTIONS.

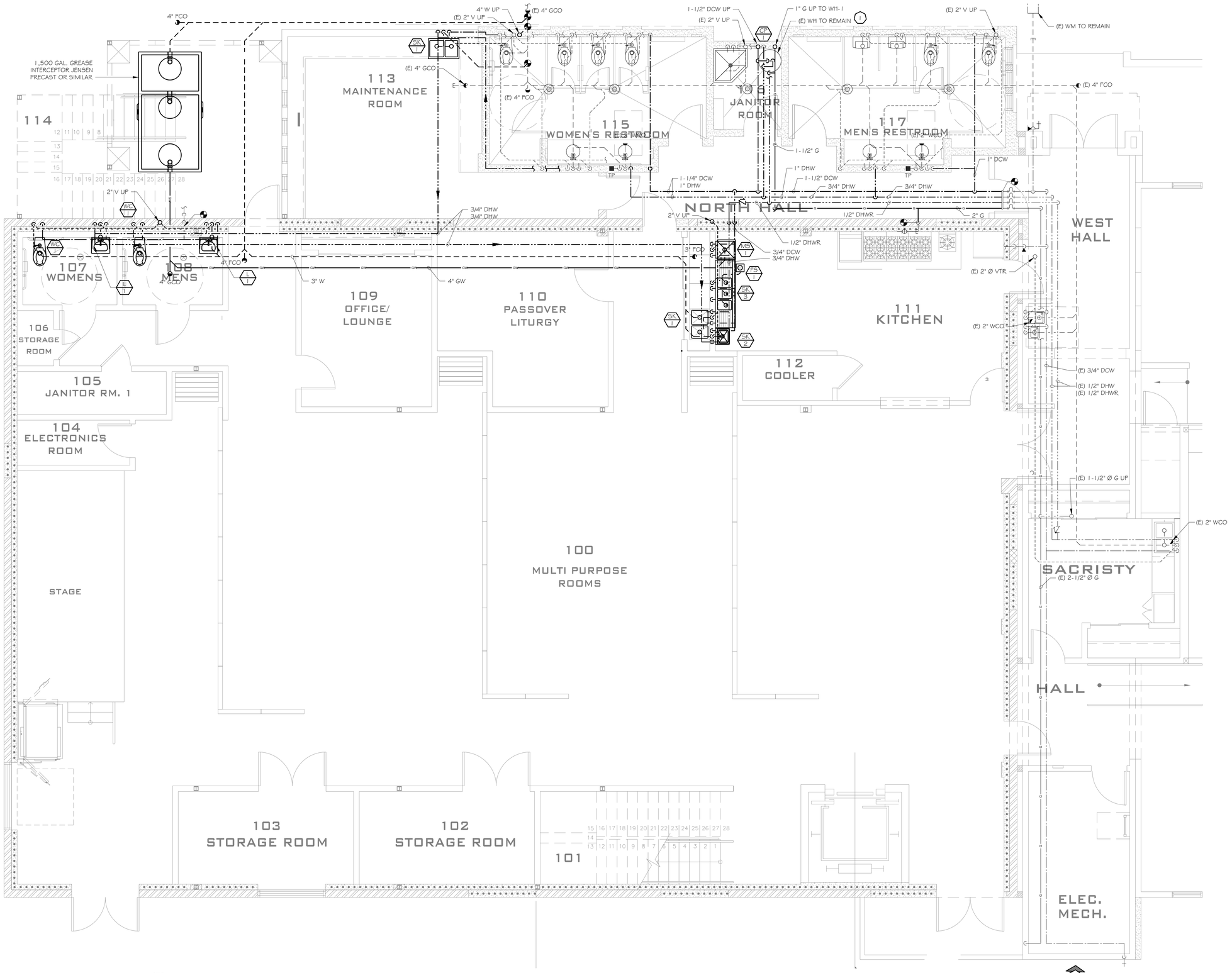

1 / P2.1 LOWER FLOOR PLAN - NEW PLUMBING
SCALE: 1/4"= 1'-0"

ZAL ENGINEERING

ZAL ENGINEERING
MECHANICAL CONSULTANTS
99 PACIFIC ST, STE 375G
MONTEREY, CA 93940
TELEPHONE (831) 641-7739
JOB NO. 19046.00

REGISTERED PROFESSIONAL ENGINEER
ZAHIR "SALDIVAR" MARTINEZ
No. 37306
EXP. 3/31/25
MECHANICAL
STATE OF CALIFORNIA

OUR LADY OF ASSUMPTION CHURCH

100 SALINAS ROAD
PAJARO, CA, 95076

NO.	DESCRIPTION	DATE
1	.	.
2		
3		
4		
5		

ENGINEER BY:

DRAWN BY:

CHECKED BY:

SHEET NUMBER
P2.1

SHEET OF

THE USE OF THESE PLANS AND SPECIFICATIONS IS RESTRICTED TO THE ORIGINAL SITE FOR WHICH THEY WERE PREPARED, AND PUBLICATION THEREOF IS EXPRESSLY LIMITED TO SUCH USE. RE-USE, REPRODUCTION OR PUBLICATION BY ANY METHOD IN WHOLE OR IN PART IS PROHIBITED. TITLE TO THE PLANS AND SPECIFICATIONS REMAINS WITH THE ENGINEER AND VISUAL CONTACT WITH THEM CONSTITUDES PRIMA FACIE EVIDENCE OF THE ACCEPTANCE OF THESE RESTRICTIONS.

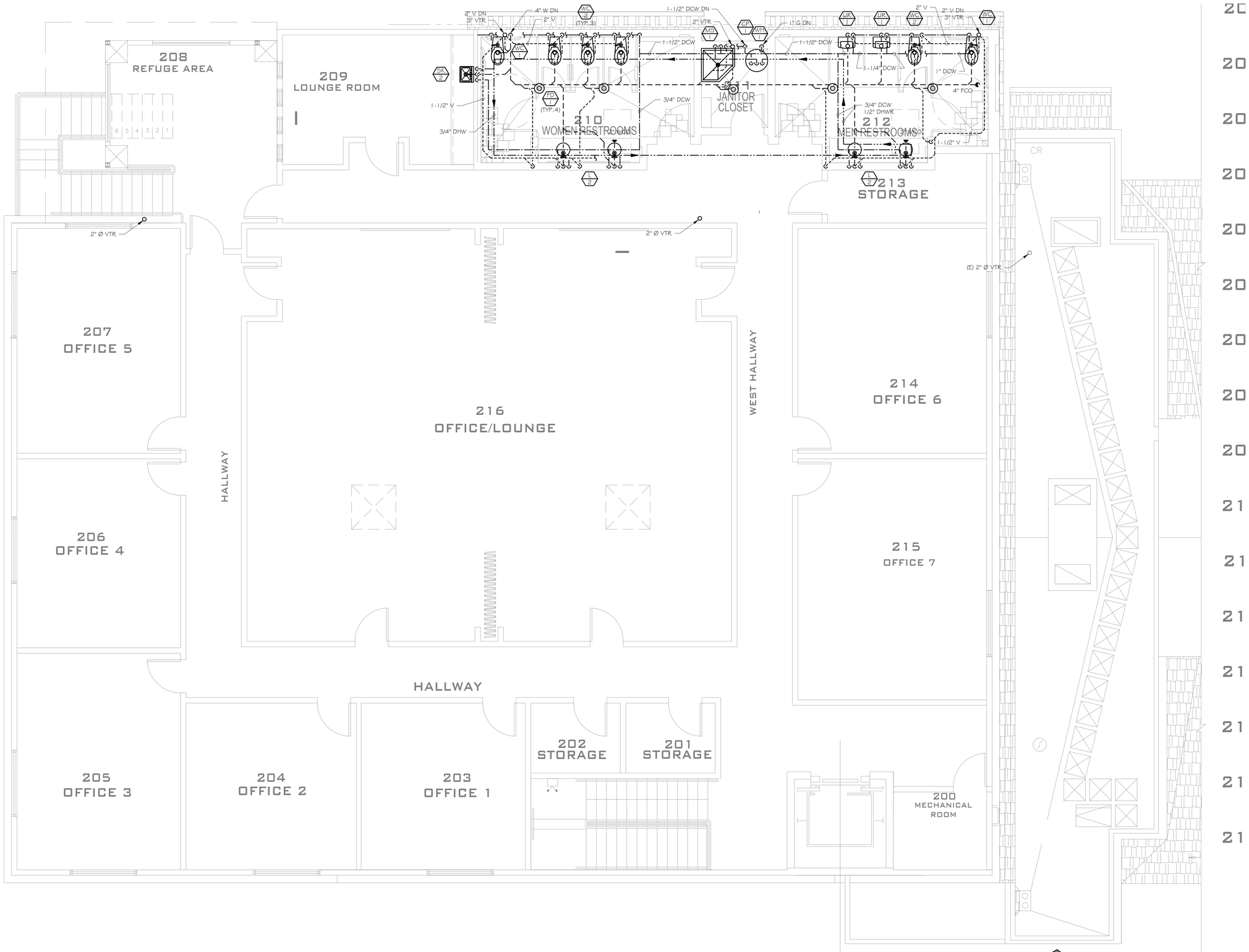

1 P2.2 UPPER FLOOR PLAN - NEW PLUMBING
SCALE: 1/4" = 1'-0"

0 1 2 4 8
SCALE: 1/4" = 1'-0"

ZAL ENGINEERING

ZAL ENGINEERING
MECHANICAL CONSULTANTS
99 PACIFIC ST, STE 375G
MONTEREY, CA 93940
TELEPHONE (831) 641-7739
JOB NO. 19046.00

REGISTERED PROFESSIONAL ENGINEER
JAIME BOLDIVAR MARTINEZ
No. 37306
EXP. 3/31/25
MECHANICAL
STATE OF CALIFORNIA

OUR LADY OF ASSUMPTION CHURCH

100 SALINAS ROAD
PAJARO, CA, 95076

NO.	DESCRIPTION	DATE
1	.	.
2		
3		
4		
5		

ENGINEER BY:

DRAWN BY:

CHECKED BY:

SHEET NUMBER
P2.2

SHEET OF

THE USE OF THESE PLANS AND SPECIFICATIONS IS RESTRICTED TO THE ORIGINAL SITE FOR WHICH THEY WERE PREPARED, AND PUBLICATION THEREOF IS EXPRESSLY LIMITED TO SUCH USE. RE-USE, REPRODUCTION OR PUBLICATION BY ANY METHOD IN WHOLE OR IN PART IS PROHIBITED. TITLE TO THE PLANS AND SPECIFICATIONS REMAINS WITH THE ENGINEER AND VISUAL CONTACT WITH THEM CONSTITUDES PRIMA FACIE EVIDENCE OF THE ACCEPTANCE OF THESE RESTRICTIONS.

STATE OF CALIFORNIA
HVAC DRY & WET SYSTEM REQUIREMENTS
CEC-NRCC-MCH-02-E (Revised 01/16) — CALIFORNIA ENERGY COMMISSION

CERTIFICATE OF COMPLIANCE	NRCC-MCH-02-E
HVAC Dry System Requirements	(Page 1 of 3)
Project Name: OUR LADY OF ASSUMPTION CHURCH	Date Prepared: 12.12.2019

A. Equipment Tags and System Description[1]- Dry Systems	OU-X, IU-X			
MANDATORY MEASURES	***T-24 Sections***	***Reference to the Requirements in the Contract Documents[2]***		
Heating Equipment Efficiency[3]	110.1 or 110.2(a)	M0.1		
Cooling Equipment Efficiency[3]	110.1 or 110.2(a)	M0.1		
HVAC or Heat Pump Thermostats	110.2(b), 110.2(c)	M2.1		
Furnace Standby Loss Control	110.2(d)			
Low Leakage AHUs	110.2(f)			
Ventilation[4]	120.1(b)			
Demand Control Ventilation[5]	120.1(c)4			
Occupant Sensor Ventilation Control[6]	120.1(c)5, 120.2(e)3			
Shutoff and Reset Controls[7]	120.2(e)			
Outdoor Air and Exhaust Damper Control	120.2(f)			
Isolation Zones	120.2(g)			
Automatic Demand Shed Controls	120.2(h)			
Economizer FDD	120.2(i)			
Duct Insulation	120.4			
PRESCRIPTIVE MEASURES				
Equipment is sized in conformance with 140.4 (a & b)	140.4(a & b)	◉ Yes ○ No	○ Yes ○ No	◉ Yes ◉ No
Supply Fan Pressure Control	140.4(c)			
Simultaneous Heat/Cool[8]	140.4(d)			
Economizer	140.4(e)	NA		
Heat and Cool Air Supply Reset	140.4(f)			
Electric Resistance Heating[9]	140.4(g)			
Duct Leakage Sealing and Testing.[10]	140.4(l)			

Notes:
1. *Provide equipment tags (e.g. AHU 1 to 10) and system description (e.g. Single Duct VAV reheat) as appropriate. Multiple units with common requirements can be grouped together.*
2. *Provide references to plans (i.e. Drawing Sheet Numbers) and/or specifications (including Section name/number and relevant paragraphs) where each requirement is specified. Enter "N/A" if the requirement is not applicable to this system.*
3. *The referenced plans and specifications must include all of the following information: equipment tag, equipment nominal capacity, Title 24 minimum efficiency requirements, and actual rated equipment efficiencies. Where multiple efficiency requirements are applicable (e.g. full- and part-load) include all. Where appliance standards apply (110.1), identify where equipment is required to be listed per Title 20 1601 et seq.*
4. *Identify where the ventilation requirements are documented for each central HVAC system. Include references to both central unit schedules and sequences of operation. If one or more spaces is naturally ventilated identify where this is documented in the plans and specifications. Multiple zone central air systems must also provide a MCH-03-E compliance document.*
5. *If one or more spaces has demand controlled ventilation identify where it is specified including the sensor specifications and the sequence of operation.*
6. *If one or more space has occupant sensor ventilation control identify where it is specified including the sensor specifications and the sequence of operation*
7. *If the system is DDC identify the sequences for the system start/stop, optimal start, setback (if required) and setup (if required). For all systems identify the specification for the thermostats and time clocks (if applicable).*
8. *Identify where the heating, cooling and deadband airflows are scheduled for this system. Include a reference to the specification of the zone controls. Provide a MCH-03-E compliance document.*
9. *Enter N/A if there is no electric heating. If the system has electric heating indicate which exception to 140.4(g) applies.*
10. *If duct leakage sealing and testing is required, a MCH-04-A compliance document must be submitted.*

STATE OF CALIFORNIA
MECHANICAL SYSTEMS
CEC-NRCC-MCH-01-E (Revised 01/16) — CALIFORNIA ENERGY COMMISSION

CERTIFICATE OF COMPLIANCE	NRCC-MCH-01-E
Mechanical Systems	Page 3 of 3
Project Name: OUR LADY OF ASSUMPTION CHURCH	Date Prepared: 12.12.2019

DOCUMENTATION AUTHOR'S DECLARATION STATEMENT

1. I certify that this Certificate of Compliance documentation is accurate and complete.

Documentation Author Name: Jaime Zaldivar, PE	Documentation Author Signature:
Company: ZAL Engineering, Inc.	Signature Date: 12.12.2019
Address: 99 Pacific St, Ste 375G	CEA/ HERS Certification Identification (if applicable):
City/State/Zip: Monterey, CA 93940	Phone: 831.641.7739

RESPONSIBLE PERSON'S DECLARATION STATEMENT

I certify the following under penalty of perjury, under the laws of the State of California:
1. The information provided on this Certificate of Compliance is true and correct.
2. I am eligible under Division 3 of the Business and Professions Code to accept responsibility for the building design or system design identified on this Certificate of Compliance (responsible designer).
3. The energy features and performance specifications, materials, components, and manufactured devices for the building design or system design identified on this Certificate of Compliance conform to the requirements of Title 24, Part 1 and Part 6 of the California Code of Regulations.
4. The building design features or system design features identified on this Certificate of Compliance are consistent with the information provided on other applicable compliance documents, worksheets, calculations, plans and specifications submitted to the enforcement agency for approval with this building permit application.
5. I will ensure that a completed signed copy of this Certificate of Compliance shall be made available with the building permit(s) issued for the building, and made available to the enforcement agency for all applicable inspections. I understand that a completed signed copy of this Certificate of Compliance is required to be included with the documentation the builder provides to the building owner at occupancy.

Responsible Designer Name: Jaime Zaldivar, PE	Responsible Designer Signature:
Company: ZAL Engineering, Inc.	Date Signed: 12.12.2019
Address: 99 Pacific St, Ste 375G	License: M37306
City/State/Zip: Monterey, CA 93940	Phone: 831.641.7739

STATE OF CALIFORNIA
MECHANICAL SYSTEMS
CEC-NRCC-MCH-01-E (Revised 01/16) — CALIFORNIA ENERGY COMMISSION

CERTIFICATE OF COMPLIANCE	NRCC-MCH-01-E
Mechanical Systems	Page 2 of 3
Project Name: OUR LADY OF ASSUMPTION CHURCH	Date Prepared: 12.12.2019

C. MECHANICAL HVAC ACCEPTANCE FORMS (check box for required compliance documents)

Test Performed By:
Designer:
This compliance document is to be used by the designer and attached to the plans. Listed below are all the acceptance tests for HVAC systems. The designer is required to check the applicable boxes for all acceptance tests that apply and list all equipment that requires an acceptance test. All equipment of the same type that requires a test, list the equipment description and the number of systems.
Installing Contractor:
The contractor who installed the equipment is responsible to either conduct the acceptance test themselves or have a qualified entity run the test for them. If more than one person has responsibility for the acceptance testing, each person shall sign and submit the Certificate of Acceptance applicable to the portion of the construction or installation for which they are responsible.
Enforcement Agency:
Plancheck - The NRCC-MCH-01-E compliance document is not considered a completed document and is not to be accepted by the building department unless the correct boxes are checked.
Inspector - Before occupancy permit is granted all newly installed process systems must be tested to ensure proper operations.

Test Description		MCH-12-A	MCH-13-A	MCH-14-A	MCH-15-A	MCH-16-A	MCH-17-A	MCH-18-A
Equipment Requiring Testing or Verification	# of Units	Fault Detection & Diagnostics for DX Units	Automatic Fault Detection & Diagnostics for Air & Zone	Distributed Energy Storage DX AC Systems	Thermal Energy Storage (TES) Systems	Supply Air Temperature Reset Controls	Condenser Water Reset Controls	ECMS
OU-X	3	☑	☐	☐	☐	☐	☐	☐

Add Row | Remove Last

STATE OF CALIFORNIA
MECHANICAL SYSTEMS
CEC-NRCC-MCH-01-E (Revised 01/16) — CALIFORNIA ENERGY COMMISSION

CERTIFICATE OF COMPLIANCE	NRCC-MCH-01-E
Mechanical Systems	Page 1 of 3
Project Name: OUR LADY OF ASSUMPTION CHURCH	Date Prepared: 12.12.2019

A. MECHANICAL COMPLIANCE DOCUMENTS & WORKSHEETS (check box if worksheet is included)
For detailed instructions on the use of this and all Energy Efficiency Standards compliance forms, refer to the 2016 Nonresidential Manual
Note: The Enforcement Agency may require all forms to be incorporated onto the building plans.

YES	NO	Comp. Doc./Worksheet #	Title
◉	○	NRCC-MCH-01-E (Part 1 of 3)	Certificate of Compliance, Declaration. Required on plans for all submittals.
◉	○	NRCC-MCH-01-E (Part 2 of 3)	Certificate of Compliance, Required Acceptance Tests (MCH-02-A to 11-A). Required on plans for all submittals.
◉	○	NRCC-MCH-01-E (Part 3 of 3)	Certificate of Compliance, Required Acceptance Tests (MCH-12-A to 18-A). Required on plans where applicable.
○	◉	NRCC-MCH-02-E (Part 1 of 2)	Mechanical Dry Equipment Summary is required for all submittals with Central Air Systems. It is optional on plans.
○	◉	NRCC-MCH-02-E (Part 2 of 2)	Mechanical Wet Equipment Summary is required for all submittals with chilled water, hot water or condenser water systems. It is optional on plans.
○	◉	NRCC-MCH-03-E	Mechanical Ventilation and Reheat is required for all submittals with multiple zone heating and cooling systems. It is optional on plans.
○	◉	NRCC-MCH-07-E (Part 1 of 2)	Power Consumption of Fans. Required on plans where applicable
○	◉	NRCC-MCH-07-E (Part 2 of 2)	Power Consumption of Fans, Declaration. Required on plans where applicable

B. MECHANICAL HVAC ACCEPTANCE FORMS (check box for required compliance documents)

Test Performed By:
Designer:
This compliance document is to be used by the designer and attached to the plans. Listed below are all the acceptance tests for HVAC systems. The designer is required to check the applicable boxes for all acceptance tests that apply and list all equipment that requires an acceptance test. All equipment of the same type that requires a test, list the equipment description and the number of systems.
Installing Contractor:
The contractor who installed the equipment is responsible to either conduct the acceptance test themselves or have a qualified entity run the test for them. If more than one person has responsibility for the acceptance testing, each person shall sign and submit the Certificate of Acceptance applicable to the portion of the construction or installation for which they are responsible.
Enforcement Agency:
Plancheck - The NRCC-MCH-01-E compliance document is not considered a completed document and is not to be accepted by the building department unless the correct boxes are checked.
Inspector - Before occupancy permit is granted all newly installed process systems must be tested to ensure proper operations.

Test Description		MCH-02-A	MCH-03-A	MCH-04-A	MCH-05-A	MCH-06-A	MCH-07-A	MCH-08-A	MCH-09-A	MCH-10-A	MCH-11-A
Equipment Requiring Testing or Verification	# of Units	Outdoor Air	Single Zone Unitary	Air Distribution Ducts	Economizer Controls	Demand Controlled Ventilation (DCV)	Supply Fan VAV	Valve Leakage Test	Supply Water Temp. Reset	Hydronic System Variable Flow Control	Automatic Demand Shed Control
IU-X,X	3	☑	☐	☑	☐	☐	☐	☐	☐	☐	☐

Add Row | Remove Last

STATE OF CALIFORNIA
ENVELOPE COMPONENT APPROACH
CEC-NRCC-ENV-01-E (Revised 01/16) — CALIFORNIA ENERGY COMMISSION

CERTIFICATE OF COMPLIANCE	NRCC-ENV-01-E
Envelope Component Approach	Page 5 of 5
Project Name: OUR LADY OF ASSUMPTION CHURCH	Date Prepared: 12.12.2019

DOCUMENTATION AUTHOR'S DECLARATION STATEMENT

1. I certify that this Certificate of Compliance documentation is accurate and complete.

Documentation Author Name: Jaime Zaldivar, PE	Documentation Author Signature:
Company: ZAL Engineering, Inc.	Signature Date: 12.12.2019
Address: 99 Pacific St, Ste 375G	CEA/ HERS Certification Identification (if applicable):
City/State/Zip: Monterey, CA 93940	Phone: 831.641.7739

RESPONSIBLE PERSON'S DECLARATION STATEMENT

I certify the following under penalty of perjury, under the laws of the State of California:
1. The information provided on this Certificate of Compliance is true and correct.
2. I am eligible under Division 3 of the Business and Professions Code to accept responsibility for the building design or system design identified on this Certificate of Compliance (responsible designer).
3. The energy features and performance specifications, materials, components, and manufactured devices for the building design or system design identified on this Certificate of Compliance conform to the requirements of Title 24, Part 1 and Part 6 of the California Code of Regulations.
4. The building design features or system design features identified on this Certificate of Compliance are consistent with the information provided on other applicable compliance documents, worksheets, calculations, plans and specifications submitted to the enforcement agency for approval with this building permit application.
5. I will ensure that a completed signed copy of this Certificate of Compliance shall be made available with the building permit(s) issued for the building, and made available to the enforcement agency for all applicable inspections. I understand that a completed signed copy of this Certificate of Compliance is required to be included with the documentation the builder provides to the building owner at occupancy.

Responsible Designer Name: Jaime Zaldivar, PE	Responsible Designer Signature:
Company: ZAL Engineering, Inc.	Date Signed: 12.12.2019
Address: 99 Pacific St, Ste 375G	License: M37306
City/State/Zip: Monterey, CA 93940	Phone: 831.641.7739

STATE OF CALIFORNIA
ENVELOPE COMPONENT APPROACH
CEC-NRCC-ENV-01-E (Revised 01/16) — CALIFORNIA ENERGY COMMISSION

CERTIFICATE OF COMPLIANCE	NRCC-ENV-01-E
Envelope Component Approach	Page 4 of 5
Project Name: OUR LADY OF ASSUMPTION CHURCH	Date Prepared: 12.12.2019

H. ENVELOPE MANDATORY MEASURES

Indicate location on building plans of Mandatory Envelope Measures Note Block: _____

INSTRUCTIONS TO APPLICANT ENVELOPE COMPLIANCE & WORKSHEETS (check box if worksheet are included)

For detailed instructions on the use of this and all Energy Efficiency Standards compliance documents, please refer to the Energy Commission website.

- ☑ NRCC-ENV-01-E Certificate of Compliance. Required on plans for all submittals.
- ☐ NRCC-ENV-04-E Use when minimum skylight requirements for large enclosed spaces are required in climate zones 2 through 15. Optional on plans.

STATE OF CALIFORNIA
ENVELOPE COMPONENT APPROACH
CEC-NRCC-ENV-01-E (Revised 01/16) — CALIFORNIA ENERGY COMMISSION

CERTIFICATE OF COMPLIANCE	NRCC-ENV-01-E
Envelope Component Approach	Page 3 of 5
Project Name: OUR LADY OF ASSUMPTION CHURCH	Date Prepared: 12.12.2019

F. AIR BARRIER

01	02	03	04	05
Name	Air Barrier Material Type	Air Barrier Assembly Type	Whole Building Air Leakage Testing	Comments

Add Row | Remove Last

G. FENESTRATION PROPOSED AREAS AND EFFICIENCIES

01	02	03	04	05	06	07	08	09	10	11	12
Proposed											
Tag/ID	Fenestration Type	Surface Area	Orientation	# of Panes	Max U-Factor	Max (R)SHGC	Min VT	Label	Overhang	Condition Status	Comments
	WINDOW	79.02	East	2	0.32	0.25	0.42			NEW	
	WINDOW	152.25	West	2	0.32	0.25	0.42			NEW	
	WINDOW	106.75	South	2	0.32	0.25	0.42			NEW	
	DOOR	94.68	South	2	0.32	0.25	0.42			NEW	
	SKYLIGHT	64	Roof	2	0.32	0.25	0.42			NEW	

Add Row | Remove Last

STATE OF CALIFORNIA
ENVELOPE COMPONENT APPROACH
CEC-NRCC-ENV-01-E (Revised 01/16) — CALIFORNIA ENERGY COMMISSION

CERTIFICATE OF COMPLIANCE	NRCC-ENV-01-E
Envelope Component Approach	Page 2 of 5
Project Name: OUR LADY OF ASSUMPTION CHURCH	Date Prepared: 12.12.2019

01	02	03	04	05	06	07	08		09	10	11
							Appendix JA4 Reference				
Tag/ID	Mass Type	Density (lb/ft³)	Mass Thickness (inches)	Furring Strip Thickness (inches)	Interior Insulation R-Value	Exterior Insulation R-Value	Table	Cell	Proposed U-Factor	Required U-Factor from Tables 140.3-B, C, or D	Field Inspection Comments

Add Row | Remove Last

E. ROOFING PRODUCTS (COOL ROOF)

01	02	03	04	05	06	07	08	09	10	11
				Proposed			Minimum Required			
Mass Roof 25 lb/ft² or Greater	Roof Pitch	CRRC Product ID Number	Product Type	Aged Solar Reflectance[1]	Thermal Emittance	SRI[2] (Optional)	Aged Solar Reflectance	Thermal Emittance	SRI (Optional)	Comments
☐				☐						EXCEPTION 1 to Section 140.3(a)1Aia

Add Row | Remove Last

- An aged solar reflectance less than 0.63 is allowed provided the maximum roof/ceiling U-factor in TABLE 140.3 is not exceeded	
- High-rise residential buildings and Hotels and Motels with low-sloped roofs in Climate Zones 1 through 8, 12, and 16 are exempted from aged Solar Reflectance and thermal emittance requirements	
- High-rise residential and Hotels/Motels with steep-sloped roofs in Climate Zones 1 and 16 are exempt from aged Solar Reflectance and thermal emittance requirements	
- The roof area covered by building integrated photovoltaic panels and building integrated solar thermal panels are exempt from aged Solar Reflectance and thermal emittance requirements	
- To apply Liquid Field Applied Coatings, the coating must be applied across the entire roof surface and meet the dry mil thickness or coverage recommended by the coatings manufacturer and meet minimum performance requirements listed in §110.8(i)4. Select the applicable coating:	
☐ Aluminum-Pigmented Asphalt Roof Coating ☐ Cement-Based Roof Coating ☐ Other	

NOTES:
1. Check the box if the aged Solar Reflectance was not available in the Cool Roof Council's Rated Product Directory, then use the equation in Section 110.8(i)2: $\rho_{aged} = 0.2 + 0(\rho_{initial} - 0.2)$ to obtain a calculated aged solar reflectance value. Where $\rho_{initial}$ is the Initial Solar Reflectance found in the directory and 0 is either 0.65 for Field applied coatings or 0.70 for all other roofing products other than Field-Applied Coating.
2. Calculate the SRI Value by using the SRI-Worksheet and enter the resulting value in the SRI column above and attach a copy of the SRI-Worksheet (NRCC-ENV-03-E) to this compliance document.

STATE OF CALIFORNIA
ENVELOPE COMPONENT APPROACH
CEC-NRCC-ENV-01-E (Revised 01/16) — CALIFORNIA ENERGY COMMISSION

CERTIFICATE OF COMPLIANCE	NRCC-ENV-01-E
Envelope Component Approach	Page 1 of 5
Project Name: OUR LADY OF ASSUMPTION CHURCH	Date Prepared: 12.12.2019

A. GENERAL INFORMATION

01	Project Location:	100 SALINAS RD	06	Compliance Method:	☑ Component ☐ Unconditioned (file Affidavit)
02	CA City and Zip Code:	PAJARO 95076	07	Building Front Orientation:	WEST
03	Climate Zone:	3	08	Phase of Construction:	☐ New Construction ☑ Additions ☑ Alteration
04	Total Conditioned Floor Area:	12690	09	Building Occupancy:	☑ Nonresidential ☐ High Rise Residential ☐ Hotel/Motel Guest Room
05	Building Type:	☐ Schools (Public Schools) ☐ Relocatable Public School Building ☑ Conditioned Spaces ☐ Unconditioned Spaces ☐ Skylight Area for Large Enclosed Space > 5000 ft² (If checked, include the NRCC-ENV-04-E with submittal)			

B. ENVELOPE DETAILS - FRAMED

01	02	03	04	05	06	07	08		09	10	11
							Appendix JA4 Reference				
Tag/ID	Assembly Type	Frame Material	Frame Depth	Frame Spacing	Cavity R-value	Continuous Insulation R-value	Table	Cell	Proposed U-Factor	Required U-Factor from Tables 140.3-B, C, or D	Field Inspection Comments
W	Wall	Wood	4	16	13	0	4.3.1	21A	0.098	0.11	
R	Roof	Wood	14	24	30	0	4.2.2	41A	0.033	0.034	

Add Row | Remove Last

C. ENVELOPE DETAILS - NON-FRAMED

01	02	03	04	05	06	07		08	09	10
						Appendix JA4 Reference				
Tag/ID	Assembly Type	Assembly Materials	Thickness (inches)	Interior or Core Insulation R-Value	Continuous Insulation R-Value	Table	Cell	Proposed U-Factor	Required U-Factor from Tables 140.3-B, C, or D	Field Inspection Comments

Add Row | Remove Last

D. ENVELOPE DETAILS - MASS

ZAL ENGINEERING
MECHANICAL CONSULTANTS
99 PACIFIC ST, STE 375G
MONTEREY, CA 93940
TELEPHONE (831) 641-7739
JOB NO. 19046.00

REGISTERED PROFESSIONAL ENGINEER — JAIME ZALDIVAR MARTINEZ — No. 37306 EXP. 3/31/23 — MECHANICAL — STATE OF CALIFORNIA

OUR LADY OF ASSUMPTION CHURCH
100 SALINAS ROAD
PAJARO, CA, 95076

NO.	DESCRIPTION	DATE
1		
2		
3		
4		
5		

ENGINEER BY:
DRAWN BY:
CHECKED BY:
SHEET NUMBER
T24.1
SHEET OF

THE USE OF THESE PLANS AND SPECIFICATIONS IS RESTRICTED TO THE ORIGINAL SITE FOR WHICH THEY WERE PREPARED, AND PUBLICATION THEREOF IS EXPRESSLY LIMITED TO SUCH USE. REUSE, REPRODUCTION OR PUBLICATION BY ANY METHOD OR PROCESS, IN WHOLE OR IN PART, IS PROHIBITED. TITLE TO THE PLANS AND SPECIFICATIONS REMAINS WITH THE ENGINEER AND VISUAL CONTACT WITH THEM CONSTITUTES PRIMA FACIE EVIDENCE OF THE ACCEPTANCE OF THESE RESTRICTIONS.

STATE OF CALIFORNIA
PLUMBING
CEC-NRCI-PLB-01-E (Revised 01/16) CALIFORNIA ENERGY COMMISSION

CERTIFICATE OF INSTALLATION		NRCI-PLB-01-E
Plumbing		(Page 4 of 4)
Project Name:	Enforcement Agency:	Permit Number:
Project Address:	City:	Zip Code:

DOCUMENTATION AUTHOR'S DECLARATION STATEMENT

1. I certify that this Certificate of Installation documentation is accurate and complete.

Documentation Author Name:	Documentation Author Signature:
Documentation Author Company Name:	Date Signed:
Address:	CEA/ HERS Certification Identification (if applicable):
City/State/Zip:	Phone:

RESPONSIBLE PERSON'S DECLARATION STATEMENT

I certify the following under penalty of perjury, under the laws of the State of California:

1. The information provided on this Certificate of Installation is true and correct.
2. I am eligible under Division 3 of the Business and Professions Code in the applicable classification to accept responsibility for the system design, construction, or installation of features, materials, components, or manufactured devices for the scope of work identified on this Certificate of Installation and attest to the declarations in this statement (responsible builder/installer), otherwise I am an authorized representative of the responsible builder/installer.
3. The constructed or installed features, materials, components or manufactured devices (the installation) identified on this Certificate of Installation conforms to all applicable codes and regulations, and the installation conforms to the requirements given on the plans and specifications approved by the enforcement agency.
4. I reviewed a copy of the Certificate of Compliance approved by the enforcement agency that identifies the specific requirements for the scope of construction or installation identified on this Certificate of Installation, and I have ensured that the requirements that apply to the construction or installation have been met.
5. I will ensure that a completed signed copy of this Certificate of Installation shall be posted, or made available with the building permit(s) issued for the building, and made available to the enforcement agency for all applicable inspections. I understand that a completed signed copy of this Certificate of Installation is required to be included with the documentation the builder provides to the building owner at occupancy.

Responsible Builder/Installer Name:	Responsible Builder/Installer Signature:	
Company Name: (Installing Subcontractor or General Contractor or Builder/Owner)	Position With Company (Title):	
Address:	CSLB License:	
City/State/Zip:	Phone:	Date Signed:

STATE OF CALIFORNIA
PLUMBING
CEC-NRCI-PLB-01-E (Revised 01/16) CALIFORNIA ENERGY COMMISSION

CERTIFICATE OF INSTALLATION		NRCI-PLB-01-E
Plumbing		(Page 3 of 4)
Project Name:	Enforcement Agency:	Permit Number:
Project Address:	City:	Zip Code:

D. MANDATORY MEASURES FOR ALL SINGLE DWELLING HOT WATER DISTRIBUTION SYSTEMS

01	Equipment shall meet the applicable requirements of the Appliance Efficiency Regulations (Section 110.3(b)1).
02	Unfired Storage Tanks are insulated with an external R-12 or combination of R-16 internal and external Insulation. (Section 110.3(c)4).
03	The following pipes are insulated, to the thicknesses required by Table 120.3A, except for those sections of pipe that are subject to one of the exceptions below: (RA4.4.1) • The first 5 feet (1.5 meters) of hot and cold water pipes from the storage tank. • All piping with a nominal diameter of 3/4 inch (19 millimeter) or larger. • All piping associated with a domestic hot water recirculation system regardless of the pipe diameter, except when cold water return is used in a demand system. • Piping from the heating source to storage tank or between tanks. • Piping buried below grade. • All hot water pipes from the heating source to the kitchen fixtures. The following sections of pipe do not have to be insulated: (RA4.4.1) • Piping installed in interior or exterior walls that is surrounded on all sides by at least 1 inch of insulation. • Piping installed in attics with a minimum of 4 inches (10 cm) of attic insulation on top • Piping that penetrates framing members shall not be required to have pipe insulation for the distance of the framing penetration. Metal piping that penetrates metal framing shall use grommets, plugs, wrapping or other insulating material to assure that no contact is made with the metal framing. Insulation shall butt securely against all framing members.
04	Piping buried below grade must be installed in a water proof and non-crushable casing or sleeve that allows for installation, removal, and replacement of the enclosed pipe and insulation. (Section 150.0(j))
05	All elbows and tees shall be fully insulated. (RA4.4.1)
06	Where insulation is required, no piping shall be visible due to insulation voids, and all insulation shall fit tightly to the pipe. (RA4.4.1)
07	**For Gas or Propane Water Heaters:** Ensure the following are installed (Section 150.0(n)) 1. A 120V electrical receptacle is within 3 feet from the water heater and accessible with no obstructions 2. A Category III or IV vent, or a Type B vent with straight pipe between outside and water heater 3. A condensate drain no more than 2 inches higher than the base on water heater for natural draining 4. A gas supply line with capacity of at least 200,000 Btu/hr

The responsible person's signature on this compliance document affirms that all applicable requirements in this table have been met.

STATE OF CALIFORNIA
PLUMBING
CEC-NRCI-PLB-01-E (Revised 01/16) CALIFORNIA ENERGY COMMISSION

CERTIFICATE OF INSTALLATION		NRCI-PLB-01-E
Plumbing		(Page 2 of 4)
Project Name:	Enforcement Agency:	Permit Number:
Project Address:	City:	Zip Code:

C. MANDATORY REQUIREMENTS FOR ALL CENTRAL DOMESTIC HOT WATER RECIRCULATION SYSTEMS

01	On systems that have a total capacity greater than 167,000 Btu/hr, outlets that require higher than service water temperatures as listed in the ASHRAE Handbook have separate remote heaters, heat exchangers, or boosters to supply the outlet with the higher temperature. (Section 110.3 (c)1)
02	Systems with circulating pumps or with electrical heat trace systems shall be capable of automatically turning off the system. (Section 110.3(c)2).
03	For public lavatories, the control system shall limit the outlet temperature to 110°F. (Section 110.3(c)3).
04	Unfired storage tanks are insulated with an external R-12 or combination of R-16 internal and external Insulation. Alternatively, the heat loss of the tank surface based on an 80°F water-air temperature difference shall be less than 6.5 Btu per hour per square foot. (Section 110.3(c)4).
05	All sections of the recirculation loop, and the first 5 feet of all branches off the loop are insulated, to the thicknesses required by Table 120.3A, except for the following: (RA4.4.1) • Piping installed in interior or exterior walls that is surrounded on all sides by at least 1inch of insulation. • Piping installed in attics with a minimum of 4 inches (10 cm) of attic insulation on top. • Piping that penetrates framing members shall not be required to have pipe insulation for the distance of the framing penetration. Metal piping that penetrates metal framing shall use grommets, plugs, wrapping or other insulating material to assure that no contact is made with the metal framing. Insulation shall butt securely against all framing members. • Insulation is not required on the cold water line when it is used as the return.
06	Hot water pipes that are buried below grade are installed in a water proof and non-crushable casing or sleeve that allows for installation, removal, and replacement of the enclosed pipe and insulation. (RA4.4.1)
07	Insulation outside conditioned space is protected from damage, including that due to sunlight, moisture, equipment maintenance, and wind. (RA4.4.1)
08	Pipe insulation fits tightly to the pipe. (RA4.4.1)
09	On insulated sections of pipe, no piping is visible due to insulation voids, and all elbows and tees are fully insulated. (RA4.4.1)
10	The recirculation pump is mounted on a vertical section of the return line, OR an automatic air release valve is installed on a riser at least 12 inches in length, on the inlet side of the recirculation pump, no more than 4 feet from the pump. (Section 110.3(c)5A).
11	A check valve is located between the recirculation pump and the water heater. (Section 110.3(c)5B).
12	A hose bibb is installed between the pump and the water heating equipment with an isolation valve between the hose bibb and the water heating equipment. (Section 110.3(c)5C).
13	Isolation valves are installed on both sides of the pump. One of the isolation valves may be the same isolation valve as in item 12 above. (Section 110.3(c)5D).
14	The cold water supply piping and the recirculation loop piping is not connected to the hot water storage tank drain port. (Section 110.3(c)5E).
15	A check valve is installed on the cold water supply line between the hot water system and the next closest tee on the cold water supply. (Section 110.3(c)5F).
16	The hot water distribution system piping from the water heater(s) to the fixtures and appliances takes the most direct path. (RA 4.4.7.1)
17	Installation and operation instructions that provide details of the operation of the pump and controls are available at the jobsite for inspection. (RA 4.4.7.1)
18	More than one circulation loop may be installed. Each loop shall have its own pump and controls. (RA4.4.8, RA 4.4.9, RA 4.4.10)

The responsible person's signature on this compliance document affirms that all applicable requirements in this table have been met.

STATE OF CALIFORNIA
PLUMBING
CEC-NRCI-PLB-01-E (Revised 01/16) CALIFORNIA ENERGY COMMISSION

CERTIFICATE OF INSTALLATION		NRCI-PLB-01-E
Plumbing		(Page 1 of 4)
Project Name:	Enforcement Agency:	Permit Number:
Project Address:	City:	Zip Code:

A. GENERAL INFORMATION

DATE OF BUILDING PERMIT:			
BUILDING TYPE	☐ Nonresidential	☐ High-Rise Residential	☐ Hotel/Motel
PHASE OF CONSTRUCTION	☐ New Construction	☐ Addition	☐ Alteration

If more than one person has responsibility for building construction, each person shall prepare and sign an Installation Certificate document applicable to the portion of construction for which they are responsible; alternatively, the person with chief responsibility for construction shall prepare and sign the Installation Certificate document(s) for the entire construction.

B. SCOPE OF RESPONSIBILITY

Date of approval by the enforcement agency of the Certificate of Compliance that provides the specifications for this Installation Certificate.	Date:

In the table below identify all applicable construction documents that specify the features, materials, components, manufactured devices, or system performance diagnostic results required for the scope of responsibility for this Installation Certificate.

Document Title or Description	Applicable Sheets or Pages, Tables, Schedules, etc.	Date Approved By the Enforcement Agency

STATE OF CALIFORNIA
WATER HEATING SYSTEM GENERAL INFORMATION
CEC-NRCC-PLB-01-E (Revised 01/16) CALIFORNIA ENERGY COMMISSION

CERTIFICATE OF COMPLIANCE	NRCC-PLB-01-E
Water Heating System General Information	(Page 2 of 2)
Project Name: OUR LADY OF ASSUMPTION CHURCH	Date Prepared: 12.12.2019

DOCUMENTATION AUTHOR'S DECLARATION STATEMENT

1. I certify that this Certificate of Compliance documentation is accurate and complete.

Documentation Author Name: Jaime Zaldivar, PE	Documentation Author Signature:
Company: ZAL Engineering, Inc.	Signature Date: 12.12.2019
Address: 99 Pacific St, Ste 375G	CEA/ HERS Certification Identification (if applicable):
City/State/Zip: Monterey, CA 93940	Phone: 831.641.7739

RESPONSIBLE PERSON'S DECLARATION STATEMENT

I certify the following under penalty of perjury, under the laws of the State of California:

1. The information provided on this Certificate of Compliance is true and correct.
2. I am eligible under Division 3 of the Business and Professions Code to accept responsibility for the building design or system design identified on this Certificate of Compliance (responsible designer).
3. The energy features and performance specifications, materials, components, and manufactured devices for the building design or system design identified on this Certificate of Compliance conform to the requirements of Title 24, Part 1 and Part 6 of the California Code of Regulations.
4. The building design features or system design features identified on this Certificate of Compliance are consistent with the information provided on other applicable compliance documents, worksheets, calculations, plans and specifications submitted to the enforcement agency for approval with this building permit application.
5. I will ensure that a completed signed copy of this Certificate of Compliance shall be made available with the building permit(s) issued for the building, and made available to the enforcement agency for all applicable inspections. I understand that a completed signed copy of this Certificate of Compliance is required to be included with the documentation the builder provides to the building owner at occupancy.

Responsible Designer Name: Jaime Zaldivar, PE	Responsible Designer Signature:	
Company : ZAL Engineering, Inc.	Date Signed: 12.12.2019	
Address: 99 Pacific St, Ste 375G	License: M37306	
City/State/Zip: Monterey, CA 93940	Phone: 831.641.7739	

STATE OF CALIFORNIA
WATER HEATING SYSTEM GENERAL INFORMATION
CEC-NRCC-PLB-01-E (Revised 01/16) CALIFORNIA ENERGY COMMISSION

CERTIFICATE OF COMPLIANCE	NRCC-PLB-01-E
Water Heating System General Information	(Page 1 of 2)
Project Name: OUR LADY OF ASSUMPTION CHURCH	Date Prepared: 12.12.2019

A. GENERAL INFORMATION/SYSTEM INFORMATION

01	Water Heater System Name:	WH-1
02	Water Heater System Configuration:	Single Dwelling Unit
03	Water Heater System Type:	Domestic Hot Water
04	Building Type:	Nonresidential
05	Total Number of Water Heaters in Systems:	1 (NEW), 1 (EXISTING)
06	Central DHW Distribution Type:	Recirculation Continuous Monitoring Systems
07	Dwelling Unit DHW Distribution Type:	

B. WATER HEATER INFORMATION

Each water heater type requires a separate compliance document.

01	Water Heater Type:	Small Storage - Gas
02	Fuel Type:	Gas
03	Manufacture Name:	A. O. SMITH
04	Model Number:	BTS150
05	Number of Identical Water Heaters:	1
06	Installed Water Heater System Efficiency:	0.95
07	Required Minimum Efficiency:	0.78
08	Standby Loss Percent or Standby Loss Total:	
09	Rated Input:	150,000 BTU/H
10	Pilot Energy:	
11	Water Heater Tank Storage Volume:	50 GAL.
12	Exterior Insulation on Water Heater:	
13	Volume of Supplemental Storage:	
14	Internal Insulation on Supplemental Storage:	
15	Exterior Insulation on Supplemental Storage:	

C. PLUMBING COMPLIANCE FORMS & WORKSHEETS

Check box if worksheet is included.

For detailed instructions on the use of this and all Energy Standards compliance documents, refer to the 2016 Nonresidential Manual
Note: The Enforcement Agency may require all compliance documents to be incorporated onto the building plans.

YES	NO	Doc/Worksheet #	Title
◉	○	NRCC-PLB-01-E	Certificate of Compliance, Declaration. Required on plans for all submittals.
◉	○	NRCI-PLB-01-E	Certificate of Installation. Required on plans for all submittals.
○	◉	NRCI-PLB-02-E	Certificate of Installation, required on central systems in high-rise residential, hotel/motel application.
○	◉	NRCI-PLB-03-E	Certificate of Installation, required on single dwelling unit systems in high-rise residential, hotel/motel application.
○	◉	NRCI-PLB-21-H	Certificate of Installation, required on HERS verified central systems in high-rise residential, hotel/motel application.
○	◉	NRCI-PLB-22-H	Certificate of Installation, required on HERS verified single dwelling unit systems in high-rise residential, hotel/motel application.
○	◉	NRCI-STH-01-E	Certificate of Installation, required on any solar water heating

STATE OF CALIFORNIA
HVAC SYSTEM REQUIREMENTS
CEC-NRCC-MCH-02-E (Revised 01/16) CALIFORNIA ENERGY COMMISSION

CERTIFICATE OF COMPLIANCE	NRCC-MCH-02-E
HVAC Wet System Requirements	(Page 3 of 3)
Project Name: OUR LADY OF ASSUMPTION CHURCH	Date Prepared: 12.12.2019

DOCUMENTATION AUTHOR'S DECLARATION STATEMENT

1. I certify that this Certificate of Compliance documentation is accurate and complete.

Documentation Author Name: Jaime Zaldivar, PE	Documentation Author Signature:
Company: ZAL Engineering, Inc.	Signature Date: 12.12.2019
Address: 99 Pacific St, Ste 375G	CEA/ HERS Certification Identification (if applicable):
City/State/Zip: Monterey, CA 93940	Phone: 831.641.7739

RESPONSIBLE PERSON'S DECLARATION STATEMENT

I certify the following under penalty of perjury, under the laws of the State of California:

1. The information provided on this Certificate of Compliance is true and correct.
2. I am eligible under Division 3 of the Business and Professions Code to accept responsibility for the building design or system design identified on this Certificate of Compliance (responsible designer).
3. The energy features and performance specifications, materials, components, and manufactured devices for the building design or system design identified on this Certificate of Compliance conform to the requirements of Title 24, Part 1 and Part 6 of the California Code of Regulations.
4. The building design features or system design features identified on this Certificate of Compliance are consistent with the information provided on other applicable compliance documents, worksheets, calculations, plans and specifications submitted to the enforcement agency for approval with this building permit application.
5. I will ensure that a completed signed copy of this Certificate of Compliance shall be made available with the building permit(s) issued for the building, and made available to the enforcement agency for all applicable inspections. I understand that a completed signed copy of this Certificate of Compliance is required to be included with the documentation the builder provides to the building owner at occupancy.

Responsible Designer Name: Jaime Zaldivar, PE	Responsible Designer Signature:	
Company : ZAL Engineering, Inc.	Date Signed: 12.12.2019	
Address: 99 Pacific St, Ste 375G	License: M37306	
City/State/Zip: Monterey, CA 93940	Phone: 831.641.7739	

STATE OF CALIFORNIA
HVAC DRY & WET SYSTEM REQUIREMENTS
CEC-NRCC-MCH-02-E (Revised 01/16) CALIFORNIA ENERGY COMMISSION

CERTIFICATE OF COMPLIANCE	NRCC-MCH-02-E
HVAC Dry & Wet System Requirements	(Page 2 of 3)
Project Name: OUR LADY OF ASSUMPTION CHURCH	Date Prepared: 12.12.2019

B. Equipment Tags and System Description[1]- Wet Systems

MANDATORY MEASURES	*T-24 Sections*	*Reference to the Requirements in the Contract Documents[2]*		
Heating Hot Water Equipment Efficiency[3]	110.1			
Cooling Chilled and Condenser Water Equipment Efficiency[3]	110.1, 140.4(i)			
Open and Closed Circuit Cooling Towers conductivity or flow-based controls	110.2(e) 1			
Open and Closed Circuit Cooling Towers Maximum Achievable Cycles of Concentration (LSI)[3]	110.2(e) 2			
Open and Closed Circuit Cooling Towers Flow Meter with analog output	110.2(e) 3			
Open and Closed Circuit Cooling Towers Overflow Alarm	110.2(e) 4			
Open and Closed Circuit Cooling Towers Efficient Drift Eliminators	110.2(e) 5			
Pipe Insulation	120.3			
PRESCRIPTIVE MEASURES				
Cooling Tower Fan Controls	140.4(h)2, 140.4(h)5	○ Yes ○ No	○ Yes ○ No	○ Yes ○ No
Cooling Tower Flow Controls	140.4(h)3			
Centrifugal Fan Cooling Towers[4]	140.4(h)4			
Air-Cooled Chiller Limitation[5]	140.4(j)			
Variable Flow System Design	140.4(k)			
Chiller and Boiler Isolation	140.4(k)			
CHW and HHW Reset Controls	140.4(k)			
WLHP Isolation Valves	140.4(k)			
VSD on CHW, CW & WLHP Pumps >5HP	140.4(k)			
DP Sensor Location	140.4(k)			

Notes:

1. *Provide equipment tags (e.g. CH 1 to 3) or system description (e.g. CHW loop) as appropriate. Multiple units with common requirements can be grouped together.*
2. *Provide references to plans (i.e. Drawing Sheet Numbers) and/or specifications (including Section name/number and relevant paragraphs) where each requirement is specified. Enter "N/A" if the requirement is not applicable to this system.*
3. *The referenced plans and specifications must include all of the following information: equipment tag, equipment nominal capacity, Title 24 minimum efficiency requirements, and actual rated equipment efficiencies. Where multiple efficiency requirements are applicable (e.g. full- and part-load) include all. For chillers operating at non-standard efficiencies provide the Kadj values. For chillers also note whether the efficiencies are Path A or Path B.*
4. *Identify if cooling towers have propeller fans. If towers use centrifugal fans document which exception is used.*
5. *If air-cooled chillers are used, document which exceptions have been used to comply with 140.4(j) and the total installed design capacity of the air-cooled chillers in the chilled water plant.*
6. *Identify the existence of a completed MCH-06-E when open or closed circuit cooling towers are specified to be installed, otherwise enter "N/A".*

ZAL ENGINEERING
MECHANICAL CONSULTANTS
99 PACIFIC ST, STE 375G
MONTEREY, CA 93940
TELEPHONE (831) 641-7739
JOB NO. 19046.00

REGISTERED PROFESSIONAL ENGINEER
JAIME ZALDIVAR MARTINEZ
No. 37306
EXP. 3/31/23
MECHANICAL
STATE OF CALIFORNIA

OUR LADY OF ASSUMPTION CHURCH

100 SALINAS ROAD
PAJARO, CA, 95076

NO.	DESCRIPTION	DATE
1	.	.
2		
3		
4		
5		

ENGINEER BY:
DRAWN BY:
CHECKED BY:

SHEET NUMBER
T24.2

SHEET OF

THE USE OF THESE PLANS AND SPECIFICATIONS IS RESTRICTED TO THE ORIGINAL SITE FOR WHICH THEY WERE PREPARED, AND PUBLICATION THEREOF IS EXPRESSLY LIMITED TO SUCH USE. RE-USE, REPRODUCTION OR PUBLICATION BY ANY METHOD IN WHOLE OR IN PART IS PROHIBITED. TITLE TO THE PLANS AND SPECIFICATIONS REMAINS WITH THE ENGINEER AND VISUAL CONTACT WITH THEM CONSTITUDES PRIMA FACIE EVIDENCE OF THE ACCEPTANCE OF THESE RESTRICTIONS.

GENERAL CONSTRUCTION NOTES

1. CONTRACTOR SHALL COMPLY WITH ALL APPLICABLE CODES AND REGULATIONS. MATERIALS AND EQUIPMENT SHALL BE U.L. LISTED AND LABELED FOR THE APPLICATION.
2. THE CONTRACTOR SHALL OBTAIN AND PAY FOR ALL PERMITS, LICENSES AND INSPECTION FEES REQUIRED BY THIS CONTRACT WORK.
3. CONTRACTOR SHALL VISIT THE PROJECT SITE PRIOR TO BIDDING AND ALLOW FOR ALL FIELD CONDITIONS. THE CONTRACTOR SHALL BE RESPONSIBLE FOR ALL ELECTRICAL WORK NOTED AND CALLED OUT ON ALL CONTRACT DOCUMENTS. THE CONTRACTOR SHALL OBTAIN INFORMATION AND BE FAMILIAR WITH ALL OTHER TRADES WORK. THE CONTRACTOR SHALL BE RESPONSIBLE FOR COORDINATION BETWEEN OTHER TRADES ON PROJECT.
4. CONTRACTOR SHALL BE RESPONSIBLE FOR THE SAFETY OF PERSONS AND PROPERTY AND SHALL PROVIDE INSURANCE COVERAGE AS NECESSARY FOR LIABILITY AND PERSONAL, PROPERTY DAMAGE, TO FULLY PROTECT THE OWNER, ARCHITECT AND ENGINEER FROM ANY AND ALL CLAIMS RESULTING FROM THIS WORK.
5. CONTRACTOR SHALL MAINTAIN RECORD DRAWINGS AT THE PROJECT SITE INDICATING ALL MODIFICATIONS TO ELECTRICAL SYSTEMS. THE CONTRACTOR SHALL AT THE CONCLUSION OF THE PROJECT PROVIDE ACCURATE "AS-BUILT" DRAWINGS ACCEPTABLE TO THE ARCHITECT.
6. ALL MATERIALS PROVIDED TO THE PROJECT SHALL BE NEW. THE CONTRACTOR SHALL BE RESPONSIBLE TO PROVIDE AND INSTALL ALL INCIDENTAL MATERIALS REQUIRED FOR A COMPLETE INSTALLATION.
7. CONTRACTOR SHALL PROVIDE TO THE ARCHITECT A CONSTRUCTION SCHEDULE OF ELECTRICAL WORK. THE CONSTRUCTION SCHEDULE SHALL IDENTIFY ALL SIGNIFICANT MILESTONES WITH COMPLETION DATES.
8. CONTRACTOR SHALL PROVIDE ALL REQUIRED "CUTTING, PATCHING, EXCAVATION, BACKFILL AND REPAIRS" NECESSARY TO RESTORE DAMAGED SURFACES TO EQUAL OR BETTER THAN ORIGINAL CONDITIONS EXISTING AT START OF WORK.
9. CONTRACTOR SHALL BE RESPONSIBLE FOR PAINTING ALL EXPOSED CONDUITS AND ELECTRICAL EQUIPMENT. REFER TO ARCHITECTS PAINTING SECTION FOR REQUIREMENTS.
10. ALL ELECTRICAL EQUIPMENT INSTALLED OUTDOORS SHALL BE WEATHERPROOF. EXTERIOR CONDUITS RUN INTO BUILDINGS SHALL BE INSTALLED WITH FLASHING, CAULKED AND SEALED. CONDUITS FOR EXTERIOR ELECTRICAL DEVICES SHALL BE RUN INSIDE BUILDING UNLESS OTHERWISE NOTED ON DRAWINGS.
11. ALL CONDUITS UNLESS OTHERWISE NOTED ON DRAWINGS SHALL HAVE AS A MINIMUM: TWO (2) #12s WITH ONE (1) #12 GROUND. "TICK" MARKS SHOWN ON CIRCUITRY ARE FOR ROUGH ESTIMATING ONLY. THE CONTRACTOR SHALL BE RESPONSIBLE FOR ALL WIRES AND WIRE SIZES REQUIRED BY LATEST CODE.
12. ALL BRANCH CIRCUITS SHALL HAVE INDIVIDUAL NEUTRALS. SHARED NEUTRALS ON MULTIWIRE CIRCUITS IS NOT ALLOWED.
13. ALL 120/277V LIGHT SWITCHES AND WALL OCCUPANT SENSORS SHALL HAVE A NEUTRAL INSTALLED TO THE DEVICE BOX EXCEPT WHERE A CONDUIT OR SURFACE RACEWAY SYSTEM IS INSTALLED.
14. COORDINATE ALL CONDUIT RUNS, ELECTRICAL EQUIPMENT AND PANELS WITH ALL OTHER WORK TO AVOID CONFLICTS.
15. SEE ARCHITECTURAL DOCUMENTS FOR EXACT PLACEMENT OF LIGHTING FIXTURES AND DEVICES. THE ELECTRICAL CONTRACTOR SHALL BE RESPONSIBLE FOR VERIFICATION OF CEILING TYPES FROM ARCHITECTURAL DOCUMENTS AND PROVIDE AND INSTALL ALL REQUIRED FIXTURE MOUNTING HARDWARE. PROVIDE AND INSTALL U.L. LISTED FIRE STOP ENCLOSURES FOR ALL RECESSED FIXTURES IN FIRE RATED CEILINGS.
16. FROM ALL NEW FLUSH MOUNT PANELS; THE CONTRACTOR SHALL STUB UP INTO ACCESSIBLE CEILING SPACE A MINIMUM OF FOUR (4) 3/4" CONDUITS FOR FUTURE USE.
17. CONTRACTOR SHALL, PRIOR TO BID, FIELD VERIFY ALL REQUIREMENTS FOR MODIFYING THE EXISTING CLOCK, DATA, AND INTERCOM SYSTEMS TO ACCOMMODATE ADDITIONS NOTED. THE CONTRACTOR SHALL PROVIDE ALL MATERIALS NEEDED TO MAKE A FULLY OPERATIONAL SYSTEM AT THE CONCLUSION OF PROJECT WORK.
18. CONTRACTOR SHALL PROVIDE IN EVERY NEW EMPTY CONDUIT A DRAW STRING FOR USE IN FUTURE CONSTRUCTION.
19. ALL CONDUIT SHALL BE CONCEALED WHERE POSSIBLE. CUT AND PATCH EXISTING WALLS WHERE NECESSARY. WHERE IT IS NECESSARY TO CUT OR BORE EXISTING STRUCTURAL WALLS FOR NEW ELECTRICAL WORK OBTAIN PERMISSION FROM THE ARCHITECT PRIOR TO STARTING WORK. REUSE (E) CONDUIT WHERE POSSIBLE.
20. WHERE IT IS NOT POSSIBLE TO REUSE (E) CONDUIT OR RUN (N) CONCEALED CONDUIT USE NON-METALLIC SURFACE RACEWAY AND BOXES. ROUTING OF ALL NON-METALLIC RACEWAYS SHALL BE APPROVED BY THE ARCHITECT OR OWNER'S REPRESENTATIVE PRIOR TO ROUGH-IN.
21. EXTENSION RINGS OR RESET BOXES TO BE FLUSH WITH NEW WALL THICKNESS.
22. CONTRACTOR SHALL BE RESPONSIBLE FOR ALL DAMAGE TO (E) UNDERGROUND SYSTEMS (GAS, WATER, TELEPHONE, ELECTRICAL, SEWER, ETC.). THE CONTRACTOR SHALL REPAIR & PAY ALL EXPENSES FOR DAMAGE TO (E) UNDERGROUND SYSTEMS AS A RESULT OF (N) WORK. REPAIR TO DAMAGED UNDERGROUND SYSTEMS SHALL BE TO THE OWNERS SATISFACTION WITHOUT EXTRA EXPENSE TO THE OWNER.
23. EXISTING WIRING SHOWN HAS BEEN TAKEN FROM OLD PLANS AND IS ASSUMED TO BE CORRECT. ELECTRICAL CONTRACTOR SHALL FIELD VERIFY ACTUAL CONDITIONS AND MAKE ADJUSTMENTS TO SUIT ACTUAL CONDITIONS AND TO MEET THE INTENT OF THE CONTRACT DOCUMENTS.
24. WHERE NON-METALLIC SHEATHED CONDUCTORS ARE FOUND, THE CONTRACTOR SHALL REMOVE TO FULLEST EXTENT PER THE GENERAL DEMOLITION NOTES AND REPLACE WITH CONDUIT. METAL CLAD CABLE WILL BE PERMITTED ON A CASE-BY-CASE BASIS ONLY BY WRITTEN APPROVAL FROM THE ARCHITECT.
25. ALL INSTALLATION OF EXPOSED SURFACE MOUNTED RACEWAY IN PUBLIC AREAS SHALL BE REVIEWED BY ELECTRICAL ENGINEER BEFORE ROUGH-IN. CONTRACTOR IS TO DETERMINE THE ACCESSIBILITY OF ATTIC, FURRED SPACE, HOLLOW MULLIONS, ETC. IN EACH AREA AND REVIEW WITH ENGINEER. IF SYSTEM CAN BE ROUTED CONCEALED EITHER BY FISHING OR ACCESSIBILITY, CONTRACTOR IS TO DO SO. IF INACCESSIBILITY IS DETERMINED, CONTRACTOR SHALL INSTALL SURFACE MOUNTED RACEWAY IN THE MOST AESTHETICALLY PLEASING MEANS AS DETERMINED BY THE THE ENGINEER. NO ALLOWANCE FOR ADDITIONAL COMPENSATION DUE TO ROUTING AS DIRECTED BY THE ENGINEER WILL BE MADE.
26. CONTRACTOR SHALL COORDINATE WITH PG&E, AT&T & PAY ALL CHARGES FOR TEMPORARY CONSTRUCTION POWER & TELEPHONE.
27. CONTRACTOR SHALL COORDINATE WITH UTILITY COMPANIES AND OBTAIN UTILITY COMPANY CONSTRUCTION DOCUMENTS. UTILITY COMPANY CHARGES SHALL BE PAID BY OWNER.

LIGHT FIXTURE SCHEDULE

FIXTURE NOTES:

1. ALL LED LIGHT FIXTURE DRIVERS SHALL BE ELECTRONIC TYPE, 10% TOTAL HARMONIC DISTORTION MAXIMUM.
2. ALL LED LIGHT MODULES SHALL BE ENERGY SAVING 3500° K, 80 CRI MINIMUM, U.O.N. (SEE SPECIFICATIONS FOR MORE INFORMATION).
3. ALL LED DRIVERS (AND ASSOC. FIXTS.) SHALL HAVE MANUFACTURER'S CERTIFICATION OF COMPLIANCE WITH CALIFORNIA ENERGY COMMISSION STANDARDS AND REQUIREMENTS, WHERE SUCH ARE USED IN CONDITIONED SPACES.
4. EXIT SIGNS , EMERGENCY LIGHTS AND LIGHT FIXTURES WITH EMERGENCY BATTERY BACK-UP SHALL SUPPLY A MINIMUM DURATION OF 90 MINUTES OF POWER IN THE EVENT OF A POWER OUTAGE/FAILURE.

TYPE	DESCRIPTION	LAMPS	MANUFACTURER
A	2' x 4' T-BAR LED FIXTURE, DIE FORMED HOUSING, POLYESTER POWDER PAINT, SQUARE SMOOTH DIFFUSER, 48LHE, 0-10V DIMMING DRIVER, 120V.	55W 3500°K LED	FINELITE HPR LED SERIES
AE	SAME AS FIXTURE TYPE "A" EXCEPT WITH AN ADDITIONAL EMERGENCY BATTERY BACK-UP E10WLCP.	55W 3500°K LED	FINELITE HPR LED SERIES

ELECTRICAL SYMBOLS & ABBREVIATIONS

SYMBOLS & ABBREVIATIONS SHOWN ARE FOR GENERAL USE. DISREGARD THOSE WHICH DO NOT APPEAR ON THE PLANS.

- FLUORESCENT OR LED LUMINAIRE - SEE SCHEDULE
- EMERGENCY OR NIGHT LIGHT
- STRIP FLUORESCENT OR LED LUMINAIRE - SEE SCHEDULE
- LUMINAIRE - RECESSED - SEE SCHEDULE
- RECESSED WALL WASHER
- LUMINAIRE - SURFACE MOUNTED - SEE SCHEDULE
- LUMINAIRE - POLE OR POST MOUNTED - SEE SCHEDULE
- LUMINAIRE - WALL MOUNTED SEE SCHEDULE
- BOLLARD OR PATH LIGHT - SEE SCHEDULE
- EXIT LIGHT - DIRECTIONAL ARROWS AS INDICATED - SEE SCHEDULE
- TRACK LIGHTING - SEE SCHEDULE
- EMERGENCY LIGHT
- DIGITAL DUAL TECHNOLOGY OCC. SENSOR
- LIGHTING CONTROL OCCUPANCY SENSOR CORNER MOUNTED
- DRC DIMMER ROOM CONTROLLER
- PC PLUG LOAD CONTROLLER
- RC ROOM LIGHTING CONTROLLER
- LCP LIGHTING CONTROL PANEL
- DL DIGITAL DAYLIGHT SENSOR
- $ SINGLE POLE SWITCH **
- $a SINGLE POLE SWITCH, ** a = CIRCUIT CONTROLLED
- $3 THREE WAY SWITCH**
- $4 FOUR WAY SWITCH**
- $M MANUAL MOTOR STARTER
- $K KEY OPERATED SWITCH **
- LIGHTING DIMMER**
- DIGITAL ON/OFF SWITCH **
- D DIGITAL DIMMER SWITCH **
- M# DIGITAL MULTI SCENE LIGHTING SWITCH **
- S DIGITAL DUAL TECHNOLOGY WALL OCC. SENSOR **
- WALL OCCUPANCY SENSOR **
- 2 DOUBLE SWITCHED WALL OCCUPANCY SENSOR **
- DIMMING DUAL TECHNOLOGY WALL SWITCH OCCUPANCY SENSOR **
- 2 2-BUTTON DIMMING DUAL TECHNOLOGY WALL SWITCH OCCUPANCY SENSOR **

- SECURITY DOOR CONTACTS
- MD SECURITY MOTION DETECTOR
- SC CCTV CAMERA
- KP SECURITY SYSTEM KEYPAD
- DOOR BELL PUSHBUTTON
- CH DOOR CHIME WITH LED
- RECEPTACLE - DUPLEX *
- DUPLEX RECEPTACLE MOUNTED ABOVE COUNTER - FIELD VERIFY HEIGHT
- GFCI CONVENIENCE RECEPTACLE - DUPLEX*
- GFCI CONVENIENCE DUPLEX RECEPTACLE MOUNTED ABOVE COUNTER - FIELD VERIFY HEIGHT
- RECEPTACLE DOUBLE DUPLEX*
- HALF SWITCHED DUPLEX RECEPTACLE *
- SINGLE RECEPTACLE*
- DUPLEX RECEPTACLE - CEILING MOUNTED
- HC LETTER INDICATES DUPLEX HALF CONTROLLED RECEPTACLE *
- C LETTER INDICATES DUPLEX FULLY CONTROLLED RECEPTACLE *
- FLOOR MOUNTED DUPLEX RECEPTACLE
- FLOOR MOUNTED BOX
- POWER OUTLET - SEE PLANS FOR NEMA TYPE*
- POWER POLE
- WALL TELEPHONE OUTLET **
- [#] VOICE/DATA WALL OUTLET *
- [#] VOICE/DATA OUTLET MOUNTED ABOVE COUNTER - FIELD VERIFY HEIGHT
- [#] SURFACE MOUNTED VOICE/DATA WALL OUTLET *
- [#] SURFACE MOUNTED VOICE/DATA OUTLET MOUNTED ABOVE COUNTER - FIELD VERIFY HEIGHT
- WIRELESS ACCESS POINT (WAP) - CEILING MOUNTED
- WIRELESS ACCESS POINT (WAP) - WALL MOUNTED - FIELD VERIFY HEIGHT
- [#] VOICE/DATA OUTLET - FLOOR MOUNTED
- TV OUTLET *
- [#] VOICE/DATA OUTLET - CEILING MOUNTED
- S INTERIOR SPEAKERS CEILING MOUNTED
- S INTERIOR SPEAKERS WALL MOUNTED
- C CLOCK +8'-0" AFF U.O.N. VERIFY BEFORE INSTALLATION

- PANELBOARD - FLUSH MOUNTED
- EQUIPMENT PANEL - FLUSH MOUNTED
- PANELBOARD - SURFACE MOUNTED
- EQUIPMENT PANEL - SURFACE MOUNTED
- M METER W/ CURRENT TRANSFORMER
- J JUNCTION BOX - CEILING OR WALL MOUNTED, SIZE PER CODE, TAPE AND TAG WIRES
- MOTOR CONNECTION
- NON-FUSED DISCONNECT SWITCH
- FUSED DISCONNECT SWITCH; FUSED WITH DUAL-ELEMENT FUSES SIZED PER EQUIPMENT MFGR'S NAMEPLATE DATA
- COMBINATION STARTER/FUSED DISCONNECT SWITCH; FUSED DISCONNECT SWITCH ELEMENT FUSES SIZED PER EQUIPMENT MFGRS NAMEPLATE DATA
- MAGNETIC STARTER - NEMA SIZE INDICATED NEMA 3R ENCLOSURE UNLESS OTHERWISE SPECIFIED
- CIRCUIT BREAKER
- GROUND ROD WITH GROUNDWELL BOX
- GROUND ELECTRODE
- NORMALLY OPEN CONTACT
- NORMALLY CLOSED CONTACT
- TRANSFORMER - SEE SINGLE LINE FOR SIZE
- PULLBOX
- FLEX CONDUIT WITH CONNECTION
- CONDUIT - UP
- CONDUIT - DOWN
- E CONDUIT EMERGENCY SYSTEM
- LV LOW VOLTAGE WIRING
- SURFACE METAL OR NON-METALLIC RACEWAY
- CONDUIT - CONCEALED IN WALLS OR CEILING
- CONDUIT - EXISTING
- CONDUIT - BELOW SLAB OR UNDERGROUND: 3/4"MIN.
- CAPPED OR STUB-OUT CONDUIT
- CONDUIT CONTINUATION
- #10 CONDUIT - HOME RUN TO PANEL, TERMINAL CABINET, ETC. RUNS MARKED WITH CROSSHATCHES INDICATE NUMBER OF #12 AWG WIRES WHEN MORE THAN TWO. SIZE CONDUIT ACCORDING TO SPECIFICATIONS AND APPLICABLE CODE. CROSS HATCHES WITH NUMBER ADJACENT INDICATES WIRE SIZE OTHER THAN #12 AWG.
- 2 SHEET NOTE REFERENCE SYMBOL; SEE ASSOCIATED NOTE ON SAME SHEET
- 3 SCHEDULE SYMBOL; SEE ASSOCIATED NOTE ON SAME SHEET

- 2 DETAIL NOTE REFERENCE SYMBOL SEE ASSOCIATED NOTE ON SAME DETAIL
- F301 FEEDER DESIGNATION; SEE ASSOCIATED NOTE ON SAME DETAIL
- 1 / E3.0: DETAIL NUMBER; DETAIL OR SECTION REFERENCE; SHEET NUMBER
- 1 / 2: INDICATES QUANTITY OF TELEPHONE OUTLETS; INDICATES QUANTITY OF DATA OUTLETS

ABBREVIATIONS

A	AMPERE	GFCI	GROUND FAULT	NTS	NOT TO SCALE
AFF	ABOVE FINISHED FLOOR	GFI	INTERRUPTING	OAH	OVERALL HEIGHT
ALUM/AL	ALUMINUM	GND, G	GROUND	OC	ON CENTER
ARCH	ARCHITECT	GRS	GALVANIZED RIGID STEEL	OH	OVERHEAD
AWG	AMERICAN WIRE GAUGE	HT	HEIGHT	PA	PUBLIC ADDRESS
BKR	BREAKER	IC	INTERCOM	PB	PULL BOX
C	CONDUIT	IDF	INTERMEDIATE DISTRIBUTION FRAME	PF	POWER FACTOR
CATV	CABLE TV	INCAND	INCANDESCENT	PH	PHASE
CB	CIRCUIT BREAKER	JB	JUNCTION BOX	PIR	PASSIVE INFRARED
CCTV	CLOSED CIRCUIT TV	KV	KILOVOLT	PNL	PANEL
CKT	CIRCUIT	KVA	KILOVOLT AMPERES	PV	PHOTOVOLTAIC
CL	CENTER LINE	KW	KILOWATT	PVC	POLYVINYL CHLORIDE
CLG	CEILING	LCP	LIGHTING CONTROL PANEL	PWR	POWER
C.O.	CONDUIT ONLY	LTG	LIGHTING	(R)	EXISTING TO BE REMOVED
CTR	CENTER	LV	LOW VOLTAGE	(RP)	REMOVABLE POLE
D	DIMMER	KCM	THOUSAND CIRCULAR MILS	RECPT'S	RECEPTACLES
DIM	DIMENSION	M.B.	MAIN CIRCUIT BREAKER	REQD	REQUIRED
DIST	DISTRIBUTION	MCA	MINIMUM CIRCUIT AMPS	REQMT'S	REQUIREMENT(S)
(E)	EXISTING	MDF	MAIN DISTRIBUTION FRAME	SHT	SHEET
EC	ELECTRICAL CONTRACTOR	MECH	MECHANICAL	SLD	SINGLE LINE DIAGRAM
(EL)	EVENING LIGHT	MH	METAL HALIDE	STC	SYSTEMS TERMINATION CABINET
EM	EMERGENCY	MLO	MAIN LUGS ONLY	SW	SWITCH
EMT	ELECTRICAL METALLIC TUBING	MPOE	MAIN POINT OF ENTRANCE	SWBD	SWITCHBOARD
EQUIP	EQUIPMENT	MTD	MOUNTED	TTB	TELEPHONE TERMINAL BACKBOARD
EV	ELECTRICAL VEHICLE	MTG	MOUNTING	TYP	TYPICAL
FA	FIRE ALARM	MOCP	MAXIMUM OVER CURRENT PROTECTION	UON	UNLESS OTHERWISE NOTED
FACP	FIRE ALARM CONTROL PANEL	(N)	NEW	UG	UNDERGROUND
FC	FOOT CANDLE	NIC	NOT IN CONTRACT	V	VOLT
FIN	FINISH	NIEC	NOT IN ELECTRICAL CONTRACT	VD	VOLTAGE DROP
FL	FLOOR	(NL)	NIGHT LIGHT	W	WATT
FLA	FULL LOAD AMPS	NO.	NUMBER	W/	WITH
FLUOR	FLUORESCENT	NTS	NOT TO SCALE	WP	WEATHERPROOF
(F)	FUTURE			XFMR	TRANSFORMER
GC	GENERAL CONTRACTOR				

FIRE ALARM

NOTE: SEE FIRE ALARM DRAWINGS FOR QUANTITIES AND MOUNTING HEIGHTS.

- P MANUAL PULL STATION
- STROBE ONLY
- HORN ONLY
- M MINI HORN
- HORN/STROBE
- CHIME/STROBE
- HEAT DETECTOR
- SMOKE DETECTOR
- DUCT SMOKE DETECTOR
- TAMPER SWITCH
- FLOW SWITCH
- POST INDICATING VALVE
- FIRE SMOKE DAMPER
- BELL (GONG)
- FCP FIRE ALARM CONTROL PANEL
- APS AUXILIARY POWER SUPPLY
- FSA FIRE SYSTEM ANNUNCIATOR
- FTR FIRE ALARM TRANSPONDER OR TRANSMITTER
- ESR ELEVATOR STATUS/RECALL
- FAC FIRE ALARM COMMUNICATOR
- ANN REMOTE ANNUNCIATORS
- EOL END OF LINE

* +15" A.F.F. TO BOTTOM OF BOX, U.O.N.
** +48" A.F.F. TO TOP OF BOX, U.O.N.
[#] NUMBER IN BRACKETS DENOTES NUMBER OF CABLE DROPS WHEN MORE THAN (2).

LIGHT FIXTURE SCHEDULE (con't)

TYPE	DESCRIPTION	LAMPS	MANUFACTURER
A2	SAME AS FIXTURE TYPE "A" EXCEPT 2' x 2' AND WATTAGE/LUMEN OUTPUT, 33LHE.	37W 3500°K LED	FINELITE HPR LED SERIES
A2E	SAME AS FIXTURE TYPE "A1" EXCEPT WITH AN ADDITIONAL EMERGENCY BATTERY BACK-UP E10WLCP .	37W 3500°K LED	FINELITE HPR LED SERIES
B	4' L. x 11" W. x 3" H. SURFACE MOUNTED LED LIGHT FIXTURE, EXTRUDED ALUMINUM BACKPLATE WITH DIE-CAST SQUARE END CAPS, BAKED WHITE ENAMEL FINISH, CLEAR UV STABILIZED HIGH IMPACT POLYCARBONATE LENS WITH WHITE OPAL ACRYLIC OVERLAY, CLOSED CELL NEOPREN GASKETING, 0-10V DIMMING DRIVER, 277V	38W 3500°K LED	PHILIPS DAYBRITE LPL LED SERIES
C	6" DIA., RECESSED LED DOWNLIGHT FIXTURE, DIE-FORMED HOUSING, LOW IRIDESCENT ALUMINUM CLEAR SEMI-EPECULAR REFLECTOR, 0-10 DIMMING DRIVER, 277V	19W 3500°K LED	WILLIAMS LIGHTING LED60-PH SERIES
CE	SAME AS FIXTURE TYPE "C" EXCEPT WITH ADDITIONAL EMERGENCY BATTERY BACK-UP.	19W 3500°K LED	WILLIAMS LIGHTING LED60-PH SERIES
D	25 ¼" LONG WALL MOUNTED LED VANITY FIXTURE, DIE-FORMED STEEL HOUSING, ACRYLIC DIFFUSER, ADA COMPLIANT, FINISH PER ARCHITECT, 0-10V DIMMING DRIVER, 120V.	25W LED 3000°K 90 CRI 2000 LUMENS	AFX ALV SERIES .
E	LED EXIT LIGHT, GREEN LETTERS, WHITE FINISH HOUSING WITH EMERGENCY BATTERY BACK-UP SELF-TESTING ELECTRONIC, CLEAR BACKGROUND, UNIVERSAL MOUNT, SEE PLANS FOR NUMBER OF FACES, ARROWS AND MOUNTING REQUIRED, 120V.	INCLUDED . .	PHILIPS CHLORIDE 44R LINE .
XA	APPROXIMATELY 8" x 8" x 4¼" DEEP SURFACE MOUNTED LED LIGHT FIXTURE, CUT-OFF OPTICS, BLACK FINISH, ONE PIECE DIE-CAST ALUMINUM COPPER FREE ALUMINUM HOUSING AND COVER PLATE, SAFETY GLASS WITH OPTICAL TEXTURE, FULLY GASKETED. INTEGRAL MULTI-VOLTAGE DRIVER.	17.5W LED 4000K	BEGA PRODUCTS 22256 SERIES
XAE	SAME AS FIXTURE TYPE "XA", EXCEPT WITH BATTERY BACK-UP.	17.5W LED 4000K	BEGA PRODUCTS 22256 SERIES

APPLICABLE CODES & STANDARDS

CODES:

1. 2016 CALIFORNIA ADMINISTRATIVE CODE C.C.R., TITLE 24, PART 1.
2. 2016 CALIFORNIA BUILDING CODE (CBC) C.C.R., TITLE 24, VOL. 1 & 2 BASED ON THE 2015 INTERNATIONAL BUILDING CODE (IBC) WITH CALIFORNIA AMENDMENTS.
3. 2016 CALIFORNIA ELECTRICAL CODE (CEC) C.C.R., TITLE 24, PART 3 BASED ON THE 2014 NATIONAL ELECTRICAL CODE (NEC) WITH CALIFORNIA AMENDMENTS.
4. 2016 CALIFORNIA MECHANICAL CODE (CMC) C.C.R., TITLE 24, PART 4 BASED ON THE 2015 UNIFORM MECHANICAL CODE (UMC) WITH CALIFORNIA AMENDMENTS.
5. 2016 CALIFORNIA PLUMBING CODE (CPC) C.C.R., TITLE 24, PART 5 BASED ON THE 2015 UNIFORM PLUMBING CODE (UPC) WITH CALIFORNIA AMENDMENTS.
6. 2016 CALIFORNIA ENERGY CODE C.C.R., TITLE 24, PART 6.
7. 2016 CALIFORNIA FIRE CODE (CFC) C.C.R., TITLE 24, PART 9 BASED ON THE 2015 INTERNATIONAL FIRE CODE (IFC) WITH CALIFORNIA AMENDMENTS.
8. 2016 CALIFORNIA GREEN BUILDING STANDARDS CODE C.C.R., TITLE 24, PART 11.
9. 2016 CALIFORNIA REFERENCED STANDARDS CODE C.C.R., TITLE 24, PART 12.
10. TITLE 19 C.C.R., PUBLIC SAFETY, STATE FIRE MARSHAL REGULATIONS.
11. NATIONAL FIRE ALARM CODE (NFPA 72) 2016.
12. CITY OF WATSONVILLE ORDINANCES, CODES, AND REGULATIONS.

STANDARDS:

1. AMERICAN NATIONAL STANDARDS INSTITUTE (ANSI)
2. ELECTRONICS INDUSTRIES ASSOCIATION (EIA)
3. INSTITUTE OF ELECTRICAL AND ELECTRONIC ENGINEERS (IEEE)
4. NATIONAL ELECTRICAL MANUFACTURERS ASSOCIATION (NEMA)
5. NATIONAL ELECTRICAL TESTING ASSOCIATION (NETA)
6. UNDERWRITER LABORATORIES (UL)
7. CALIFORNIA OCCUPATIONAL SAFETY AND HEALTH ACT STANDARDS (CAL/OSHA)

SHEET INDEX

E0.1	SYMBOLS, ABBREVIATIONS, LIGHT FIXTURE SCHEDULE, CODES, STANDARDS, NOTES & SHEET INDEX.
E0.2	CALIFORNIA ENERGY COMPLIANCE TITLE 24 (BUILDING INTERIOR).
E0.3	CALIFORNIA ENERGY COMPLIANCE TITLE 24 (BUILDING EXTERIOR).
E1.1	ELECTRICAL SINGLE LINE DIAGRAM & PANELBOARD SCHEDULES.
E2.1	ELECTRICAL SITE PLAN.
E3.1	ELECTRICAL DEMOLITION PLAN & NOTES.
E4.1	POWER & SYSTEMS PLAN - LOWER LEVEL.
E4.2	POWER & SYSTEMS PLAN - UPPER LEVEL.
E5.1	LIGHTING PLAN - LOWER LEVEL.
E5.2	LIGHTING PLAN - UPPER LEVEL.
E6.1	ELECTRICAL DETAILS.
E6.2	ELECTRICAL DETAILS.
E6.3	ELECTRICAL DETAILS.
E6.4	ELECTRICAL DETAILS.

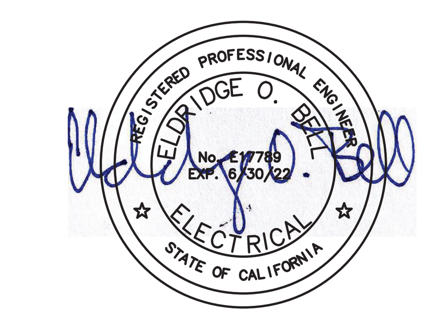

AURUM CONSULTING ENGINEERS MONTEREY BAY, INC.
Project No. 17399.00
60 Garden Court • Suite 210 • Monterey, CA 93940
T.831.646.3330 • F.831.646.3336 • www.acemb.com

These drawings are instruments of service and are the property of AURUM CONSULTING ENGINEERS MONTEREY BAY, INC. All designs and other information in the drawings are for use on the specified project and shall not be used otherwise without the expressed written permission of AURUM CONSULTING ENGINEERS MONTEREY BAY, INC.

JOB No:

DESCRIPTION: | DATE: | REV:

APN: 117-323-011-000

OUR LADY OF ASSUMPTION CHURCH
100 SALINAS ROAD
WATSONVILLE, CA

Sheet Title: ELECTRICAL COVER SHEET

and associates
230 Capitol St
Salinas, CA. 93901
P (831)771-2802
F (831)771-2818

Copyright Notice:

E 0.1

G:\Projects\17\Jobs\17399.00 Our Lady of Assumption Church\Dwgs01\17399E0.1.dwg, 9/29/2021 4:46:59 PM, elias, AutoCAD PDF (General Documentation).pc3

STATE OF CALIFORNIA
Indoor Lighting
NRCC-LTI-E (Created 3/18) CALIFORNIA ENERGY COMMISSION

CERTIFICATE OF COMPLIANCE	NRCC-LTI-E
This document is used to demonstrate compliance with requirements in §110.9, §130.0, §130.1, §140.6, and §141.0(b)2 for indoor lighting scopes using the prescriptive path.	
Project Name: Our Lady of Assumption Church	Report Page: Page 1 of 9
Project Address: 100 Salinas Rd.	Date Prepared: 12/11/19

A. GENERAL INFORMATION

01	Project Location (city)	Watsonville	04	Total Conditioned Floor Area (ft²)	11,015
02	Climate Zone	3	05	Total Unconditioned Floor Area (ft²)	
03	Occupancy Types Within Project (select all that apply):		06	# of Stories (Habitable Above Grade)	

☐ Office ☐ Retail ☐ Warehouse ☐ Hotel/Motel ☐ School ☑ Support Areas
☐ Parking Garage ☐ High-Rise Residential ☐ Relocatable ☑ Other (write in): Religious Facility Building

B. PROJECT SCOPE

Table Instructions: Include any lighting systems that are within the scope of the permit application and are demonstrating compliance using the prescriptive path outlined in §140.6 or §141.0(b)2 for alterations. WARNING: Changing the Calculation Method in this table will result in the deletion of data previously input. If you need to change the calculation method, please open a new form or use "Save As".

Scope of Work		Conditioned Spaces		Unconditioned Spaces	
01		02	03	04	05
My Project Consists of (check all that apply):		Calculation Method	Area (ft²)	Calculation Method	Area (ft²)
☐ New Lighting System					
☑ Altered Lighting System	Entire Luminaire Alteration	Area Category	11,015		
	Total Area of Work (ft²)	11,015			

C. COMPLIANCE RESULTS

Table Instructions: If any cell on this table says "DOES NOT COMPLY" or "COMPLIES with Exceptional Conditions" refer to Table D. for guidance.

Lighting in conditioned and unconditioned spaces must not be combined for compliance per §140.6(b)1.	Allowed Lighting Power per §140.6(b) (Watts)							Actual Lighting Power per §140.6(a) (Watts)					Compliance Results
	01	02	03	04		05		06	07	08		09	10
	Complete Building §140.6(c)1	Area Category §140.6(c)2	Area Category Footnotes §140.6(c)2G (+)	Tailored §140.6(c)3 (+)	=	Total Allowed (Watts)	≥	Total Designed (Watts)	Adjustments: Portable Lighting §140.6(a) (-)	Adjustments: PAF Control Credits §140.6(a)2 (-)	=	Total Actual (Watts) *Includes Adjustments	05 Must be ≥ 09 §140.6
	(See Table I)	(See Table I)	(See Table K)	(See Table L)				(See Table F)	(See Table J)	(See Table R)			
Conditioned:		9,788.75			=	9,788.75	≥	7,109			=	7,109	COMPLIES
Unconditioned:					=		≥				=		
										Controls Compliance (See Table H for Details)			COMPLIES with Exceptional Conditions
										Rated Power Reduction Compliance (See Table S for Details)			Not Applicable

STATE OF CALIFORNIA
Indoor Lighting
NRCC-LTI-E (Created 3/18) CALIFORNIA ENERGY COMMISSION

CERTIFICATE OF COMPLIANCE	NRCC-LTI-E
Project Name: Our Lady of Assumption Church	Report Page: Page 2 of 9
Project Address: 100 Salinas Rd.	Date Prepared: 12/11/19

D. EXCEPTIONAL CONDITIONS

This table is auto-filled with uneditable comments because of selections made or data entered in tables throughout the form.

Table H. Indoor Lighting Controls Permit Applicant Notes:
Janitor Rm. 1 105: Multi-Level: Exempt because less than 100 sq. ft.
Storage Rm. 106: Multi-Level: Exempt because less than 100 sq. ft.
Storage 201: Multi-Level: Exempt because less than 100 sq. ft.
Storage 202: Multi-Level: Exempt because less than 100 sq. ft.
Janitor Closet 211: Multi-Level: Exempt because less than 100 sq. ft.
Storage 213: Multi-Level: Exempt because less than 100 sq. ft.
Hallways: Shut-Off: Dim to 50% when Unoccupied.
Stairs: Shut-Off: Dim to 50% when Unoccupied.
Multi-Purpose Room 100: Daylighting: Exempt because lighting power density is 85% less of allowance.
Office 1 203: Daylighting: Exempt because lighting power density is 85% less of allowance.
Office 2 204: Daylighting: Exempt because lighting power density is 85% less of allowance.
Office 3 205: Daylighting: Exempt because lighting power density is 85% less of allowance.
Office 4 206: Daylighting: Exempt because lighting power density is 85% less of allowance.
Office 5 207: Daylighting: Exempt because lighting power density is 85% less of allowance.
Office 6 214: Daylighting: Exempt because lighting power density is 85% less of allowance.
Office 7 215: Daylighting: Exempt because lighting power density is 85% less of allowance.
Electronics Room 104: Multi-Level: Exempt because less than 100 sq. ft.

E. ADDITIONAL REMARKS

This table includes remarks made by the permit applicant to the Authority Having Jurisdiction.

F. INDOOR LIGHTING FIXTURE SCHEDULE

Table Instructions: Include all permanent designed lighting and all portable lighting in offices.

Designed Wattage: Conditioned Spaces

01	02	03		04	05	06	07	08	09	
Name or Item Tag	Complete Luminaire Description	Specialized Luminaire Types: Track	Portable	Watts per luminaire[1]	How Wattage is determined	Total number luminaires	Exempt per §140.6(a)3	Design Watts	Field Inspector: Pass	Fail
A	2' x 4' T-bar LED	☐	☐	55	Mfr. Spec[1]	73	☐	4,015	☐	☐
AE	2' x 4' T-bar LED EM	☐	☐	55	Mfr. Spec[1]	15	☐	825	☐	☐

Table Continued

STATE OF CALIFORNIA
Indoor Lighting
NRCC-LTI-E (Created 3/18) CALIFORNIA ENERGY COMMISSION

CERTIFICATE OF COMPLIANCE	NRCC-LTI-E
Project Name: Our Lady of Assumption Church	Report Page: Page 3 of 9
Project Address: 100 Salinas Rd.	Date Prepared: 12/11/19

01	02	03		04	05	06	07	08	09	
Name or Item Tag	Complete Luminaire Description	Specialized Luminaire Types: Track	Portable	Watts per luminaire[1]	How Wattage is determined	Total number luminaires	Exempt per §140.6(a)3	Design Watts	Field Inspector: Pass	Fail
A2	2' x 2' T-bar LED	☐	☐	37	Mfr. Spec[1]	25	☐	925	☐	☐
A2E	2' x 2' T-bar LED EM	☐	☐	37	Mfr. Spec[1]	15	☐	555	☐	☐
B	4'L Surface Mount LED	☐	☐	31	Mfr. Spec[1]	9	☐	279	☐	☐
C	6" Dia. Recessed LED Downlight	☐	☐	18	Mfr. Spec[1]	18	☐	324	☐	☐
CE	6" Dia. Recessed LED Downlight EM	☐	☐	18	Mfr. Spec[1]	2	☐	36	☐	☐
D	25.25" Wall Mounted LED Vanity	☐	☐	25	Mfr. Spec[1]	6	☐	150	☐	☐
						Total Designed Watts CONDITIONED SPACES:		7,109		

[1]NOTES: Authority Having Jurisdiction may ask for Luminaire cut sheets to confirm wattage used for compliance per §130.0(c) Wattage used must be the maximum rated for the luminaire, not the lamp.

G. TRACK LIGHTING

This Section Does Not Apply

H. INDOOR LIGHTING CONTROLS (Not Including PAFs)

*Table Instructions: Please include lighting controls for conditioned and unconditioned spaces in this table. When an option having a * is selected, the notes section of this table must be completed. The lighting controls section of the Compliance Summary Table on the first page will show "DOES NOT COMPLY" if the notes are left blank.*

Building Level Controls

01	02	03	
Mandatory Demand Response §130.1(e)	Shut-off Controls §130.1(c)	Field Inspector: Pass	Fail
Not Required- Building ≤ 0.5 W/SF	See Area Level Controls	☐	☐

Area Level Controls

04	05	06	07	08	09	10	11	12	
Area Description	Complete Building or Area Category Primary Function Area	Area Controls §130.1(a)	Multi-Level Controls §130.1(b)	Shut-Off Controls §130.1(c)	Primary/Skylit Daylighting §130.1(d)	Secondary Daylighting §140.6(d)	Interlocked Systems §140.6(a)1	Field Inspector: Pass	Fail
Multi-Purpose Room 100	Class, Lecture, Trg, Vocational	Manual ON/OFF	Dimmer	Vacancy	Exempt *	Exempt *	☐	☐	☐
Storage Room 102	Corridor, Restrm, Stair, Support	Manual ON/OFF	Dimmer	Vacancy	N/A	N/A	☐	☐	☐
Storage Room 103	Corridor, Restrm, Stair, Support	Manual ON/OFF	Dimmer	Vacancy	N/A	N/A	☐	☐	☐
Electronics Room 104	Elec, Mech, Telephone	Manual ON/OFF	Exempt *	Occ Sensor	N/A	N/A	☐	☐	☐

Table Continued

STATE OF CALIFORNIA
Indoor Lighting
NRCC-LTI-E (Created 3/18) CALIFORNIA ENERGY COMMISSION

CERTIFICATE OF COMPLIANCE	NRCC-LTI-E
Project Name: Our Lady of Assumption Church	Report Page: Page 4 of 9
Project Address: 100 Salinas Rd.	Date Prepared: 12/11/19

04	05	06	07	08	09	10	11	12	
Area Description	Complete Building or Area Category Primary Function Area	Area Controls §130.1(a)	Multi-Level Controls §130.1(b)	Shut-Off Controls §130.1(c)	Primary/Skylit Daylighting §130.1(d)	Secondary Daylighting §140.6(d)	Interlocked Systems §140.6(a)1	Field Inspector: Pass	Fail
Janitor Rm. 1 105	Corridor, Restrm, Stair, Support	Manual ON/OFF	Exempt *	Occ Sensor	N/A	N/A	☐	☐	☐
Storage Rm. 106	Corridor, Restrm, Stair, Support	Manual ON/OFF	Exempt *	Occ Sensor	N/A	N/A	☐	☐	☐
Womens 107	Corridor, Restrm, Stair, Support	Manual ON/OFF	Dimmer	Vacancy	N/A	N/A	☐	☐	☐
Mens 108	Corridor, Restrm, Stair, Support	Manual ON/OFF	Dimmer	Vacancy	N/A	N/A	☐	☐	☐
Office Lounge 109	Lounge	Manual ON/OFF	Dimmer	Vacancy	N/A	N/A	☐	☐	☐
Passover Liturgy 110	Religious Worship	Manual ON/OFF	Dimmer	Vacancy	N/A	N/A	☐	☐	☐
Maintenance Rm. 113	Corridor, Restrm, Stair, Support	Manual ON/OFF	Dimmer	Vacancy	N/A	N/A	☐	☐	☐
Storage 201	Corridor, Restrm, Stair, Support	Manual ON/OFF	Exempt *	Occ Sensor	N/A	N/A	☐	☐	☐
Storage 202	Corridor, Restrm, Stair, Support	Manual ON/OFF	Exempt *	Occ Sensor	N/A	N/A	☐	☐	☐
Office 1 203	Office (<= 250 square feet)	Manual ON/OFF	Dimmer	Vacancy	Exempt *	Exempt *	☐	☐	☐
Office 2 204	Office (<= 250 square feet)	Manual ON/OFF	Dimmer	Vacancy	Exempt *	Exempt *	☐	☐	☐
Office 3 205	Office (> 250 square feet)	Manual ON/OFF	Dimmer	Vacancy	Exempt *	Exempt *	☐	☐	☐
Office 4 206	Office (> 250 square feet)	Manual ON/OFF	Dimmer	Vacancy	Exempt *	Exempt *	☐	☐	☐
Office 5 207	Office (> 250 square feet)	Manual ON/OFF	Dimmer	Vacancy	Exempt *	Exempt *	☐	☐	☐
Lounge Room 209	Lounge	Manual ON/OFF	Dimmer	Vacancy	N/A	N/A	☐	☐	☐
Womens R.R. 210	Corridor, Restrm, Stair, Support	Manual ON/OFF	Dimmer	Vacancy	N/A	N/A	☐	☐	☐
Janitor Closet 211	Corridor, Restrm, Stair, Support	Manual ON/OFF	Exempt *	Occ Sensor	N/A	N/A	☐	☐	☐
Mens R.R. 212	Corridor, Restrm, Stair, Support	Manual ON/OFF	Dimmer	Vacancy	N/A	N/A	☐	☐	☐
Storage 213	Corridor, Restrm, Stair, Support	Manual ON/OFF	Exempt *	Occ Sensor	N/A	N/A	☐	☐	☐
Office 6 214	Office (> 250 square feet)	Manual ON/OFF	Dimmer	Vacancy	Exempt *	N/A	☐	☐	☐
Office 7 215	Office (> 250 square feet)	Manual ON/OFF	Dimmer	Vacancy	Exempt *	N/A	☐	☐	☐
Office/Lounge 216	Lounge	Manual ON/OFF	Dimmer	Vacancy	N/A	N/A	☐	☐	☐
Hallways	Corridor, Restrm, Stair, Support	Manual ON/OFF	Dimmer	Partial Off *	N/A	N/A	☐	☐	☐
Stairs	Corridor, Restrm, Stair, Support	Manual ON/OFF	Dimmer	Partial Off *	N/A	N/A	☐	☐	☐

*NOTES: Controls with a * require a note in the space below explaining how compliance is achieved.

EX: Conference 1: Primary/Skylight Daylighting: Exempt because less than 120 watts of general lighting; EXCEPTION 1 to §130.1(d)2

13 — Plan Sheet Showing Daylit Zones:

Janitor Rm. 1 105 Multi-Level: Exempt because less than 100 sq. ft.
Storage Rm. 106 Multi-Level: Exempt because less than 100 sq. ft.

STATE OF CALIFORNIA
Indoor Lighting
NRCC-LTI-E (Created 3/18) CALIFORNIA ENERGY COMMISSION

CERTIFICATE OF COMPLIANCE	NRCC-LTI-E
Project Name: Our Lady of Assumption Church	Report Page: Page 5 of 9
Project Address: 100 Salinas Rd.	Date Prepared: 12/11/19

Storage 201 Multi-Level: Exempt because less than 100 sq. ft.
Storage 202 Multi-Level: Exempt because less than 100 sq. ft.
Janitor Closet 211 Multi-Level: Exempt because less than 100 sq. ft.
Storage 213 Multi-Level: Exempt because less than 100 sq. ft.
Hallways Shut-Off: Dim to 50% when Unoccupied.
Stairs Shut-Off: Dim to 50% when Unoccupied.
Multi-Purpose Room 100 Daylighting: Exempt because lighting power density is 85% less of allowance.
Office 1 203 Daylighting: Exempt because lighting power density is 85% less of allowance.
Office 2 204 Daylighting: Exempt because lighting power density is 85% less of allowance.
Office 3 205 Daylighting: Exempt because lighting power density is 85% less of allowance.
Office 4 206 Daylighting: Exempt because lighting power density is 85% less of allowance.
Office 5 207 Daylighting: Exempt because lighting power density is 85% less of allowance.
Office 6 214 Daylighting: Exempt because lighting power density is 85% less of allowance.
Office 7 215 Daylighting: Exempt because lighting power density is 85% less of allowance.
Electronics Room 104 Multi-Level: Exempt because less than 100 sq. ft.

I. LIGHTING POWER ALLOWANCE: COMPLETE BUILDING OR AREA CATEGORY METHODS

Table Instructions: Complete the table for each area complying using the Complete Building or Area Category Methods per §140.6(b). Indicate if additional lighting power allowances per §140.6(c) or adjustments per §140.6(a) are being used.

Conditioned Spaces

01	02	03	04	05	06		
Area Description	Complete Building or Area Category Primary Function Area	Allowed Density (W/ft²)	Area (ft²)	Allowed Wattage (Watts)	Additional Allowances / Adjustments: Footnotes	PAF	Portable Ltg
Multi-Purpose Room 100	Class, Lecture, Trg, Vocational	1.2	3,216	3,859.2	☐	☐	☐
Storage Room 102	Corridor, Restrm, Stair, Support	0.6	140	84	☐	☐	☐
Storage Room 103	Corridor, Restrm, Stair, Support	0.6	140	84	☐	☐	☐
Electronics Room 104	Elec, Mech, Telephone	0.55	47	25.85	☐	☐	☐
Janitor Rm. 1 105	Corridor, Restrm, Stair, Support	0.6	60	36	☐	☐	☐
Storage Rm. 106	Corridor, Restrm, Stair, Support	0.6	20	12	☐	☐	☐
Womens 107	Corridor, Restrm, Stair, Support	0.6	65	39	☐	☐	☐

Table Continued

STATE OF CALIFORNIA
Indoor Lighting
NRCC-LTI-E (Created 3/18) CALIFORNIA ENERGY COMMISSION

CERTIFICATE OF COMPLIANCE	NRCC-LTI-E
Project Name: Our Lady of Assumption Church	Report Page: Page 6 of 9
Project Address: 100 Salinas Rd.	Date Prepared: 12/11/19

01	02	03	04	05	06		
Area Description	Complete Building or Area Category Primary Function Area	Allowed Density (W/ft²)	Area (ft²)	Allowed Wattage (Watts)	Additional Allowances / Adjustments: Footnotes	PAF	Portable Ltg
Mens 108	Corridor, Restrm, Stair, Support	0.6	65	39	☐	☐	☐
Office Lounge 109	Lounge	0.9	190	171	☐	☐	☐
Passover Liturgy 110	Religious Worship	1.5	225	337.5	☐	☐	☐
Maintenance Rm. 113	Corridor, Restrm, Stair, Support	0.6	350	210	☐	☐	☐
Storage 201	Corridor, Restrm, Stair, Support	0.6	58	34.8	☐	☐	☐
Storage 202	Corridor, Restrm, Stair, Support	0.6	58	34.8	☐	☐	☐
Office 1 203	Office (<= 250 square feet)	1	238	238	☐	☐	☐
Office 2 204	Office (<= 250 square feet)	1	248	248	☐	☐	☐
Office 3 205	Office (> 250 square feet)	0.75	305	228.75	☐	☐	☐
Office 4 206	Office (> 250 square feet)	0.75	265	198.75	☐	☐	☐
Office 5 207	Office (> 250 square feet)	0.75	319	239.25	☐	☐	☐
Lounge Room 209	Lounge	0.9	202	181.8	☐	☐	☐
Womens R.R. 210	Corridor, Restrm, Stair, Support	0.6	233	139.8	☐	☐	☐
Janitor Closet 211	Corridor, Restrm, Stair, Support	0.6	51	30.6	☐	☐	☐
Mens R.R. 212	Corridor, Restrm, Stair, Support	0.6	222	133.2	☐	☐	☐
Storage 213	Corridor, Restrm, Stair, Support	0.6	89	53.4	☐	☐	☐
Office 6 214	Office (> 250 square feet)	0.75	367	275.25	☐	☐	☐
Office 7 215	Office (> 250 square feet)	0.75	384	288	☐	☐	☐
Office/Lounge 216	Lounge	0.9	1,640	1,476	☐	☐	☐
Hallway	Corridor, Restrm, Stair, Support	0.6	1,674	1,004.4	☐	☐	☐
Stairs	Corridor, Restrm, Stair, Support	0.6	144	86.4	☐	☐	☐
		TOTAL:	11,015	9,788.75	See Tables J, K, R for detail		

J. POWER ADJUSTMENT: PORTABLE LIGHTING IN OFFICES

This Section Does Not Apply

K. ADDITIONAL LIGHTING ALLOWANCE: AREA CATEGORY METHOD FOOTNOTES

This Section Does Not Apply

STATE OF CALIFORNIA
Indoor Lighting
NRCC-LTI-E (Created 3/18) CALIFORNIA ENERGY COMMISSION

CERTIFICATE OF COMPLIANCE	NRCC-LTI-E
Project Name: Our Lady of Assumption Church	Report Page: Page 7 of 9
Project Address: 100 Salinas Rd.	Date Prepared: 12/11/19

L. TAILORED METHOD GENERAL LIGHTING POWER ALLOWANCE

This Section Does Not Apply

M. ADDITIONAL LIGHTING ALLOWANCE: TAILORED SPECIAL FUNCTION AREAS

This Section Does Not Apply

N. ADDITIONAL LIGHTING ALLOWANCE: TAILORED WALL DISPLAY

This Section Does Not Apply

O. ADDITIONAL LIGHTING ALLOWANCE: TAILORED FLOOR AND TASK LIGHTING

This Section Does Not Apply

P. ADDITIONAL LIGHTING ALLOWANCE: TAILORED ORNAMENTAL/SPECIAL EFFECTS

This Section Does Not Apply

Q. ADDITIONAL LIGHTING ALLOWANCE: TAILORED VERY VALUABLE MERCHANDISE

This Section Does Not Apply

R. POWER ADJUSTMENT: LIGHTING CONTROL CREDIT (PAF)

This Section Does Not Apply

S. RATED POWER REDUCTION COMPLIANCE BY SPACE

This Section Does Not Apply

STATE OF CALIFORNIA
Indoor Lighting
NRCC-LTI-E (Created 3/18) CALIFORNIA ENERGY COMMISSION

CERTIFICATE OF COMPLIANCE	NRCC-LTI-E
Project Name: Our Lady of Assumption Church	Report Page: Page 8 of 9
Project Address: 100 Salinas Rd.	Date Prepared: 12/11/19

T. DECLARATION OF REQUIRED CERTIFICATES OF INSTALLATION

Table Instructions: Selections have been made based on information provided in previous tables of this document. If any selection needs to be changed, please explain why in Table E. Additional Remarks. These documents must be provided to the building inspector during construction and can be found online at http://www.energy.ca.gov/2015publications/CEC-400-2015-033/appendices/forms/NRCI

YES	NO	Form/Title	Field Inspector: Pass	Fail
◉	○	NRCI-LTI-01-E - Must be submitted for all buildings	☐	☐
◉	○	NRCI-LTI-02-E - Must be submitted for a lighting control system, or for an Energy Management Control System (EMCS), to be recognized for compliance.	☐	☐
○	◉	NRCI-LTI-03-E - Must be submitted for a line-voltage track lighting integral current limiter, or for a supplementary overcurrent protection panel used to energize only line-voltage track lighting, to be recognized for compliance.	☐	☐
○	◉	NRCI-LTI-04-E - Must be submitted for two interlocked systems serving an auditorium, a convention center, a conference room, a multipurpose room, or a theater to be recognized for compliance.	☐	☐
○	◉	NRCI-LTI-05-E - Must be submitted for a Power Adjustment Factor (PAF) to be recognized for compliance.	☐	☐
○	◉	NRCI-LTI-06-E - Must be submitted for additional wattage installed in a video conferencing studio to be recognized for compliance.	☐	☐

U. DECLARATION OF REQUIRED CERTIFICATES OF ACCEPTANCE

Table Instructions: Selections have been made based on information provided in previous tables of this document. If any selection needs to be changed, please explain why in Table E. Additional Remarks. These documents must be provided to the building inspector during construction and must be completed through an Acceptance Test Technician Certification Provider (ATTCP). For more information visit: http://www.energy.ca.gov/title24/attcp/providers.html

YES	NO	Form/Title	Field Inspector: Pass	Fail
◉	○	NRCA-LTI-02-A - Must be submitted for occupancy sensors and automatic time switch controls.	☐	☐
○	◉	NRCA-LTI-03-A - Must be submitted for automatic daylight controls.	☐	☐
○	◉	NRCA-LTI-04-A - Must be submitted for demand responsive lighting controls.	☐	☐
○	◉	NRCA-LTI-05-A - Must be submitted for institutional tuning power adjustment factor (PAF).	☐	☐

STATE OF CALIFORNIA
Indoor Lighting
NRCC-LTI-E (Created 3/18) CALIFORNIA ENERGY COMMISSION

CERTIFICATE OF COMPLIANCE	NRCC-LTI-E
Project Name: Our Lady of Assumption Church	Report Page: Page 9 of 9
Project Address: 100 Salinas Rd.	Date Prepared: 12/11/19

DOCUMENTATION AUTHOR'S DECLARATION STATEMENT

Documentation Author Name:	Eldridge O. Bell	Documentation Author Signature:	(signature)
Company:	Aurum Consulting Engineers	Signature Date:	12/11/19
Address:	60 Garden Ct., Suite 210	CEA/ HERS Certification Identification (if applicable):	
City/State/Zip:	Monterey, CA 93940	Phone:	831-646-3330

RESPONSIBLE PERSON'S DECLARATION STATEMENT

I certify the following under penalty of perjury, under the laws of the State of California:

1. **The information provided on this Certificate of Compliance is true and correct.**
2. **I am eligible under Division 3 of the Business and Professions Code to accept responsibility for the building design or system design identified on this Certificate of Compliance (responsible designer)**
3. **The energy features and performance specifications, materials, components, and manufactured devices for the building design or system design identified on this Certificate of Compliance conform to the requirements of Title 24, Part 1 and Part 6 of the California Code of Regulations.**
4. **The building design features or system design features identified on this Certificate of Compliance are consistent with the information provided on other applicable compliance documents, worksheets, calculations, plans and specifications submitted to the enforcement agency for approval with this building permit application.**
5. **I will ensure that a completed signed copy of this Certificate of Compliance shall be made available with the building permit(s) issued for the building, and made available to the enforcement agency for all applicable inspections. I understand that a completed signed copy of this Certificate of Compliance is required to be included with the documentation the builder provides to the building owner at occupancy.**

Responsible Designer Name:	Eldridge O. Bell	Responsible Designer Signature:	(signature)
Company :	Aurum Consulting Engineers	Date Signed:	12/11/19
Address:	60 Garden Ct., Suite 210	License:	E17789
City/State/Zip:	Monterey, CA 93940	Phone:	831-646-3330

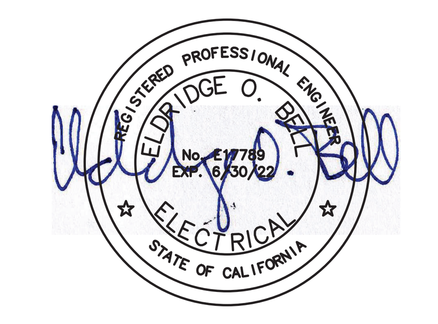

AURUM CONSULTING ENGINEERS MONTEREY BAY, INC.

Project No. 17399.00

60 Garden Court • Suite 210 • Monterey, CA 93940
T.831.646.3330 • F.831.646.3336 • www.acemb.com

These drawings are instruments of service and are the property of AURUM CONSULTING ENGINEERS MONTEREY BAY, INC. All designs and other information in the drawings are for use on the specified project and shall not be used otherwise without the expressed written permission of AURUM CONSULTING ENGINEERS MONTEREY BAY, INC.

JOB No:

DESCRIPTION: DATE: REV:

APN: 117-323-011-000

OUR LADY OF ASSUMPTION CHURCH
100 SALINAS ROAD
WATSONVILLE, CA

Sheet Title: CALIFORNIA ENERGY COMPLIANCE TITLE 24 - BUILDING INTERIOR

and associates
230 Capitol St
Salinas, CA. 93901
P (831)771-2802
F (831)771-2818

Copyright Notice:

E 0.2

G:\Projects\17Jobs\17399.00 Our Lady of Assumption Church\Dwgs01\17399E0.2.dwg, 9/29/2021 4:47:06 PM, elias, AutoCAD PDF (General Documentation).pc3

STATE OF CALIFORNIA
Outdoor Lighting
NRCC-LTO-E (Created 9/17) — CALIFORNIA ENERGY COMMISSION

CERTIFICATE OF COMPLIANCE	NRCC-LTO-E
This document is used to demonstrate compliance with requirements in §110.9, §130.0, §130.2, §140.7, and §141.0(b)2L for outdoor lighting scopes using the prescriptive path.	
Project Name: Our Lady of Assumption Church	Report Page: Page 1 of 6
Project Address: 100 Salinas Rd.	Date Prepared: 12/12/19

A. GENERAL INFORMATION

01	Project Location (city)	Watsonville	04	Total Illuminated Hardscape Area (ft^2)	1,951
02	Climate Zone	3			
03	Outdoor Lighting Zone per Title 24, Part 1 §10-114 or as designated by Authority Having Jurisdiction (AHJ):				
☐ LZ-0: Very Low - Undeveloped Parkland		☐ LZ-2: Moderate - Rural Areas	☐ LZ-4: High - Must be reviewed by CA Energy Commission for Approval		
☐ LZ-1: Low - Developed Parkland		☑ LZ-3: Moderately High - Urban Areas			

B. PROJECT SCOPE

Table Instructions: Include any outdoor lighting systems that are within the scope of the permit application and are demonstrating compliance using the prescriptive path outlined in §140.7 or §141.0(b)2L for alterations.

My project consists of:

01	02
☐ New Lighting System	Must Comply with Allowances from §140.7.
☑ Altered Lighting System	Is your alteration increasing the connected lighting load (Watts)? ◉ Yes ◯ No

Please proceed to Table F. Outdoor Lighting Fixture Schedule to define the project's luminaires.

[1] FOOTNOTES: % of Existing Luminaires Being Altered = (Sum Total of Luminaires Being Added or Altered / Existing Luminaires within the Scope of the Permit Application) x 100

C. COMPLIANCE RESULTS

Table Instructions: If any cell on this table says "DOES NOT COMPLY" or "COMPLIES with Exceptional Conditions" refer to Table D. for guidance.

Calculation of Total Allowed Lighting Power (Watts) §140.7 or §141.0(b)2L													**Compliance Results**			
01		02		03		04		05		06		07		08	09
General Hardscape Allowance §140.7(d)1	+	Per Application §140.7(d)2	+	Sales Frontage §140.7(d)2	+	Ornamental §140.7(d)2	+	Per Specific Area §140.7(d)2	OR	Existing Power §141.0(b)2L	=	**Total Allowed** (Watts)	≥	**Total Actual** (Watts)	**07 Must be ≥ 08**
(See Table I)		(See Table J)		(See Table K)		(See Table L)		(See Table M)		(See Table N)				(See Table F)	
747.14	+	105	+		+		+		OR		=	852.14	≥	495	**COMPLIES**
Cutoff Compliance (See Table G for Details)												**Not Applicable**			
Controls Compliance (See Table H for Details)												**COMPLIES**			

STATE OF CALIFORNIA
Outdoor Lighting
NRCC-LTO-E (Created 9/17) — CALIFORNIA ENERGY COMMISSION

CERTIFICATE OF COMPLIANCE	NRCC-LTO-E
Project Name: Our Lady of Assumption Church	Report Page: Page 2 of 6
Project Address: 100 Salinas Rd.	Date Prepared: 12/12/19

D. EXCEPTIONAL CONDITIONS

This table is auto-filled with uneditable comments because of selections made or data entered in tables throughout the form.

No exceptional conditions apply to this project.

E. ADDITIONAL REMARKS

This table includes remarks made by the permit applicant to the Authority Having Jurisdiction.

F. OUTDOOR LIGHTING FIXTURE SCHEDULE

Table Instructions: For new or altered lighting systems demonstrating compliance with §140.7 (ie Table I has expanded for input), include all luminaires being installed and any existing luminaires remaining or being moved within the spaces covered by the permit application in the Table below. For altered lighting systems using the Existing Power method per §141.0(b)2L (ie Table N has expanded for input), include only new luminaires being installed and replacement luminaires being installed as part of the project scope (ie, do not include existing luminaires remaining or existing luminaires being moved).

Designed Wattage:

01	02	03	04	05	06	07	08	09	10	
Name or Item Tag	Complete Luminaire Description	Watts per luminaire[1]	How Wattage is determined	Total number luminaires	Luminaire Status[2]	Excluded per §140.7(a)	Design Watts	Cutoff Req. > 150W §130.2(b)[3]	Field Inspector Pass	Field Inspector Fail
XA	Wall Mount LED	55	Mfr. Spec[1]	6	New	☐	330		☐	☐
XAE	Wall Mount LED EM	55	Mfr. Spec[1]	3	New	☐	165		☐	☐
						Total Designed Watts:	**495**			

* NOTES: Selections with a * require a note in the space below explaining how compliance is achieved.
EX: Luminaire is lighting a statue; EXCEPTION 2 to §130.2(b).

[1] FOOTNOTES: Authority Having Jurisdiction may ask for Luminaire cut sheets to confirm wattage used for compliance per §130.0(c)
[2] Select "New" for new luminaires in a new outdoor lighting project or for added luminaires in an alteration. Select "Altered" for replacement luminaires in an alteration. Select "Existing to Remain" for existing luminaires within the project scope that are not being altered and are remaining. Select "Existing Reinstalled" for existing luminaires which are being removed and reinstalled as part of the project scope
[3] Compliance with mandatory cutoff requirements is required for luminaires with wattage > 150 Watts unless exempted by §130.2(b).

G. CUTOFF REQUIREMENTS (BUG)

This Section Does Not Apply

STATE OF CALIFORNIA
Outdoor Lighting
NRCC-LTO-E (Created 9/17) — CALIFORNIA ENERGY COMMISSION

CERTIFICATE OF COMPLIANCE	NRCC-LTO-E
Project Name: Our Lady of Assumption Church	Report Page: Page 3 of 6
Project Address: 100 Salinas Rd.	Date Prepared: 12/12/19

H. OUTDOOR LIGHTING CONTROLS

Table Instructions: Complete this table demonstrating compliance with controls requirements for all new or altered luminaires installed as part of the permit application. For alteration projects, luminaires which are existing to remain (ie untouched) and luminaires which are removed and reinstalled (wiring only) do not need to be included in this table even if they are within the spaces covered by the permit application.
*When an option having a * is selected, the notes section of this table must be completed. The lighting controls section of the Compliance Summary Table on the first page will show "DOES NOT COMPLY" if the notes are left blank. For each requirement in columns 02 through 07, do not leave the field blank, instead select NA or Exempt* from the dropdown list to indicate not applicable or an exemption.*

Mandatory Controls

01	02	03	04	05	06	07	08	
Area Description	Motion Sensor: Incandescent>100W §130.2(a)	Shut-Off §130.2(c)1	Auto-Schedule §130.2(c)2	Motion Sensor §130.2(c)3	Sales Frontage §130.2(c)4	Façade, Ornament, Outdoor Dining §130.2(c)5	Field Inspector Pass	Field Inspector Fail
Pedestrian Walkway	NA: No Incand>100W	Astronomical Timer	Yes	Yes	NA: No Sales Front Ltg	No Applicable Ltg	☐	☐

*NOTES: Controls with a * require a note in the space below explaining how compliance is achieved.
EX: Not permitted by health & safety to be turned off; EXCEPTION 1 to §130.2(c).

I. LIGHTING POWER ALLOWANCE (per §140.7)

Table Instructions: Please complete this table for areas using the allowance calculations per §140.7. General Hardscape Allowance is per Table 140.7-A while "Use it or lost it" Allowances are per Table 140.7-B. Indicate which allowances are being used to expand sections for user input. Luminaires that qualify for one of the "Use it or lose it" allowances shall not qualify for another "Use it or lose it" allowance.

01				
	"Use it or lose it" Allowance (Watts)			
☑ General Hardscape Allowance	☑ Per Application	☐ Sales Frontage	☐ Ornamental	☐ Per Specific Area
Table I (below)	Table J	Table K	Table L	Table M

Calculated General Hardscape Lighting Power Allowance per Table 140.7-A

02	03	04	05	06	07	08	09
	Area Wattage Allowance (AWA)			Linear Wattage Allowance (LWA)			
Area Description	Illuminated Area (ft^2)	Allowed Density (W/ft^2)	Area Allowance (Watts)	Perimeter Length (lf)	Allowed Density (W/lf)	Linear Allowance (Watts)	Total General AWA + LWA (Watts)
Pedestrian Walkway	1,951	0.04	78.04	426	0.35	149.1	227.14
						Initial Wattage Allowance for Entire Site (Watts):	**520**
						Total General Hardscape Allowance (Watts):	**747.14**

STATE OF CALIFORNIA
Outdoor Lighting
NRCC-LTO-E (Created 9/17) — CALIFORNIA ENERGY COMMISSION

CERTIFICATE OF COMPLIANCE	NRCC-LTO-E
Project Name: Our Lady of Assumption Church	Report Page: Page 4 of 6
Project Address: 100 Salinas Rd.	Date Prepared: 12/12/19

J. LIGHTING ALLOWANCE: PER APPLICATION

Table Instructions: Please complete this table for areas using the wattage allowance per application from Table-140.7-B.

01	02	03	04	05	06	07	08	09	10
		CALCULATED ALLOWANCE (Watts)			DESIGN WATTS				
Area Description	Application per Table 140.7-B[1]	# of Locations	Allowance per Location[2] (Watts)	Extra Allowance (Watts)	Luminaire Name or Item Tag	Watts per Luminaire	# of Luminaires	Design Watts	Additional Allowance (Watts)
Building	Bldg Entrance/ Exit	3	35	105	XAE	55	3	165	
							Total Design Watts for this Area:	165	105
								Total Allowance (Watts) All Areas:	**105**

[1] FOOTNOTES: Primary entrance applications are only available for senior care facilities, police stations, hospitals, fire stations, and emergency vehicle facilities.
[2] The Allowance per Location for ATMs is 250W for the first ATM and 70W for each additional per Table 140.7-B.

K. LIGHTING ALLOWANCE: SALES FRONTAGE

This Section Does Not Apply

L. LIGHTING ALLOWANCE: ORNAMENTAL

This Section Does Not Apply

M. LIGHTING ALLOWANCE: PER SPECIFIC AREA

This Section Does Not Apply

N. EXISTING CONDITIONS POWER ALLOWANCE (alterations only)

This Section Does Not Apply

STATE OF CALIFORNIA
Outdoor Lighting
NRCC-LTO-E (Created 9/17) — CALIFORNIA ENERGY COMMISSION

CERTIFICATE OF COMPLIANCE	NRCC-LTO-E
Project Name: Our Lady of Assumption Church	Report Page: Page 5 of 6
Project Address: 100 Salinas Rd.	Date Prepared: 12/12/19

O. DECLARATION OF REQUIRED CERTIFICATES OF INSTALLATION

Table Instructions: Selections have been made based on information provided in previous tables of this document. If any selection needs to be changed, please explain why in Table E. Additional Remarks. These documents must be provided to the building inspector during construction and can be found online at http://www.energy.ca.gov/2015publications/CEC-400-2015-033/appendices/forms/NRCI

YES	NO	Form/Title	Field Inspector Pass	Field Inspector Fail
◉	◯	NRCI-LTO-01-E - Must be submitted for all buildings.	☐	☐
◉	◯	NRCI-LTO-02-E - Must be submitted for a lighting control system; or for an Energy Management Control System (EMCS), to be recognized for compliance.	☐	☐

P. DECLARATION OF REQUIRED CERTIFICATES OF ACCEPTANCE

Table Instructions: Selections have been made based on information provided in previous tables of this document. If any selection needs to be changed, please explain why in Table E. Additional Remarks. These documents must be provided to the building inspector during construction and must be completed through an Acceptance Test Technician Certification Provider (ATTCP). For more information visit: http://www.energy.ca.gov/title24/attcp/providers.html

YES	NO	Form/Title	Field Inspector Pass	Field Inspector Fail
◉	◯	NRCA-LTO-02-A - Must be submitted for all outdoor lighting controls except for alterations where controls area added to ≤ 20 luminaires.	☐	☐

STATE OF CALIFORNIA
Outdoor Lighting
NRCC-LTO-E (Created 9/17) — CALIFORNIA ENERGY COMMISSION

CERTIFICATE OF COMPLIANCE	NRCC-LTO-E
Project Name: Our Lady of Assumption Church	Report Page: Page 6 of 6
Project Address: 100 Salinas Rd.	Date Prepared: 12/12/19

DOCUMENTATION AUTHOR'S DECLARATION STATEMENT

Documentation Author Name:	Eldridge O. Bell	Documentation Author Signature:	Eldridge O. Bell
Company:	Aurum Consulting Engineers	Signature Date:	12/12/19
Address:	60 Garden Ct., Suite 210	CEA/ HERS Certification Identification (if applicable):	
City/State/Zip:	Monterey, CA 93940	Phone:	831-646-3330

RESPONSIBLE PERSON'S DECLARATION STATEMENT
I certify the following under penalty of perjury, under the laws of the State of California:
1. **The information provided on this Certificate of Compliance is true and correct.**
2. **I am eligible under Division 3 of the Business and Professions Code to accept responsibility for the building design or system design identified on this Certificate of Compliance (responsible designer)**
3. **The energy features and performance specifications, materials, components, and manufactured devices for the building design or system design identified on this Certificate of Compliance conform to the requirements of Title 24, Part 1 and Part 6 of the California Code of Regulations.**
4. **The building design features or system design features identified on this Certificate of Compliance are consistent with the information provided on other applicable compliance documents, worksheets, calculations, plans and specifications submitted to the enforcement agency for approval with this building permit application.**
5. **I will ensure that a completed signed copy of this Certificate of Compliance shall be made available with the building permit(s) issued for the building, and made available to the enforcement agency for all applicable inspections. I understand that a completed signed copy of this Certificate of Compliance is required to be included with the documentation the builder provides to the building owner at occupancy.**

Responsible Designer Name:	Eldridge O. Bell	Responsible Designer Signature:	Eldridge O. Bell
Company :	Aurum Consulting Engineers	Date Signed:	12/12/19
Address:	60 Garden Ct., Suite 210	License:	E17789
City/State/Zip:	Monterey, CA 93940	Phone:	831-646-3330

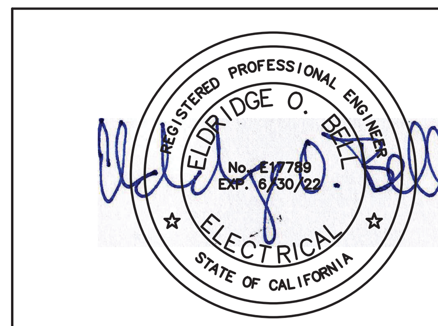

AURUM CONSULTING ENGINEERS MONTEREY BAY, INC.
Project No. 17399.00
60 Garden Court • Suite 210 • Monterey, CA 93940
T.831.646.3330 • F.831.646.3336 • www.acemb.com

These drawings are instruments of service and are the property of AURUM CONSULTING ENGINEERS MONTEREY BAY, INC. All designs and other information in the drawings are for use on the specified project and shall not be used otherwise without the expressed written permission of AURUM CONSULTING ENGINEERS MONTEREY BAY, INC.

JOB No:

DESCRIPTION: | DATE: | REV:

APN: 117-323-011-000

OUR LADY OF ASSUMPTION CHURCH
100 SALINAS ROAD
WATSONVILLE, CA

Sheet Title:
CALIFORNIA ENERGY COMPLIANCE TITLE 24 - BUILDING EXTERIOR

Muñoz and associates
230 Capitol St
Salinas, CA. 93901
P (831)771-2802
F (831)771-2818

Copyright Notice:

E 0.3

G:\Projects\17Jobs\17399.00 Our Lady of Assumption Church\Dwgs01\17399E0.3.dwg, 9/29/2021 4:47:49 PM, elias,
AutoCAD PDF (General Documentation).pc3

PANELBOARD SCHEDULES

PANEL M

Voltage:	120/240V, 1ø
Wire:	3W
Type:	NEMA 1
Mains:	M.L.O.

1 2

Bussing:	100A
Feed:	TOP
Mounting:	SURFACE
A.I.C.	10,000

Load	A	B	Bkr	Ck	ab	Ck	Bkr	A	B	Load
IU-1 THROUGH IU-5	530		15/2	1		2	15/2	425		IU-2.1, IU-2.3, IU-2.4 & IU-2.5
IU-1 THROUGH IU-5		530		3		4			425	IU-2.1, IU-2.3, IU-2.4 & IU-2.5
IU-6 THROUGH IU-7	210		15/2	5		6	15/2	315		IU-2.2, IU-2.6 & IU-2.7
IU-6 THROUGH IU-7		210		7		8			315	IU-2.2, IU-2.6 & IU-2.7
EF-1	670		15/1	9		10	20/1	300		WATER HEATER CIRC. PUMP
EF-2 & EF-3		100	15/1	11		12	15/1		600	EF-2.1 & EF-2.2
ERV-1	500		15/1	13		14	100/2	8735		RTU-1
ELEVATOR CONTROLS		100	20/1	15		16			8735	RTU-1
MACHINE ROOM RECEPT./LTG.	200		20/1	17		18				
ELEVATOR PIT RECEPT./LTG.		200	20/1	19		20				
				21		22				
				23		24				
				25		26				
				27		28				
				29		30				
	2110	1140						9775	10075	

1 SUBMITTAL SHALL MATCH EXACT BREAKER LOCATIONS SHOWN.
2 LABEL PANEL FOR SHORT CIRCUIT AMPS AVAILABLE PER CEC 110-24.

KVA Phase A	11.9
KVA Phase B	11.2

Total Load KVA	23.1
Total Load Amperes	96

PANEL C

Voltage:	120/240V, 1ø
Wire:	3W
Type:	NEMA 1
Mains:	M.L.O.

1 2

Bussing:	100A
Feed:	TOP
Mounting:	SURFACE
A.I.C.	10,000

Load	A	B	Bkr	Ck	ab	Ck	Bkr	A	B	Load
LIGHTING - FIRST FLOOR	1515		20/1	1		2	20/1	1824		LTG. - INTERIOR
LIGHTING - FIRST FLOOR		715	20/1	3		4	20/1		1163	LTG. - INTERIOR
EXTERIOR LIGHTING	385		20/1	5		6	20/1			SPARE
SPARE			20/1	7		8	20/1			SPARE
SPARE			20/1	9		10	20/1			SPARE
SPARE			20/1	11		12	20/1			SPARE
SPACE ONLY			-	13		14	-			SPACE ONLY
SPACE ONLY			-	15		16	-			SPACE ONLY
SPACE ONLY			-	17		18	-			SPACE ONLY
SPACE ONLY			-	19		20	-			SPACE ONLY
SPACE ONLY			-	21		22	-			SPACE ONLY
SPACE ONLY			-	23		24	-			SPACE ONLY
	1900	715						1824	1163	

1 SUBMITTAL SHALL MATCH EXACT BREAKER LOCATIONS SHOWN.
2 LABEL PANEL FOR SHORT CIRCUIT AMPS AVAILABLE PER CEC 110-24.

KVA Phase A	3.7
KVA Phase B	1.9

Total Load KVA	5.6
Total Load Amperes	23

PANEL DPB

Voltage:	120/240V, 1ø
Wire:	3W
Type:	NEMA 1
Mains:	400A

1 4

Bussing:	__A
Feed:	BOTTOM
Mounting:	SURFACE
3 A.I.C.	SERIES RATED

Load	A	B	Bkr	Ck	ab	Ck	Bkr	A	B	Load
SOLAR			50/2	1		2	20/1			SPARE
SOLAR				3		4	20/1			SPARE
SPARE			20/1	5		6	-			SPACE ONLY
SPARE			20/1	7		8	20/1			INVERTER PANEL
PANEL "B"	13340		100/2	9		10				SPACE ONLY
PANEL "B"		12720		11		12				SPACE ONLY
PANEL "C"	3724		50/2	13		14				SPACE ONLY
PANEL "C"		1878		15		16				SPACE ONLY
PANEL "M"	1935		100/2	17		18				SPACE ONLY
PANEL "M"		1565		19		20				SPACE ONLY
SPACE ONLY			-	21		22				SPACE ONLY
SPACE ONLY			-	23		24				SPACE ONLY
SPACE ONLY			-	25		26				SPACE ONLY
SPACE ONLY			-	27		28				SPACE ONLY
SPACE ONLY			-	29		30				SPACE ONLY
SPACE ONLY			-	31		32				SPACE ONLY
SPACE ONLY			-	33		34				SPACE ONLY
SPACE ONLY			-	35		36				SPACE ONLY
SPACE ONLY			-	37		38	100/2			PANEL A1
SPACE ONLY			-	39		40				PANEL A1
SPACE ONLY			-	41		42				SPACE ONLY
	18999	16163						0	0	

1 SUBMITTAL SHALL MATCH EXACT BREAKER LOCATIONS SHOWN.
2 PROVIDE & INSTALL LOCK-ON DEVICE.
3 SERIES RATED TO ___AMP WITH THE PANEL MAIN OR NEXT UPSTREAM BREAKER FOR MAIN LUG PANEL.
4 LABEL PANEL FOR SHORT CIRCUIT AMPS AVAILABLE PER CEC 110-24.

KVA Phase A	19.0
KVA Phase B	16.2

Total Load KVA	35.2
Total Load Amperes	147

PANEL B

Voltage:	120/240V, 1ø
Wire:	3W
Type:	NEMA 1
Mains:	M.L.O.

1 2

Bussing:	100A
Feed:	TOP
Mounting:	SURFACE
A.I.C.	10,000

Load	A	B	Bkr	Ck	ab	Ck	Bkr	A	B	Load
RECEPT - MULTI PURPOSE RM 100	900		20/1	1		2	20/1	1260		RECEPT - OFFICE 203
RECEPT - MULTI PURPOSE RM 100		720	20/1	3		4	20/1		1260	RECEPT - OFFICE 204
RECEPT - MULTI PURPOSE RM 100	720		20/1	5		6	20/1	1260		RECEPT - OFFICE 205
RECEPT - MULTI PURPOSE RM 100		720	20/1	7		8	20/1		1260	RECEPT - OFFICE 206
RECEPT - PASSOVER LITURGY 109	720		20/1	9		10	20/1	1260		RECEPT - OFFICE 207
RECEPT - OFFICE/LOUNGE 108		720	20/1	11		12	20/1		1260	RECEPT - OFFICE 217
RECEPT - OFFICE/LOUNGE 108	500		20/1	13		14	20/1	1440		RECEPT - OFFICE 216
RECEPT - MAINTENACE ROOM 110		720	20/1	15		16	20/1		900	RECEPT - OFFICE/LOUNGE 219
CHAIR LIFT	500		30/1	17		18	20/1	900		RECEPT - OFFICE/LOUNGE 219
RECEPT - MAINTENACE ROOM 110		720	20/1	19		20	20/1		720	RECEPT - OFFICE/LOUNGE 219
RECEPT - MAINTENACE ROOM 110	540		20/1	21		22	20/1	720		RECEPT - OFFICE/LOUNGE 219
RECEPT - STAGE		900	20/1	23		24	20/1		1000	LOUNGE ROOM COUNTER
RECEPT - ELECTRONICS RM 103	720		20/1	25		26	20/1	1000		LOUNGE ROOM COUNTER
RECEPT - JANITORS RM/RESTROOM 106 & 107		540	20/1	27		28	20/1		720	LOUNGE ROOM
RECEPT - PROJECTOR MULTI PURPOSE	180		20/2	29		30	20/1	540		WOMEN 209
PROJECTION SCREEN		200		31		32	20/1		360	MEN 211
RECEPT - EXTERIOR	180		20/1	33		34	20/1			SPARE
SPARE			20/1	35		36	20/1			SPARE
SPARE			20/1	37		38	20/1			SPARE
SPARE			20/1	39		40	20/1			SPARE
SPARE			20/1	41		42	20/1			SPARE
	4960	5240						8380	7480	

1 SUBMITTAL SHALL MATCH EXACT BREAKER LOCATIONS SHOWN.
2 LABEL PANEL FOR SHORT CIRCUIT AMPS AVAILABLE PER CEC 110-24.

KVA Phase A	13.3
KVA Phase B	12.7

Total Load KVA	26.1
Total Load Amperes	109

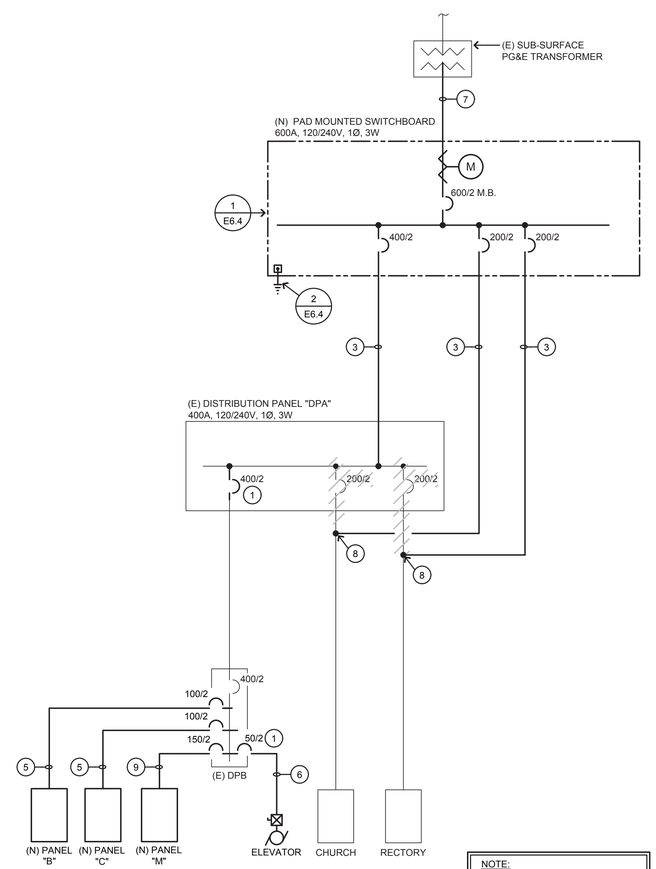

NOTE:
UNLESS OTHERWISE NOTED, ALL EQUIPMENT SHOWN IS EXISTING TO REMAIN.

1 SINGLE LINE DIAGRAM
NO SCALE

DETAIL NOTES:

1. REPLACE EXISTING BREAKER WITH NEW; NEW BREAKER SHALL MATCH EXISTING IN TYPE AND AIC RATING.
2. DEMOLISH WALL MOUNTED METER/MAIN PER GENERAL DEMOLITION NOTES ON SHEET E3.1.
3. 3 ½" C., 3 #500kcm & 1 #2 GND.
4. 2" C., 3 #3/0 & 1 #6 GND.
5. 1 ¼"C., 3 #2 & 1 #8 GND.
6. 1" C., 3 #6 & 1 #10 GND.
7. (2) 4" C.O. FOR PG&E SECODARY FEEDERS.
8. INTERCEPT EXISTING FEEDERS, SEE ELECTRICAL SITE ON SHEET E2.1 FOR REQUIRED WORK.
9. 1½"C., 3 #1/0 & 1 #6 GND.

SINGLE LINE DIAGRAM LEGEND

	(DEMOLISH)
	(EXISTING)
	(NEW)
	(E) FLOOR/PAD MOUNTED EQUIPMENT
	(N) FLOOR/PAD MOUNTED EQUIPMENT

REGISTERED PROFESSIONAL ENGINEER
ELDRIDGE O. BELL
No. E 18780
Exp. 6/30/22
ELECTRICAL
STATE OF CALIFORNIA

AURUM CONSULTING ENGINEERS
MONTEREY BAY, INC.

Project No. 17399.00

60 Garden Court • Suite 210 • Monterey, CA 93940
T.831.646.3330 • F.831.646.3336 • www.acemb.com

These drawings are instruments of service and are the property of AURUM CONSULTING ENGINEERS MONTEREY BAY, INC. All designs and other information in the drawings are for use on the specified project and shall not be used otherwise without the expressed written permission of AURUM CONSULTING ENGINEERS MONTEREY BAY, INC.

JOB No:

REV:	DATE:	DESCRIPTION:

APN:
117-323-011-000

OUR LADY OF ASSUMPTION CHURCH
100 SALINAS ROAD
WATSONVILLE, CA

Sheet Title:
ELECTRICAL PANELBOARD SHEDULES & SINGLE LINE DIAGRAM

Mesa and associates
230 Capitol St
Salinas, CA. 93901
P (831) 771-2802
F (831) 771-2812

Copyright Notice:

E
1.1

G:\Projects\17399\17399.00 Our Lady of Assumption Church\Dwgs\E\17399E1.1.dwg, 9/29/2021 4:48:21 PM, ellis,
AutoCAD PDF (General Documentation).pc3

NOTES:

A. CONTRACTOR SHALL LOCATE ALL (E) UNDERGROUND UTILITIES PRIOR TO TRENCHING AND TAKE CAUTION TO AVOID DAMAGE DURING TRENCHING. HAND TRENCH IF NECESSARY. CONTRACTOR SHALL MAKE ALL REPAIRS TO DAMAGED UTILITIES AT NO CHARGE TO OWNER.

B. ALL UTILITIES (PG&E, AT&T AND CATV) ARE SHOWN IN SCHEMATIC FORM ONLY. CONTRACTOR SHALL VERIFY EXACT REQUIREMENTS WITH UTILITY COMPANY ENGINEERED DRAWINGS PRIOR TO START OF CONSTRUCTION AND PROVIDE FACILITIES ACCORDINGLY.

SHEET NOTES

1. EXISTING PG&E SUB-SURFACE TRANSFORMER.
2. EXISTING UNDER GROUND PG&E PRIMARY AND SECONDARY CONDUITS.
3. EXISTING PG&E IN-GRADE PULLBOX.
4. NEW PG&E SECONDARY.
5. SEE SINGLE LINE DIAGRAM 1/E1.1 FOR FEEDER SIZE.
6. SHALL BE DEMOLISHED AS PART OF NEW ELECTRICAL SERVICE UPGRADE.
7. SHALL BE RECONNECTED TO NEW ELECTRICAL SERVICE, SEE SINGLE LINE DIAGRAM 1/E1.1 FOR FEEDER SIZE.

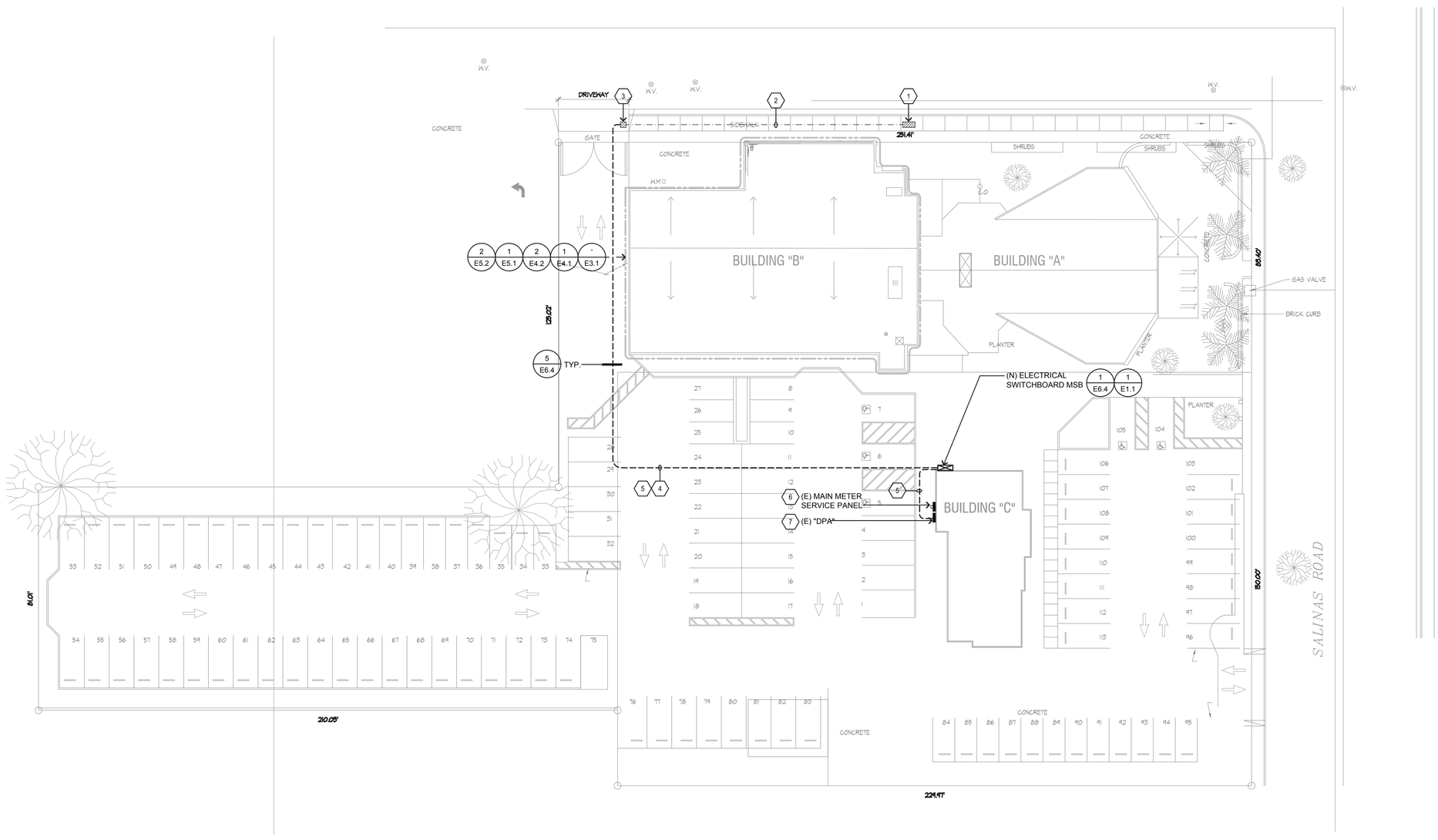

REGISTERED PROFESSIONAL ENGINEER
ELDRIDGE O. BELL
No. E 17789
Exp. 12/30/22
ELECTRICAL
STATE OF CALIFORNIA

AURUM CONSULTING ENGINEERS MONTEREY BAY, INC.

Project No. 17399.00

60 Garden Court • Suite 210 • Monterey, CA 93940
T.831.646.3330 • F.831.646.3336 • www.acemb.com

These drawings are instruments of service and are the property of AURUM CONSULTING ENGINEERS MONTEREY BAY, INC. All designs and other information in the drawings are for use on the specified project and shall not be used otherwise without the expressed written permission of AURUM CONSULTING ENGINEERS MONTEREY BAY, INC.

JOB No:

REV:	DATE:	DESCRIPTION:

APN:
117-323-011-000

OUR LADY OF ASSUMPTION CHURCH
100 SALINAS ROAD
WATSONVILLE, CA

Sheet Title:
ELECTRICAL SITE PLAN

and associates
230 Capitol St.
Salinas, CA. 93901
P (831) 772-2292
F (831) 771-2818

Copyright Notice:

E
2.1

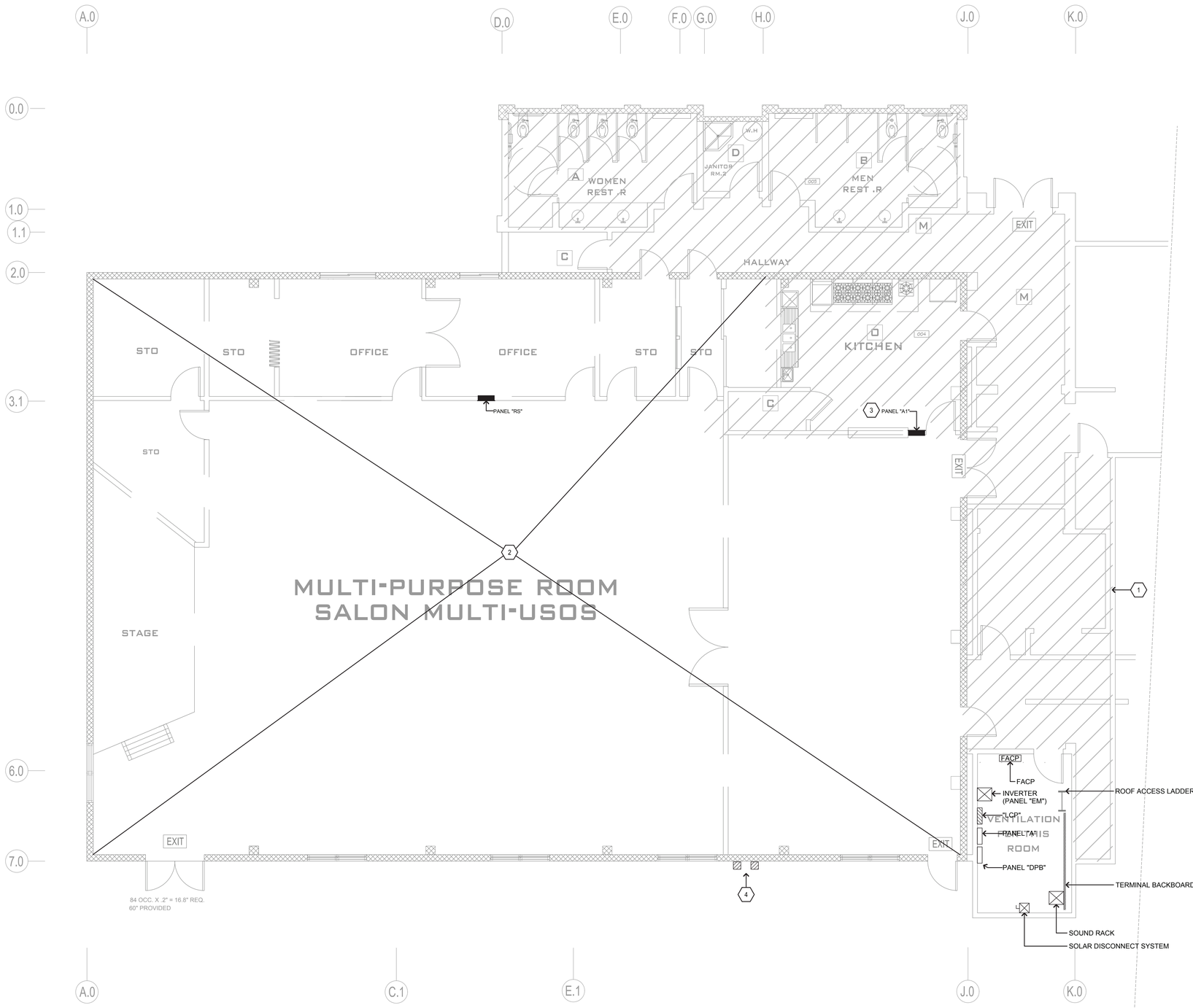

SHEET NOTES

1. UNLESS OTHERWISE NOTED, NO ELECTRICAL DEMOLITION WORK IN THIS AREA.
2. UNLESS OTHERWISE NOTED, CONTRACTOR SHALL DEMOLISH ALL ELECTRICAL DEVICES, EQUIPMENT AND LIGHTING PER GENERAL DEMOLITION NOTES ON THIS SHEET.
3. PANEL SHALL REMAIN.
4. DEMOLISH SURFACE MOUNTED PULL CANS AND JUNCTION BOXES, COMPLETE PER GENERAL DEMOLITION NOTES THIS SHEET.

GENERAL DEMOLITION NOTES

A. CONTRACTOR SHALL FIELD VERIFY EXTENT OF ELECTRICAL DEMOLITION AND QUANTITIES OF ELECTRICAL TO BE REMOVED AS DICTATED BY THE REQUIREMENTS OF THE PROJECT.

B. REMOVAL SHALL INCLUDE WIRING, RACEWAY, BOXES, SWITCHES, LIGHT FIXTURES, ETC. AS INDICATED ON THE PLANS AND AS REQUIRED BY THESE DEMOLITION NOTES.

C. RACEWAYS ASSOCIATED WITH ELECTRICAL BEING DEMOLISHED WHICH ARE CONCEALED IN EXISTING REMAINING WALLS MAY BE ABANDONED IN PLACE. REMOVE WIRING FROM CONDUIT.

D. RACEWAYS ASSOCIATED WITH ELECTRICAL BEING DEMOLISHED WHICH ARE EXPOSED SHALL BE REMOVED.

E. WHERE REMOVAL OF EQUIPMENT OR WIRING IS INDICATED, IT SHALL INCLUDE ALL ASSOCIATED WIRING BACK TO LAST ACTIVE REMAINING OUTLET, DEVICE, FIXTURE OR PANEL.

F. ELECTRICAL CONTRACTOR SHALL INSURE THAT ALL REMAINING ACTIVE CIRCUITS, DEVICES, OUTLETS, LIGHT FIXTURES, ETC. HAVE NOT BEEN DISCONNECTED OR MADE INOPERATIVE DURING DEMOLITION. ELECTRICAL CONTRACTOR SHALL RESTORE ALL INTERRUPTED OR DISCONNECTED CIRCUITS TO OPERATION.

G. ELECTRICAL CONTRACTOR SHALL REMOVE AND DISPOSE OF ALL REMOVED ELECTRICAL EQUIPMENT AND MATERIAL.

H. NO REMOVED EQUIPMENT OR MATERIAL SHALL BE REUSED AS PART OF NEW WORK, U.O.N.

I. EXISTING REMAINING CONCEALED RACEWAYS MAY BE REUSED FOR NEW WORK PROVIDED THEY MEET ALL REQUIREMENTS OF THE SPECIFICATION FOR NEW WORK.

J. EXISTING FLUSH OUTLETS MAY BE REUSED FOR NEW WORK PROVIDED THEY MEET ALL REQUIREMENTS OF THE SPECIFICATION FOR NEW WORK, MEET THE REQUIREMENTS OF THE CURRENT C.E.C. FOR VOLUME AND COINCIDE WITH LOCATION SHOWN FOR THE NEW WORK.

K. FLUSH OUTLET BOXES IN EXISTING WALLS TO REMAIN MAY BE ABANDONED IN PLACE. REMOVE DEVICES AND WIRING, PLUG OPENING AND PROVIDE AND INSTALL A BLANK DEVICE PLATE.

L. EXISTING WIRING SHOWN HAS BEEN TAKEN FROM OLD PLANS AND IS ASSUMED TO BE CORRECT. ELECTRICAL CONTRACTOR SHALL FIELD VERIFY ACTUAL CONDITIONS AND MAKE ADJUSTMENTS TO SUIT ACTUAL CONDITIONS AND TO MEET THE INTENT OF THE CONTRACT DOCUMENTS.

M. WHERE TELEPHONE, COMPUTER DATA, FIBER OPTICS, FIRE ALARM OR OTHER COMMUNICATIONS OUTLETS OR WIRING IS TO BE DEMOLISHED IT SHALL BE REMOVED BACK TO THE NEXT TERMINAL POINT. ELECTRICAL CONTRACTOR SHALL COORDINATE WITH OWNER OR HIS REPRESENTATIVE TO HAVE EQUIPMENT AND WIRING DESIGNATED FOR REMOVAL OR PRESERVATION PRIOR TO REMOVAL OF OUTLET BOXES, CONDUIT OR WIRING BY ELECTRICAL CONTRACTOR.

N. COORDINATE WITH OWNER PRIOR TO START OF DEMOLITION TO MINIMIZE POWER INTERRUPTIONS, WORK MAY HAVE TO OCCUR DURING NON-REGULAR BUSINESS HOURS. COORDINATE IN WRITING WITH OWNER ONE WEEK PRIOR TO PLANNED POWER INTERRUPTIONS.

4' 0' 1' 2' 3' 4'
SCALE: 3/16"=1'-0"
NORTH

REGISTERED PROFESSIONAL ENGINEER
ELDRIDGE O. BRAGA
No. E 17780
Exp. 6/30/22
ELECTRICAL
STATE OF CALIFORNIA

AURUM CONSULTING ENGINEERS
MONTEREY BAY, INC.

Project No. 17399.00

60 Garden Court • Suite 210 • Monterey, CA 93940
T.831.646.3330 • F.831.646.3336 • www.acemb.com

These drawings are instruments of service and are the property of AURUM CONSULTING ENGINEERS MONTEREY BAY, INC. All designs and other information in the drawings are for use on the specified project and shall not be used otherwise without the expressed written permission of AURUM CONSULTING ENGINEERS MONTEREY BAY, INC.

JOB No:

REV:	DATE:	DESCRIPTION:

APN:
117-323-011-000

OUR LADY OF ASSUMPTION CHURCH
100 SALINAS ROAD
WATSONVILLE, CA

Sheet Title:
ELECTRICAL DEMOLITION PLAN & GENERAL DEMOLITION NOTES

and associates
230 Capitol St
Salinas, CA. 93901
P (831) 772-2022
F (831) 771-2818

Copyright Notice:

E
3.1

J:\Projects\17399.00 Our Lady of Assumption Church\Dwg\17399E13.dwg 5/20/2021 4:48:43 PM, ebg,
AutoCAD PDF (General Documentation).pc3

BRANCH CIRCUIT CONDUCTOR SIZING TABLE

CIRCUIT AMPACITY/VOLTAGE	CIRCUIT LENGTH	REQUIREMENT
20/120	56'-90'	½" C., 2 #10 & 1 #10 GND.
20/120	91'-140'	½" C., 2 #8 & 1 #10 GND.
20/277	131'-205'	½" C., 2 #10 & 1 #10 GND.
20/277	206'-330'	½" C., 2 #8 & 1 #10 GND.

NOTE:
CONTRACTOR SHALL SIZE BRANCH CIRCUIT CONDUCTORS PER THE TABLE ABOVE AS DETERMINED BY THE CIRCUIT CONDUCTOR LENGTH, U.O.N. CONTRACTOR SHALL SPLICE TO #12 AWG WITHIN TERMINATION BOX FOR DEVICE CONNECTION IF NECESSARY.

SHEET NOTES

1. UNLESS OTHERWISE NOTED, NO NEW ELECTRICAL WORK IN THIS AREA.
2. 1½" C.O. TO IDF LOCATED IN ELECTRICAL ROOM.
3. ¾" C.O. TO IDF LOCATED IN ELECTRICAL ROOM.
4. 153W, 240V, 1Ø.
5. 500W, 120V.
6. .25HP, 120V.
7. 10W, 120V.
8. LOCATE FOR ELECTRICAL PROJECTION SCREEN.
9. LOCATE 5' IN FRONT OF ELEVATOR DOOR FOR ELEVATOR RECALL.

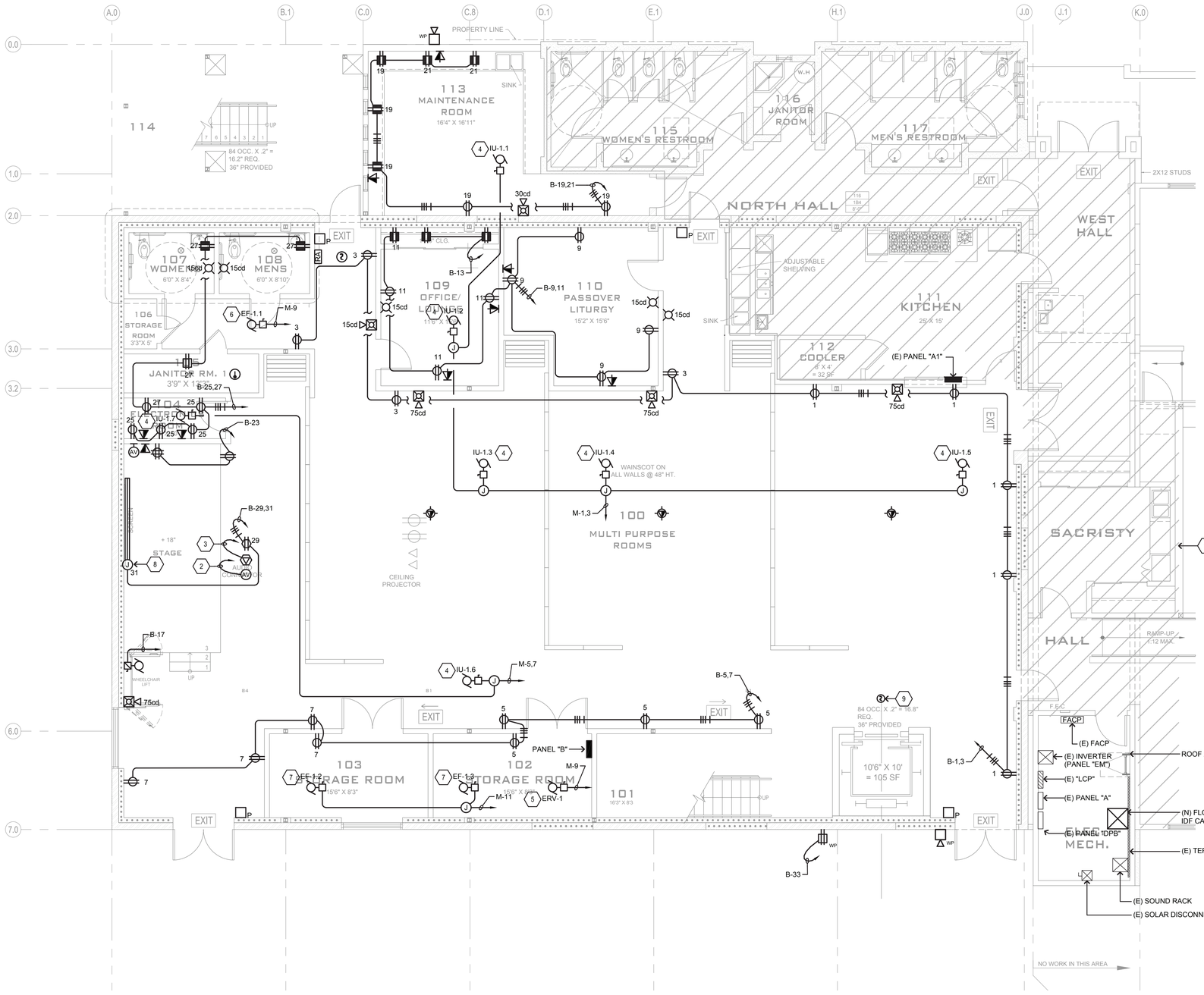

SCALE: 3/16"=1'-0"

NORTH

REGISTERED PROFESSIONAL ENGINEER ELDRIDGE O. BELL No. E 19789 Exp. 6/30/22 ELECTRICAL STATE OF CALIFORNIA

AURUM CONSULTING ENGINEERS
MONTEREY BAY, INC.

Project No. 17399.00

60 Garden Court • Suite 210 • Monterey, CA 93940
T.831.646.3330 • F.831.646.3336 • www.acemb.com

These drawings are instruments of service and are the property of AURUM CONSULTING ENGINEERS MONTEREY BAY, INC. All designs and other information in the drawings are for use on the specified project and shall not be used otherwise without the expressed written permission of AURUM CONSULTING ENGINEERS MONTEREY BAY, INC.

JOB No:

REV:	DATE:	DESCRIPTION:

APN:
117-323-011-000

OUR LADY OF ASSUMPTION CHURCH
100 SALINAS ROAD
WATSONVILLE, CA

Sheet Title:
POWER & SYSTEMS PLAN - LOWER LEVEL

Mesar and associates
230 Capitol St
Salinas, CA. 93901
P (831) 772-2202
F (831) 771-2812

Copyright Notice:

E
4.1

BRANCH CIRCUIT CONDUCTOR SIZING TABLE

CIRCUIT AMPACITY/VOLTAGE	CIRCUIT LENGTH	REQUIREMENT
20/120	56'-90'	½" C., 2 #10 & 1 #10 GND.
20/120	91'-140'	½" C., 2 #8 & 1 #10 GND.
20/277	131'-205'	½" C., 2 #10 & 1 #10 GND.
20/277	206'-330'	½" C., 2 #8 & 1 #10 GND.

NOTE:
CONTRACTOR SHALL SIZE BRANCH CIRCUIT CONDUCTORS PER THE TABLE ABOVE AS DETERMINED BY THE CIRCUIT CONDUCTOR LENGTH, U.O.N. CONTRACTOR SHALL SPLICE TO #12 AWG WITHIN TERMINATION BOX FOR DEVICE CONNECTION IF NECESSARY.

SHEET NOTES

1. MOUNT AT 7'-0" A.F.F.
2. LOCATE FOR WATER HEATER CONTROLS AND CIRCULATION PUMP.
3. 153W, 120V.
4. .25 HP, 120V.
5. 1/100 HP, 120V.
6. .39 HP, 120V.
7. LOCATE 5' IN FRONT OF ELEVATOR DOOR FOR ELEVATOR RECALL.
8. 1¼"C., 3 #2 & 1 #8 GND.
9. 91 MCA, 240V, 1Ø.

DETAIL NOTES:

1. ELEVATOR MOTOR; SEE SINGLE LINE DIAGRAM.
2. 1"C. & CAT 6 CABLE TO IDF ROOM. COORDINATE WITH OWNER FOR TELEPHONE LINE ACTIVATION.
3. LOCATE AT MID-SHAFT OR AS DIRECTED BY THE ELEV. CONTRACTOR FOR CARPOWER AND TELEPHONE.
4. +24" ABOVE ELEV. PIT FLOOR.
5. +24" ABOVE FIRST FLOOR LANDING WITHIN 18" OF THE ACCESS DOOR JAMB.
6. LOCATE AT ELEVATOR CONTROLLER LOCATION.
7. DISC. SW. FOR ELEVATOR CONTROLS PER MANUFACTURER RECOMMENDATIONS.
8. DISC. SW. W/FUSES PER MFGR. RECOMMENDATIONS. SEE SINGLE LINE DIAGRAM.
9. ¾"C. TO FIRE ALARM CONTROL PANEL FOR FIRE ALARM INTERLOCKS, COORDINATE WITH F.A. CONTRACTOR.
10. SEE SINGLE LINE DIAGRAM.
11. VAPOR TYPE WALL MOUNTED LIGHT FIXTURE LED.
12. LIGHT FIXTURE TYPE "F"

GENERAL NOTES:

1. VERIFY EXACT LOCATION OF ALL OUTLETS, FIXTURES, DEVICES, ETC. WITH THE ELEVATOR MFGR. PRIOR TO COMMENCEMENT OF WORK.
2. ALL DEVICES, OUTLETS, FIXTURES, BOXES, ETC. IN THE ELEVATOR SHAFT & PIT SHALL BE WEATHER PROOF.
3. ALL 20A DUPLEX RECEPTACLES INSTALLED IN PITS, MACHINE ROOMS OR MACHINERY SPACES SHALL BE GROUND-FAULT CIRCUIT INTERRUPTER.
4. ALL WIRING RELATED TO ELEVATOR EQUIPMENT SHALL BE IN CONDUIT.
5. CIRCUIT BREAKER SERVING THE ELEVATOR MOTOR SHALL HAVE 120V SHUNT TRIP ACTIVATED BY HEAT DETECTORS IN MACHINE ROOM.

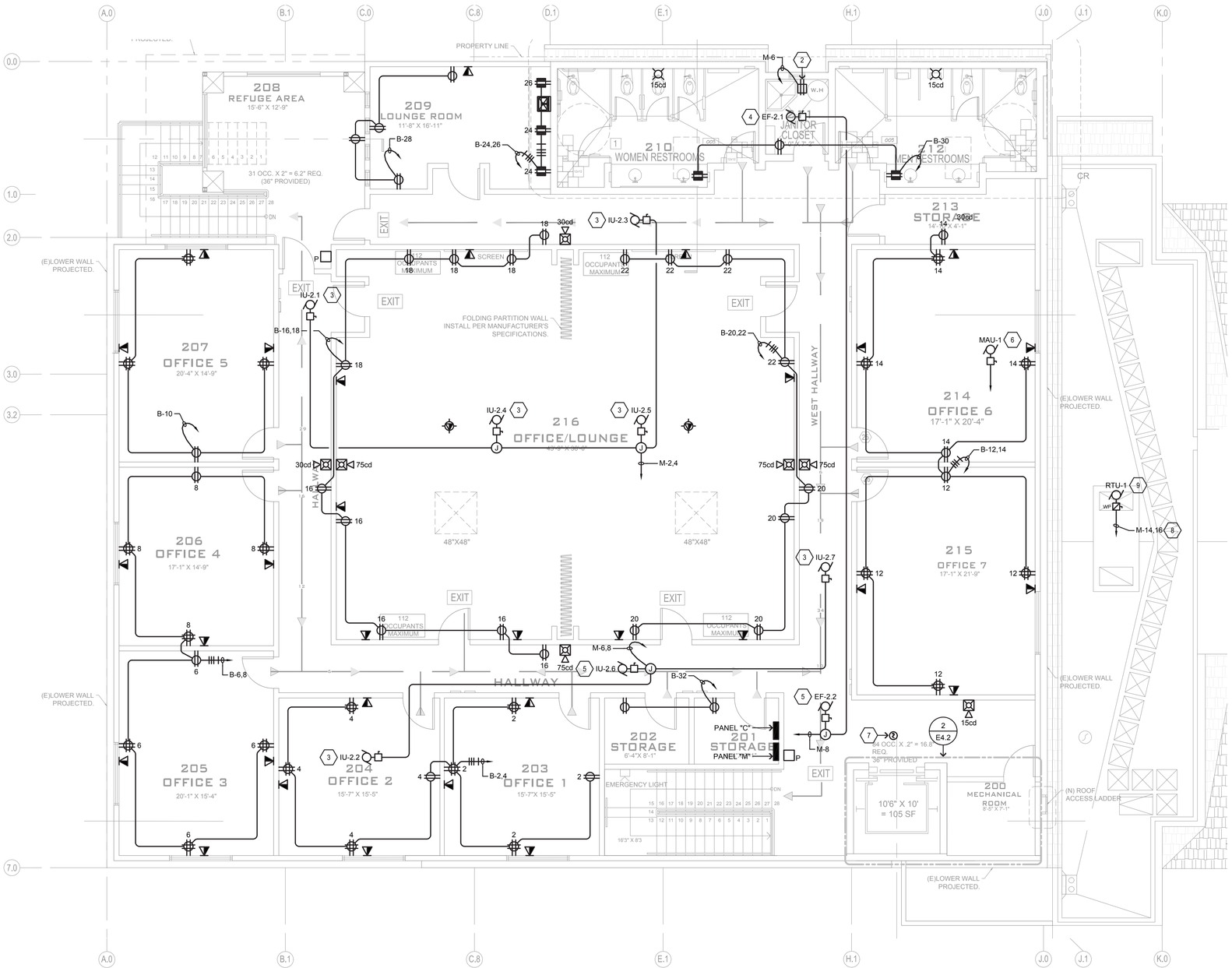

1 POWER AND SYSTEMS PLAN - UPPER LEVEL

SCALE: 3/16"=1'-0"

NORTH

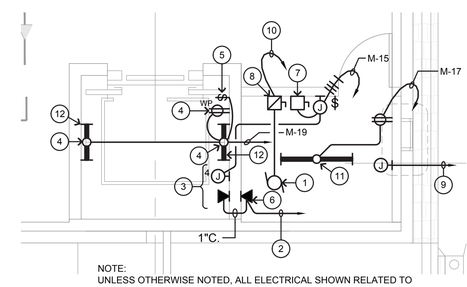

NOTE:
UNLESS OTHERWISE NOTED, ALL ELECTRICAL SHOWN RELATED TO THE ELEVATOR AND ELEVATOR MACHINE ROOM, SHALL BE PROVIDED AND INSTALLED BY MODULAR BUILDING MANUFACTURER.

2 PARTIAL UPPER LEVEL PLAN - MECH. ROOM

SCALE: 1/4"=1'-0"

NORTH

REGISTERED PROFESSIONAL ENGINEER
ELDRIDGE O. BELL
No. E17769
Exp. 12/30/23
ELECTRICAL
STATE OF CALIFORNIA

AURUM CONSULTING ENGINEERS
MONTEREY BAY, INC.

Project No. 17399.00

60 Garden Court • Suite 210 • Monterey, CA 93940
T.831.646.3330 • F.831.646.3336 • www.acemb.com

These drawings are instruments of service and are the property of AURUM CONSULTING ENGINEERS MONTEREY BAY, INC. All designs and other information in the drawings are for use on the specified project and shall not be used otherwise without the expressed written permission of AURUM CONSULTING ENGINEERS MONTEREY BAY, INC.

JOB No:

REV:	DATE:	DESCRIPTION:

APN:
117-323-011-000

OUR LADY OF ASSUMPTION CHURCH
100 SALINAS ROAD
WATSONVILLE, CA

Sheet Title:
POWER & SYSTEMS PLAN - UPPER LEVEL & MECH. ROOM

Moor and associates
230 Capitol St
Salinas, CA. 93901
P (831)771-2802
F (831)771-2818

Copyright Notice:

E
4.2

SHEET NOTES

1. VIA EXISTING LIGHTING PANEL "LCP".
2. TO LIGHT FIXTURE IN UPPER LEVEL, SEE E5.2.

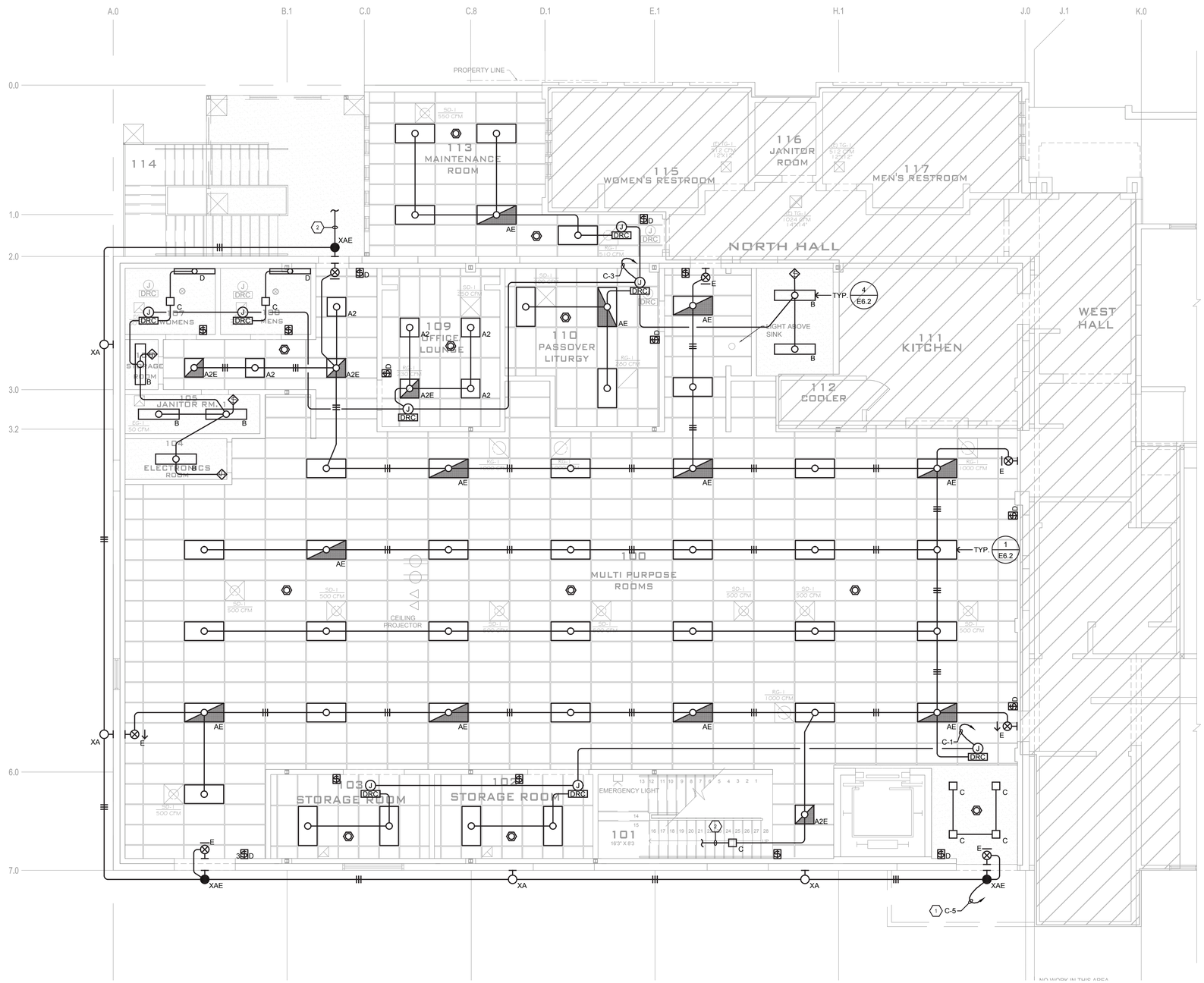

DAYLIT ZONES LEGEND

- PRIMARY DAYLIT ZONE
- SECONDARY DAYLIT ZONE

GENERAL NOTES:

A. SEE SHEET E6.1 FOR LIGHTING CONTROLS AND SEQUENCE OF OPERATION.

B. UNLESS OTHERWISE NOTED, LIGHT FIXTURES ARE TYPE "A".

SCALE: 3/16"=1'-0"

NORTH

REGISTERED PROFESSIONAL ENGINEER
ELDRIDGE O. BEEL
No. E 19789
Exp. 6/30/22
ELECTRICAL
STATE OF CALIFORNIA

AURUM CONSULTING ENGINEERS
MONTEREY BAY, INC.

Project No. 17399.00

60 Garden Court • Suite 210 • Monterey, CA 93940
T.831.646.3330 • F.831.646.3336 • www.acemb.com

These drawings are instruments of service and are the property of AURUM CONSULTING ENGINEERS MONTEREY BAY, INC. All designs and other information in the drawings are for use on the specified project and shall not be used otherwise without the expressed written permission of AURUM CONSULTING ENGINEERS MONTEREY BAY, INC.

JOB No:

REV:	DATE:	DESCRIPTION:

APN:
117-323-011-000

OUR LADY OF ASSUMPTION CHURCH

100 SALINAS ROAD
WATSONVILLE, CA

Sheet Title:
LIGHTING PLAN - LOWER LEVEL

Moser and associates
230 Capitol St
Salinas, CA. 93901
T (831) 772-2802
F (831) 771-2812

Copyright Notice:

E
5.1

SHEET NOTES

1. TO LIGHT FIXTURE IN LOWER LEVEL, SEE E5.1.

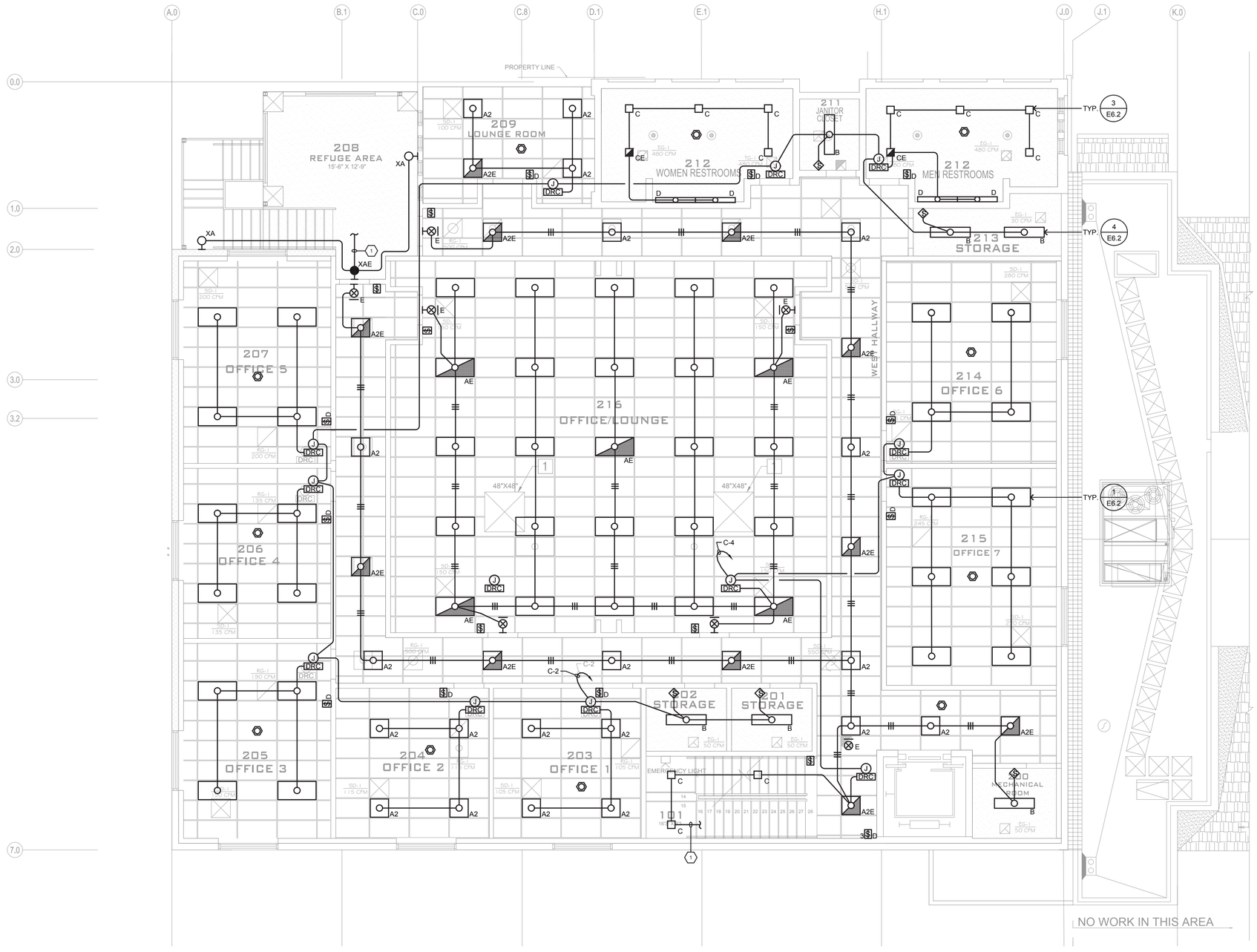

DAYLIT ZONES LEGEND

- PRIMARY DAYLIT ZONE
- SECONDARY DAYLIT ZONE

GENERAL NOTES:

A. SEE SHEET E6.1 FOR LIGHTING CONTROLS AND SEQUENCE OF OPERATION.

B. UNLESS OTHERWISE NOTED, LIGHT FIXTURES ARE TYPE "A".

SCALE: 3/16"=1'-0"

NORTH

REGISTERED PROFESSIONAL ENGINEER
ELDRIDGE O. BELL
No. E 17789
Exp. 12/30/25
ELECTRICAL
STATE OF CALIFORNIA

AURUM CONSULTING ENGINEERS MONTEREY BAY, INC.

Project No. 17399.00

60 Garden Court • Suite 210 • Monterey, CA 93940
T.831.646.3330 • F.831.646.3336 • www.acemb.com

These drawings are instruments of service and are the property of AURUM CONSULTING ENGINEERS MONTEREY BAY, INC. All designs and other information in the drawings are for use on the specified project and shall not be used otherwise without the expressed written permission of AURUM CONSULTING ENGINEERS MONTEREY BAY, INC.

JOB No:

REV:	DATE:	DESCRIPTION:

APN:
117-323-011-000

OUR LADY OF ASSUMPTION CHURCH
100 SALINAS ROAD
WATSONVILLE, CA

Sheet Title:
LIGHTING PLAN - UPPER LEVEL

Kwan and associates
230 Capitol St
Salinas, CA 93901
T (831) 772-2892
F (831) 771-2818

Copyright Notice:

E
5.2

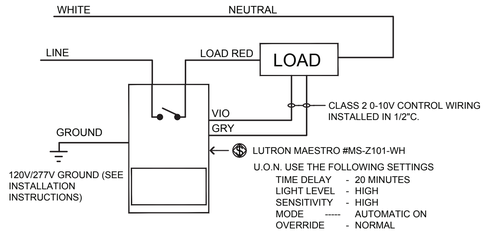

7 WALL DIMMING OCC. SENSOR WIRING

NO SCALE

FINAL DETERMINATION OF CIRCUITING, VOLTAGE AND QUANTITY OF POWER PACKS REQUIRED, AND SETTING OF SENSITIVITY/TIME ADJUSTMENTS ARE THE RESPONSIBILITY OF THE INSTALLING CONTRACTOR. AND/OR COMMISSIONING AGENT, MANUFACTURER'S INSTALLATION INSTRUCTIONS SHOULD BE ADHERED TO.

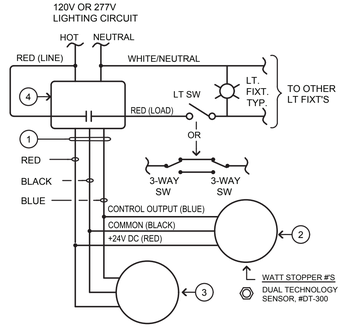

NOTES:

1. ALL SENSOR LOCATIONS ARE APPROXIMATE, REFER TO MANUFACTURER'S INSTALLATION INSTRUCTIONS PRIOR TO INSTALLATION.
2. DUAL TECHNOLOGY CEILING MOUNT SENSORS REQUIRE THEY BE LOCATED NO CLOSER THAN 6' FROM AIR SUPPLY/RETURN REGISTERS.
3. CONTRACTOR IS RESPONSIBLE FOR: PROPER SENSITIVITY & TIME DELAY SETTINGS & MANUFACTURER'S RECOMMENDED PLACEMENT, FIELD VERIFICATION OF CIRCUITS WITH RESPECT TO POWER PACK PLACEMENT.
4. CONTRACTOR IS RESPONSIBLE FOR FIELD VERIFICATION OF REQUIRED NUMBER OF POWER PACKS.

A. ONE POWER PACK IS REQUIRED FOR EACH CIRCUIT THAT IS TO BE CONTROLLED.

B. DEPENDING ON TYPE OF SENSOR UP TO 3 SENSORS CAN BE WIRED IN PARALLEL TO A SINGLE POWER PACK.

DETAIL NOTES:

1. LOW VOLTAGE WIRING
2. SENSOR.
3. ADDITIONAL SENSOR
4. POWER PACK

6 OCCUPANCY SENSOR WIRING DIAGRAM

NO SCALE

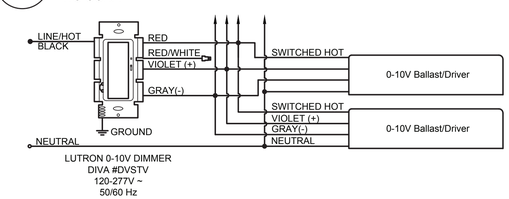

5 0-10V DIMMING WIRING DIAGRAM

NO SCALE

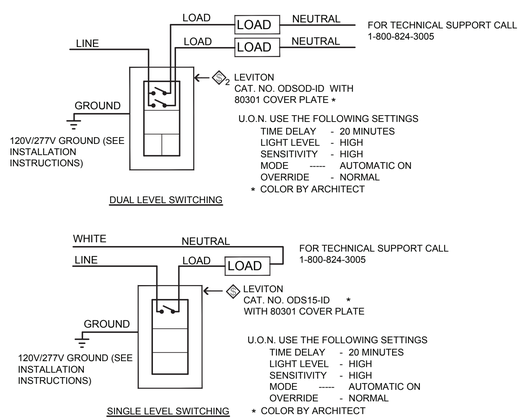

4 WALL OCCUPANCY SENSOR WIRING

NO SCALE

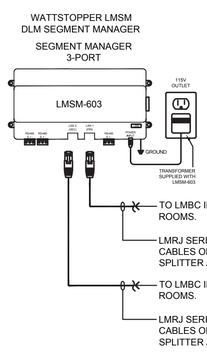

8 SEGMENT MANAGER

NO SCALE

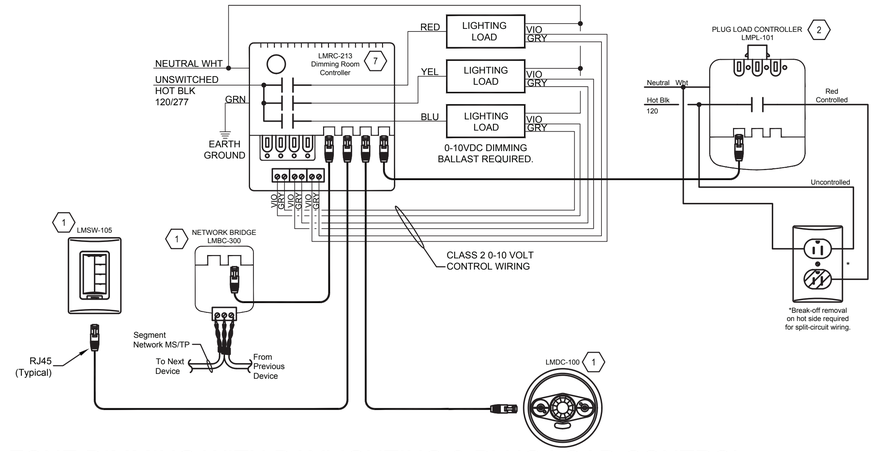

3 3-ZONE DIMMING WITH DAYLIGHTING & PLUG LOAD CONTROL

NO SCALE

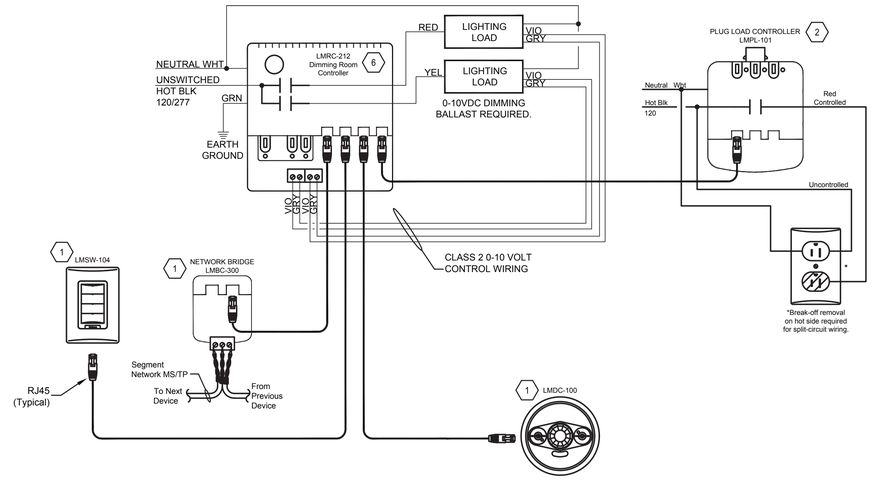

2 2-ZONE DIMMING WITH DAYLIGHTING & PLUG LOAD CONTROL

NO SCALE

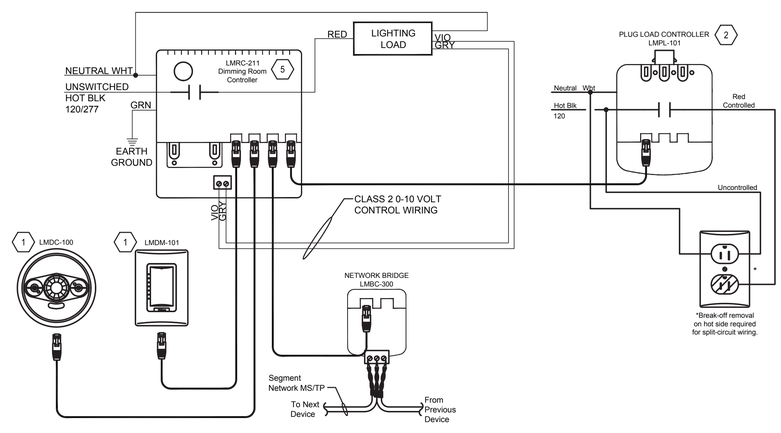

1 1-ZONE DIMMING WITH PLUG LOAD CONTROLS

NO SCALE

REGISTERED PROFESSIONAL ENGINEER
ELDRIDGE O. BEEL
No. E 19780
Exp. 6/30/22
ELECTRICAL
STATE OF CALIFORNIA

AURUM CONSULTING ENGINEERS
MONTEREY BAY, INC.

Project No. 17399.00

60 Garden Court • Suite 210 • Monterey, CA 93940
T.831.646.3330 • F.831.646.3336 • www.acemb.com

These drawings are instruments of service and are the property of AURUM CONSULTING ENGINEERS MONTEREY BAY, INC. All designs and other information in the drawings are for use on the specified project and shall not be used otherwise without the expressed written permission of AURUM CONSULTING ENGINEERS MONTEREY BAY, INC.

JOB No:

REV:	DATE:	DESCRIPTION:

APN:
117-323-011-000

OUR LADY OF ASSUMPTION CHURCH
100 SALINAS ROAD
WATSONVILLE, CA

Sheet Title:
ELECTRICAL DETAILS

and associates
230 Capitol St
Salinas, CA. 93901
P (831) 757-2202
F (831) 771-2812

Copyright Notice:

E
6.1

C:\Projects\17399-17399.00 Our Lady of Assumption Church\Dwgs\17399E6.1.dwg, 9/20/2021 4:49:23 PM, vitu, AutoCAD PDF (General Documentation).pc3

INTERIOR LIGHTING & RECEPTACLE CONTROLS SEQUENCE OF OPERATION

ROOM TYPE	OCCUPANCY SENSOR - MANUAL ON	OCCUPANCY SENSOR - AUTO ON	OCCUPANCY SENSOR - AUTO OFF	OCCUPANCY SENSOR - PARTIAL OFF	CONTINUOUS DIMMING TO OFF	ON/OFF SWITCH	MULTI ZONE DIMMING	AUTO TIME CLOCK OFF	AUTO TIME CLOCK ON	DAY LIGHT SENSOR - AUTO DIMMING (WHERE SHOWN ON PLANS)	OVERRIDE SWITCH CONTROL	SET LIGHT LEVEL TO 100% ON	SET LIGHT LEVEL TO 75% (IES RECOMMENDATIONS)	ACCEPTANCE TESTING OF CONTROLS BY CLCATT	REMARKS
OPEN OFFICE				•		•	•	•	•	•	•		•		'ON' AND 'OFF' TIME SET PER OWNER.
PRIVATE OFFICE < 250 FT²	•		•		•						•		•		
PRIVATE OFFICE > 250 FT²	•		•		•		•			•	•		•		
MEETING ROOMS		•	•		•		•			•			•	•	
BREAK ROOMS	•		•		•		•			•			•	•	
KITCHEN		•	•		•		•			•			•	•	
CORRIDORS/HALLWAYS/LIBRARY STACKS/WAREHOUSE AISLE		•		•		•		•	•		•		•	•	DIM TO 50% WHEN UNOCCUPIED/'ON' AND 'OFF' TIME SET PER OWNER.
SMALL RESTROOMS < 100 FT²	•		•			•							•	•	
LARGE RESTROOMS		•	•		•								•	•	
RECEPTION/LOBBY							•	•	•	•	•		•	•	'ON' AND 'OFF' TIME SET PER OWNER.
ELECTRICAL/MECHANICAL/UTILITY ROOMS						•	•	•	•	•	•		•	•	'ON' AND 'OFF' TIME SET PER OWNER.
EXAM ROOMS		•	•		•		•			•			•	•	
PROCEDURE ROOMS		•	•		•		•			•			•	•	
CLASSROOMS		•	•		•		•					•		•	
MULTI PURPOSE ROOM < 1000 FT²		•	•		•		•						•	•	
CONFERENCE ROOM		•	•		•		•						•	•	
PRIVATE OFFICE WITHOUT DAY LIGHTING	•		•		•							•		•	
ANY SPACE < 100 FT²	•		•			•							•	•	
CONTROLLED RECEPTACLES		•	•											•	

GENERAL NOTES:

A. LIGHTING CONTROL SYSTEMS SHALL BE CAPABLE OF MEETING DEMAND RESPONSE REQUIREMENTS OF CALIFORNIA TITLE 24.

B. DAYLIGHT SENSORS & DEMAND RESPONSE REQUIREMENTS ARE EXEMPT FROM THIS PROJECT PER CALIFORNIA TITLE 24 "TABLE 141.0-E CONTROL REQUIREMENTS FOR ENTIRE LUMINAIRE ALTERATIONS" LIGHTING POWER DENSITY IS ≤ 85% OF ALLOWANCE .

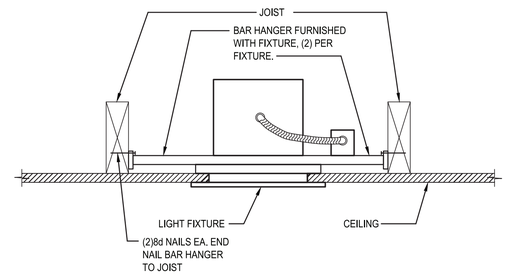

RECESSED FIXTURE IN GYP. BOARD CEILING

3 FIXTURE MOUNTING DETAIL

NO SCALE

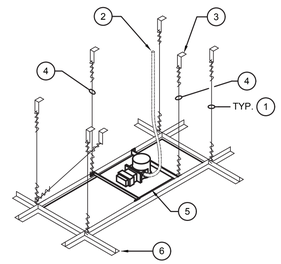

DETAIL NOTES:

1. EXISTING WIRE TO SUPPORT "T-BAR" CEILING GRID.
2. ½" FLEX CONDUIT, 2#12 & 1#12GND. 6'-0" MAX. LENGTH.
3. TYPICAL ANCHOR TO CEILING STRUCTURE; FOR ANCHORAGE REQUIREMENTS SEE ARCHITECTURAL DRAWINGS.
4. INSTALL ONE #12 GA TAUT WIRE AT DIAGONAL CORNERS OF FIXTURE W/ THREE (3) FULL TURNS FOR EACH #12 WIRE IN 1 ½" DISTANCE.
5. NEW LIGHT FIXTURE PER PLAN., 8.5lbs.
6. EXISTING MEDIUM DUTY CEILING GRID SYSTEM

FIXTURE MOUNTING GENERAL NOTES:

ATTACH ALL LIGHT FIXTURES TO THE CEILING GRID RUNNERS TO RESIST A HORIZONTAL FORCE EQUAL TO THE WEIGHT OF THE FIXTURE.

THE TWO (2) TAUT #12 GAUGE WIRES INCLUDING THEIR ATTACHMENT TO THE STRUCTURE NOTED ABOVE, MUST BE CAPABLE OF SUPPORTING FOUR (4) TIMES THE WEIGHT OF THE COMPLETE UNIT.

2 LIGHT FIXTURE MOUNTING TO T-BAR DETAIL

NO SCALE

DETAIL NOTES:

1. WIRE TO SUPPORT "T-BAR" CEILING GRID BY OTHERS.
2. CEILING STRUCTURE.
3. TYPICAL ANCHOR TO CEILING STRUCTURE, SAME AS APPROVED GRID WIRE ANCHOR.
4. ONE #12 GA TAUT WIRE AT EACH CORNER OF FIXTURE W/ FOUR (4) FULL TURNS FOR EACH #12 WIRE IN 1 ½" DISTANCE. (BY ELECTRICAL CONTRACTOR).
5. LIGHT FIXTURE.
6. CEILING GRID SYSTEM BY OTHERS.
7. EARTHQUAKE CLIPS, 4 EA. TYP.
8. ANCHOR FIXTURE OUTLET BOX TO CEILING STRUCTURE
9. ½" FLEX CONDUIT, 2#12 & 1#12GND.
10. IF FLEX CONDUIT LENGTH EXCEEDS 6 FOOT, FASTEN FLEX CONDUIT TO FLEX CONDUIT SUPPORT WIRE PER N.E.C. SPACING.
11. CONNECT FLEX CONDUIT SUPPORT WIRE TO FIXTURE.

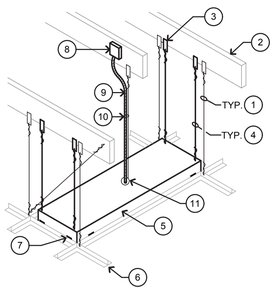

SCOPE OF WORK:

ADDITION OF NEW DEVICES TO EXISTING ADDRESSABLE FIRE ALARM SYSTEM INCLUDING ALL REQUIRED EQUIPMENT, PANELS, RACEWAYS, CONDUCTORS, CONNECTIONS, PROGRAMMING, TESTING AND APPROVAL BY THE LOCAL AUTHORITY HAVING JURISDICTION.

SEQUENCE OF OPERATION OF THE FIRE ALARM SYSTEM.

A. ACTIVATION OF ANY INITIATING DEVICE SHALL CAUSE ALL SIGNALS IN BUILDING TO ACTIVATE AND SOUND AND SIMULTANEOUSLY CAUSE AN ALARM TO BE SENT TO THE REMOTE MONITORING AGENCY.

B. THE ADDRESS CORRESPONDING TO THE INITIATION DEVICE IN ALARM SHALL APPEAR ON FIRE ALARM CONTROL PANEL LCD SCREEN.

C. CLOSING THE FIRE ALARM SPRINKLER OS & Y VALVE SHALL INITIATE A TROUBLE INDICATION AT FIRE ALARM CONTROL PANEL AND MONITORING STATION.

D. SHOULD AN OPEN, GROUND OR SHORT OCCUR IN THE WIRING SYSTEM, FIRE ALARM CONTROL PANEL WILL DETECT MALFUNCTION AND INITIATE A TROUBLE ALARM INDICATOR AT PANEL AND MONITORING STATION.

E. [ACTIVATION OF SMOKE DETECTOR ON TOP OF ELEV. SHAFT OR IN ELEV. MACHINE ROOM WILL CAUSE ELEV. RECALL TO ASSIGNED FLOOR.]

F. ACTIVATION OF THE HEAT DETECTOR IN ELEVATOR EQUIPMENT ROOM WILL CAUSE CIRCUIT BREAKER FOR ELEVATOR POWER TO SHUNT TRIP. HEAT DETECTOR SHALL HAVE A LOWER RESPONSE TIME INDEX THAN SPRINKLER HEAD]

F. FIRE ALARM CONTRACTOR SHALL PROVIDE ALL ADDRESSABLE CONTROL RELAYS AND/OR CONTROL MODULES REQUIRED FOR ELEVATOR RECALL, ELEVATOR POWER SHUNT, FIREMAN'S HAT, ETC. CONTRACTOR SHALL VERIFY REQUIREMENTS WITH ELEVATOR CONTRACTOR.

G. ONCE THE SYSTEM IS BACK TO NORMAL. THE PANEL WILL RESOUND FOR PROPER RESETTING.

FIRE ALARM NOTES:

1. EXISTING ADDRESSABLE FIRE ALARM CONTROL PANEL,FIRE-LITE MS-9050UD WITH COMMUNICATOR, INITIATING AND ANNUNCIATING DEVICES, CHARGER & BATTERIES.
2. THE CONTRACTOR SHALL PROVIDE AND INSTALL ALL MATERIALS, EQUIPMENT AND PROVIDE ALL LABOR REQUIRED AND NECESSARY TO COMPLETE THE WORK SHOWN ON THE DRAWINGS.
3. THE FIRE ALARM SYSTEM SHALL BE INSTALLED AS SPECIFIED IN ALL SECTIONS OF DIVISION 16 AND DIVISION 15, INCLUDING ALL OTHER WORK AND MISCELLANEOUS ITEMS NOT SPECIFICALLY MENTIONED BUT REASONABLY INFERRED FOR COMPLETE INSTALLATION.
4. ALL WIRE SHALL BE MINIMUM #12AWG FOR ANNUNCIATION CIRCUITS AND MINIMUM #16AWG TWISTED SHIELDED PAIR CABLE FOR INITIATING CIRCUITS. ALL WIRING SHALL BE ROUTED CONCEALED.
5. SUBMIT COMPLETE FIRE ALARM SYSTEM PLANS INCLUDING RISER DIAGRAMS, BATTERY CALCS, VOLT DROP CALCS, WIRING DIAGRAMS, ETC. TO LOCAL FIRE AUTHORITY REVIEW AND APPROVAL PRIOR TO START OF INSTALLATION.
6. FINAL CONNECTIONS OF DEVICES AND EQUIPMENT SHALL BE BY A FIRE ALARM CONTRACTOR WHO PERFORMS SUCH WORK ON A REGULAR BASIS.
7. FINAL TESTING SHALL BE WITNESSED BY THE LOCAL FIRE AGENCY.
8. PROVIDE MANUALS AND MINIMUM 2-HOURS OPERATING INSTRUCTION TO OWNER.
9. PROVIDE BATTERY BACKUP FOR 24 [60] HOURS OF STANDBY & 5 MINUTES OF ALARM.
10. RELAY SHALL BE PROVIDED FOR ELEVATOR RECALL, SMOKE DETECTORS IN LOBBIES SHALL BE PROGRAMMED FOR DESIGNATED AND ALTERNATE LEVEL PER LOCAL JURISDICTION.
11. RELAY SHALL BE PROVIDED FOR VISUAL WARNING IN ELEVATOR (FIREMAN'S HAT) ON ACTIVATION OF ELEVATOR MACHINE ROOM INITIATION DEVICES.
12. VERIFY COLOR (RED OR WHITE) OF NOTIFICATION APPLIANCES WITH ARCHITECT.

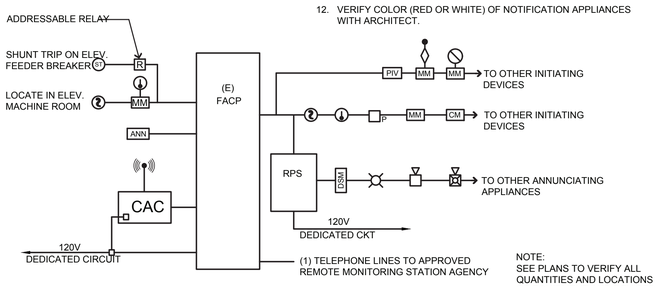

NOTE:
SEE PLANS TO VERIFY ALL QUANTITIES AND LOCATIONS OF EQUIPMENT AND DEVICES REQUIRED FOR THE PROJECT.

6 TYPICAL FIRE ALARM RISER DIAGRAM

NO SCALE

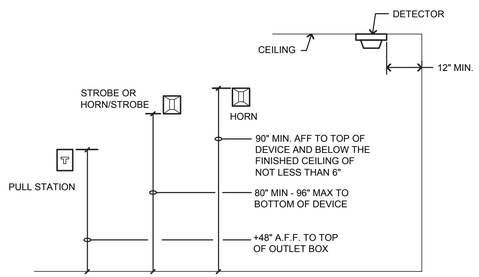

5 F.A. DEVICE MOUNTING ELEVATION

NO SCALE

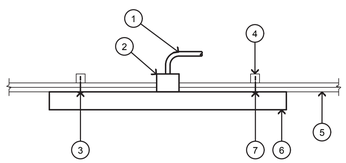

DETAIL NOTES:

1. BRANCH CKT. CONDUIT
2. FIXTURE OUTLET BOX
3. ALL SCREWS TO HAVE MIN. 1½" PENETRATION INTO FRAMING
4. 2 x 4 JOIST OR BLOCKING
5. FINISHED CLG. MATERIAL (SEE ARCH)
6. SURFACE MOUNT FIXTURE
7. FASTEN FIXTURE TO FRAMING W/ ¼" DIA. LAG SCREW AT EACH CORNER

NOTE:
PREDRILL ALL FRAMING TO MINIMIZE POSSIBILITY OF SPLITTING BLOCKING.

4 SURFACE MOUNTED FIXTURE DETAIL

NO SCALE

GENERAL NOTES:

ATTACH ALL LIGHT FIXTURES TO THE CEILING GRID RUNNERS TO RESIST A HORIZONTAL FORCE EQUAL TO THE WEIGHT OF THE FIXTURE.

FLUSH OR RECESSED LIGHT FIXTURE WEIGHING LESS THAN 56 POUNDS MAY BE SUPPORTED DIRECTLY ON THE RUNNERS OF A HEAVY DUTY GRID SYSTEM BUT, IN ADDITION, THE FIXTURES MUST HAVE A MINIMUM OF TWO (2) #12 GAUGE SLACK SAFETY WIRES ATTACHED TO THE DIAGONAL CORNERS & ANCHORED TO THE STRUCTURE ABOVE. LIGHT FIXTURES IN A MEDIUM DUTY GRID SYSTEM MUST HAVE TAUT SAFETY WIRES.

ALL FLUSH OR RECESSED LIGHT FIXTURES WEIGHING 56 POUNDS OR MORE MUST BE INDEPENDENTLY SUPPORTED BY NO LESS THAN FOUR (4) TAUT #12 GAUGE WIRES. EACH "TAUT" WIRE SHALL BE ATTACHED TO THE STRUCTURE REGARDLESS OF THE TYPE OF CEILING GRID SYSTEM USED.

THE FOUR (4) TAUT #12 GAUGE WIRES INCLUDING THEIR ATTACHMENT TO THE STRUCTURE NOTED ABOVE, MUST BE CAPABLE OF SUPPORTING FOUR (4) TIMES THE WEIGHT OF THE COMPLETE UNIT.

1 T-BAR MOUNTING FIXTURE DETAIL

NO SCALE

REGISTERED PROFESSIONAL ENGINEER
ELDRIDGE O. BELL
No. E 17789
Exp. 12/30/22
ELECTRICAL
STATE OF CALIFORNIA

AURUM CONSULTING ENGINEERS
MONTEREY BAY, INC.

Project No. 17399.00

60 Garden Court • Suite 210 • Monterey, CA 93940
T.831.646.3330 • F.831.646.3336 • www.acemb.com

These drawings are instruments of service and are the property of AURUM CONSULTING ENGINEERS MONTEREY BAY, INC. All designs and other information in the drawings are for use on the specified project and shall not be used otherwise without the expressed written permission of AURUM CONSULTING ENGINEERS MONTEREY BAY, INC.

JOB No:

REV:	DATE:	DESCRIPTION:

APN:
117-323-011-000

OUR LADY OF ASSUMPTION CHURCH
100 SALINAS ROAD
WATSONVILLE, CA

Sheet Title:
ELECTRICAL DETAILS

and associates
230 Capitol St
Salinas, CA 93901
P. 831.757.2902
F. 831.757.2818

Copyright Notice:

E
6.2

G:\Projects\17xxx\17399.00 Our Lady of Assumption Church\Dwgs\01\17399E2.dwg 9/20/2021 4:49:31 PM, ebell, AutoCAD PDF (General Documentation).pc3

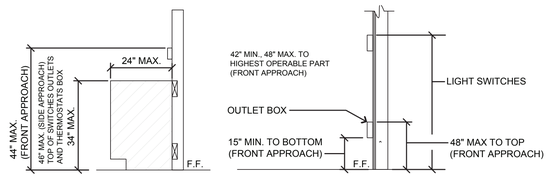

8 DEVICE MOUNTING DETAIL

NO SCALE

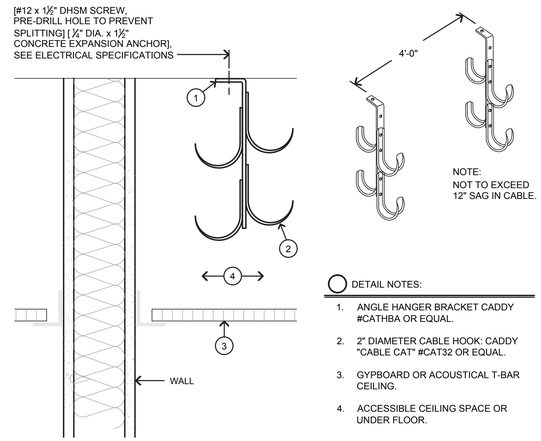

DETAIL NOTES:

1. ANGLE HANGER BRACKET CADDY #CATHBA OR EQUAL.
2. 2" DIAMETER CABLE HOOK: CADDY "CABLE CAT" #CAT32 OR EQUAL.
3. GYPBOARD OR ACOUSTICAL T-BAR CEILING.
4. ACCESSIBLE CEILING SPACE OR UNDER FLOOR.

5 J-HOOK MOUNTING DETAIL

NO SCALE

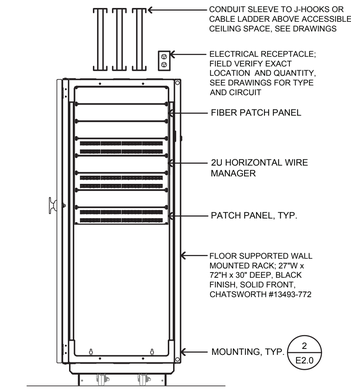

GENERAL NOTES:

1. FIELD VERIFY EXACT LOCATION OF CABINET WITH IT DEPARTMENT BEFORE ROUGH-IN. MOUNT SO THAT CABINET DOOR CAN SWING FULLY OPEN.
2. PROVIDE ALL MISCELLANEOUS CONNECTORS, WIRE MANAGEMENT, SHELF BRACKETS, CABLE SPLICE KITS, MOUNTING HARDWARE, ETC. AS REQUIRED FOR A COMPLETE INSTALLATION.
3. PROVIDE PATCH PANELS FOR QUANTITY OF DATA OUTLETS IN PROJECT PLUS 20%.
4. LEAVE ADEQUATE CABLE LENGTH TO ALLOW DOOR TO SWING FULLY OPEN.
5. PROVIDE AND INSTALL #6 TO PANEL OR MAIN GROUND BUS BAR.

2 WALL CABINET DETAIL

NO SCALE

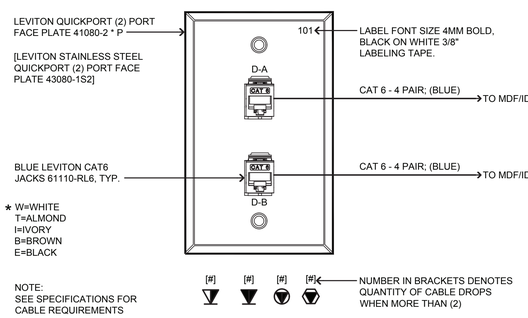

7 DATA WORKSTATION OUTLET DETAIL

NO SCALE

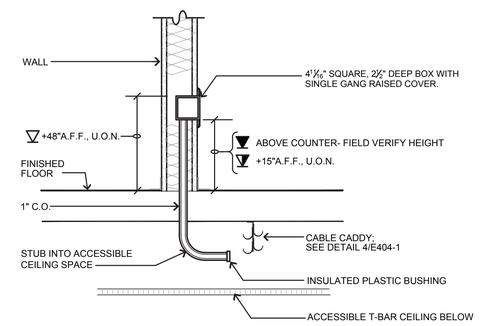

4 TELE/DATA OUTLET DETAIL

NO SCALE

DETAIL NOTES:

1. 16 GA. "C" SHAPE BLOCKING BEHIND CABINET AT FASTENER LOCATIONS. BLOCK FLANGES AND FASTEN WEB OF 20 GA. BLOCK TO FLANGE OF TYPICAL STUDS - (2) #6 EA. END
2. #14 SELF-TAPPING SCREWS INTO METAL BLK'G TYPICAL (6) PER CABINET.
3. METAL STUD WALL FRAMING.
4. FACE OF WALL.
5. CABINET CASTERS.

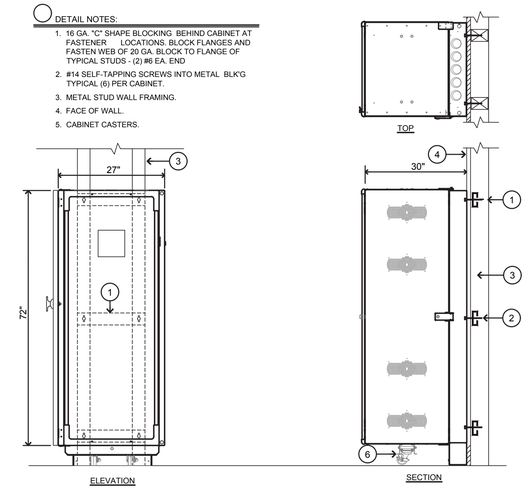

1 WALL CABINET MOUNTING DETAIL

NO SCALE

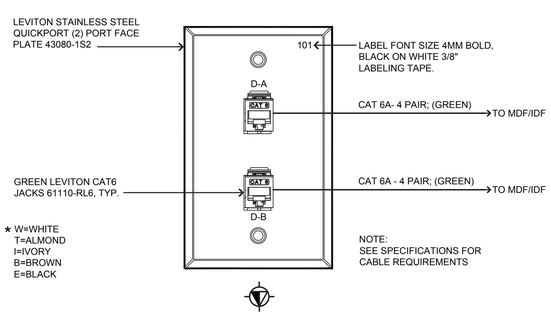

6 DATA WIRELESS OUTLET DETAIL

NO SCALE

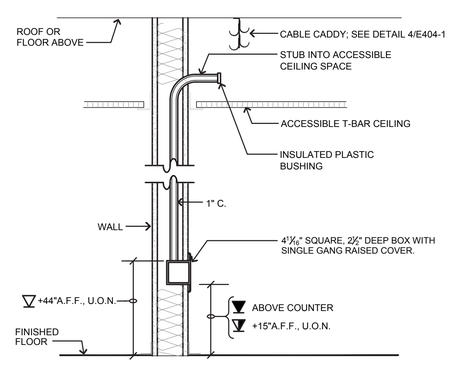

3 TELE/DATA OUTLET DETAIL

NO SCALE

REGISTERED PROFESSIONAL ENGINEER
ELDRIDGE O. BELL
No. E 17789
Exp. 12/30/25
ELECTRICAL
STATE OF CALIFORNIA

AURUM CONSULTING ENGINEERS
MONTEREY BAY, INC.

Project No. 17399.00

60 Garden Court • Suite 210 • Monterey, CA 93940
T.831.646.3330 • F.831.646.3336 • www.acemb.com

These drawings are instruments of service and are the property of AURUM CONSULTING ENGINEERS MONTEREY BAY, INC. All designs and other information in the drawings are for use on the specified project and shall not be used otherwise without the expressed written permission of AURUM CONSULTING ENGINEERS MONTEREY BAY, INC.

JOB No:

REV:	DATE:	DESCRIPTION:

APN:
117-323-011-000

OUR LADY OF ASSUMPTION CHURCH
100 SALINAS ROAD
WATSONVILLE, CA

Sheet Title:
ELECTRICAL SPECIFICATIONS

and associates
230 Capitol St
Salinas, CA 93901
P (831) 757-2902
F (831) 771-2818

Copyright Notice:

E
6.3

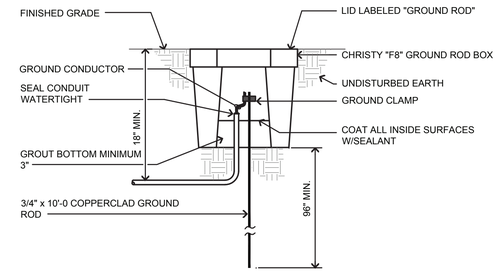

NOTE:
WHERE METAL CONDUIT USED IN LIEU OF PVC, PROVIDE GROUND BUSHINGS & BONDS PER CODE

3 GROUND ROD BOX DETAIL

NO SCALE

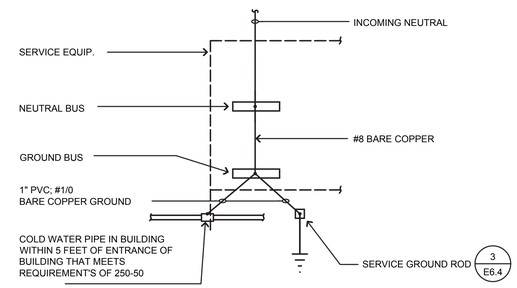

2 MAIN PANEL SERVICE GROUND

NO SCALE

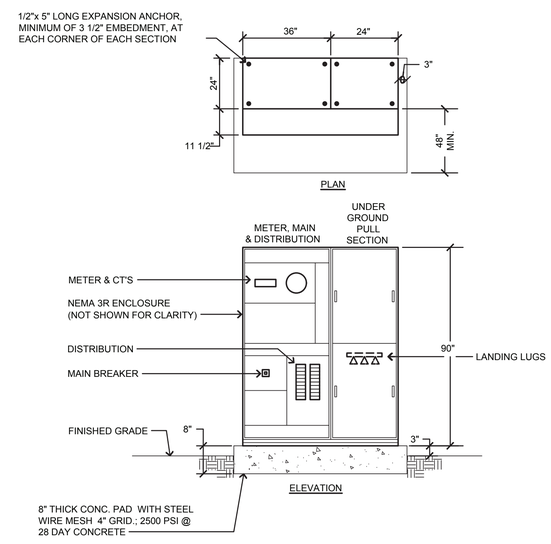

1 SWITCHBOARD ELEVATION

NO SCALE

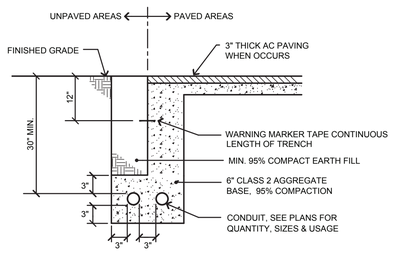

NOTES:

1. BASE MATERIAL TO BE REPLACED TO THE DEPTH OF EXISTING BASE AND COMPACTED TO A MIN. 95% RELATIVE COMPACTION. IF APPROVED, A.C. MAY BE SUBSTITUTED FOR BASE MATERIAL WHEN USED AS BACKFILL, CLASS 100-E-100 P.C.C. MAY BE SUBSTITUTED FOR BASE MATERIAL.
2. COORDINATE WORK WITH LANDSCAPE DRAWINGS AND LANDSCAPE SPECIFICATIONS FOR ADDITIONAL REQUIREMENTS.

5 TYPICAL TRENCH SECTION DETAIL

NO SCALE

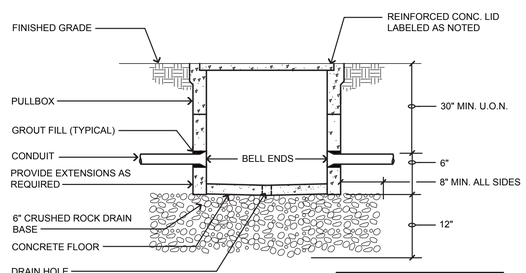

NOTE:
SIZE(S) & MFGR. AS NOTED ON SHEET E101-1

4 TYPICAL PULLBOX DETAIL

NO SCALE

JOB No:

REV:	DATE:	DESCRIPTION:

APN:
117-323-011-000

OUR LADY OF ASSUMPTION CHURCH
100 SALINAS ROAD
WATSONVILLE, CA

Sheet Title:
ELECTRICAL SPECIFICATIONS

Musser and associates
230 Capitol St
Salinas, CA. 93901
P (831) 424-2027
F (831) 771-2812

Copyright Notice:

REGISTERED PROFESSIONAL ENGINEER
ELDRIDGE O. BELL
No. E 17780
Exp. 6/30/22
ELECTRICAL
STATE OF CALIFORNIA

AURUM CONSULTING ENGINEERS
MONTEREY BAY, INC.

Project No. 17399.00

60 Garden Court • Suite 210 • Monterey, CA 93940
T.831.646.3330 • F.831.646.3336 • www.acemb.com

These drawings are instruments of service and are the property of AURUM CONSULTING ENGINEERS MONTEREY BAY, INC. All designs and other information in the drawings are for use on the specified project and shall not be used otherwise without the expressed written permission of AURUM CONSULTING ENGINEERS MONTEREY BAY, INC.

E
6.4

J:\Projects\17399.00 Our Lady of Assumption Church\Dwgs\E\17399.E6.4.dwg, 9/29/2021 4:49:51 PM, ellis,
AutoCAD PDF (General Documentation).pc3

This page intentionally left blank