Exhibit B

This page intentionally left blank.

EXHIBIT A
DRAFT RESOLUTION

Before the Zoning Administrator in and for the County of Monterey, State of California

In the matter of the application of:
PEBBLE BEACH COMPANY (AT&T Mobility) (PLN250239)
RESOLUTION NO. --
Resolution by the Monterey County Zoning Administrator:

1) Finding the project categorically exempt per section 15303 of the CEQA Guidelines; and
2) Approving a Combined Development Permit consisting of a 1.) Use Permit and Design Approval to allow the removal of an existing 27-9 foot high utility pole and installation of a wireless telecommunication facility consisting of a 40-5 foot high pole with one antenna and associated equipment; and 2.) Use Permit to exceed the required height of 30 feet established by the district.

[PLN250239, Pebble Beach Company (AT&T Mobility), 1063 Wranglers Trail Road, Greater Monterey Peninsula Area Plan (APN: 007-232-016-000)]

The Pebble Beach Company (AT&T Mobility) application (PLN250239) came on for public hearing before the Monterey County Zoning Administrator on October 30, 2025. Having considered all the written and documentary evidence, the administrative record, the staff report, oral testimony, and other evidence presented, the Zoning Administrator finds and decides as follows:

FINDINGS

1. **FINDING:** **CONSISTENCY** – The project, as conditioned, is consistent with the applicable plans and policies which designate this area as appropriate for development.

EVIDENCE:

a) During the course of review of this application, the project has been reviewed for consistency with the text, policies, and regulations in:
   - 2010 Monterey County General Plan;
   - Greater Monterey Peninsula Area Plan (GMPAP);
   - Monterey County Code (MCC) Zoning Ordinance Title 21

   No conflicts were found to exist. No communications were received during the course of review of the project indicating any inconsistencies with the text, policies, and regulations in these documents.

b) Allowed Use. The property is located adjacent to 1063 Wranglers Trail Road, Pebble Beach (APN 007-232-016-000), Greater Monterey Peninsula

Area Plan. The parcel is zoned Public Quasi Public in the Coastal Zone or [PQP]. The General Plan does not specify a land use designation for privately or publicly owned roads; however, the County considers such land use as Public/Quasi Public use, serving the public at large. Wireless communication facilities are a conditional use with a Use Permit in this zoning district, pursuant to Title 21 section 21.40.050.O. The project proposes to remove an existing 27-9 foot high utility pole and installation of a wireless telecommunication facility (WCF) consisting of a 40-5 foot high pole with one antenna and associated equipment greater than the height allowed for the zoning district. Therefore, the project is consistent with the zoning.

c) Lot Legality. The project is located in the Pacific Gas & Electric (PG&E) right-of-way (Coordinates 36.602223 N, -121.947405 W) and adjacent to 1063 Wranglers Trail, Pebble Beach.

d) Design and Visual Resources. Pursuant to Title 21, Chapter 21.44, the surrounding area are designated as a Design Control Zoning District ("D" zoning overlay), which is intended to regulate the location, size, configuration, materials, and colors of structures and fences to assure the protection of the public viewshed and neighborhood character. The proposed WCF will utilize the same material and colors as the existing utility pole, which is wooden dark brown. The development is surrounded by existing vegetation and will blend with the surrounding environment. Title 21 section 21.64.310.H sets design review criteria specific to wireless communication facilities including towers, monopoles, and support facilities shall be constructed of metal or other non-flammable material, shall be of a color approved by the appropriate authority, and special design of the telecommunication facilities may be required to mitigate potentially significant adverse visual impacts. The height of the pole is exempt through Title 21 section 21.62.030.B as the pole may be erected to a greater height than the limit established for the district in which they are to be located, subject a Use Permit. The project meets regulations for the siting, design, and construction of wireless communication facilities pursuant to Monterey County Code (MCC) Title 21 section 21.64.310.

The parcel is designated Sensitive for Visual Sensitivity in Figure 14 (Scenic Highway Corridors & Visual Sensitivity, in the GMPAP). This designation is due to the project being sited near adjacent to Monterey Peninsula Country Club. Pursuant to Title 21 section 21.64.310.H.1, wireless communication facilities should not be sited to create visual clutter or negatively affect specific views.

Title 21 section 21.62.030.B, towers, poles, water tanks and similar structures may be erected to a greater height than the limit established for the district in which they are to be located, subject to a Coastal Development Permit. Therefore, the project meets regulations for the siting, design, and construction of wireless communication facilities pursuant to Monterey County Code Title 21 section 21.64.310 and chapter 21.44.

e) Cultural Resources. According to Monterey County Geographic

Information System (GIS) records identifies the subject property to be within a high archaeological sensitivity area and is not within a known or potential archaeological resource area. An Archaeological Report (LIB070089) was previously conducted on the adjacent parcel and concluded the site to not have evidence of potential significant archaeological resources. A reconnaissance field study was conducted throughout the parcel and found the parcel did not contain materials frequently associated with prehistoric cultural resources in the Del Monte Forest area. The proposed project would be adjacent to this parcel in an area previously disturbed by the existing utility pole. The WCF would be in the same location and depth of the existing pole. An archaeological waiver was submitted to and approved by a designee of the Chief of Planning given that the proposed development does not involve land clearing and land disturbance of previously disturbed land due to the replacement pole going in the exact same location as the existing pole, and no cultural resources were discovered in the initial installation of the original existing pole. Staff has deemed that an archaeological report is not required under the Title 21 section 21.66.050. There is no evidence that any cultural resources would be disturbed, and the potential for inadvertent impacts to cultural resources is limited due to the development being located on previous minimal ground disturbance to replace a pre-existing wood pole. This will be controlled by application of the County's standard project condition (Condition No. 3), which requires the contractor to stop work if previously unidentified resources are discovered during construction.

f) Wireless Telecommunication Facility. As demonstrated in Finding 6 the Zoning Administrator is the Appropriate Authority to decide on new wireless communications facilities proposed on existing structures as it is interpreted that the proposed wireless facility will change the existing use of the PG&E transmission tower pursuant to MCC §21.64.310.I.

g) Land Use Advisory Committee. The project was referred to the Del Monte Forest Land Use Advisory Committee (LUAC) for review. The LUAC, at a noticed public meeting on September 18, 2025, unanimously voted to support the project as proposed.

h) County staff conducted a site visit to verify that the project location and height did not cause any adverse or visual impacts.

i) The application, project plans, and related support materials submitted by the project applicant to Monterey County HCD- Planning for the proposed development found in Project File PLN250239.

2. **FINDING:** **SITE SUITABILITY –** The site is physically suitable for the use proposed.

EVIDENCE:

a) The project has been reviewed for site suitability by the following departments and agencies: HCD-Planning, Pebble Beach Community Services District, HCD-Public Works, HCD-Environmental Services, and the Environmental Health Bureau. There has been no indication from these departments/agencies that the site is not suitable for the proposed development. Conditions recommended have been incorporated.

b) Staff identified potential impacts to resources. The following reports have been prepared:

- "Radio Frequency Emissions Compliance Report for AT&T Mobility" prepared by Waterford Consultants, Fredrick, MA, January 16th, 2025.

The above-mentioned technical reports by outside consultants indicated that there are no physical or environmental constraints that would indicate that the site is not suitable for the use proposed. County staff independently reviewed these reports and concurs with their conclusions. All development shall be in accordance with these reports.

c) The application, project plans, and related support materials submitted by the project applicant to the Monterey County HCD-Planning for the proposed development found in Project File PLN250239.

3. **FINDING:** **HEALTH AND SAFETY -** The establishment, maintenance, or operation of the project applied for will not under the circumstances of this particular case be detrimental to the health, safety, peace, morals, comfort, and general welfare of persons residing or working in the neighborhood of such proposed use, or be detrimental or injurious to property and improvements in the neighborhood or to the general welfare of the County.

EVIDENCE:

a) The project was reviewed by HCD-Planning, Pebble Beach Community Services District, HCD-Public Works, HCD-Environmental Services, and the Environmental Health Bureau. The respective agencies have recommended conditions, where appropriate, to ensure that the project will not have an adverse effect on the health, safety, and welfare of persons either residing or working in the neighborhood.

b) Necessary public facilities are available. The existing power pole will provide electricity. The proposed project will not require the use of water or sewer as it is an unmanned wireless communication facility.

c) A Radio-Frequency (RF) engineering analysis was prepared by Waterford Consultants, evaluating the proposed WCF. The report finds that the facility will comply with prevailing Federal Communications Commission (FCC) and Occupational Safety and Health Administration (OSHA) standards for limiting public exposure to radio frequency energy. This finding is consistent with measurements of actual exposure conditions taken at other operating base stations. The site is adequate for the proposed development of the wireless communication facility, and the applicant has demonstrated that it is the most adequate for the provision of services as required by the FCC.

d) Staff conducted a site inspection on October 7, 2025, to verify that the site is suitable for this use.

e) The application, project plans, and related support materials submitted by the project applicant to the Monterey County HCD-Planning for the proposed development found in Project File PLN250239.

4. **FINDING:** **NO VIOLATIONS -** The subject property is in compliance with all rules and regulations pertaining to zoning uses, subdivision, and any other applicable provisions of the County's zoning ordinance. No violations exist on the property.

EVIDENCE:

a) Staff reviewed Monterey County HCD-Planning and Building Services Department records and is not aware of any violations existing on subject property.

b) Staff conducted a site inspection on October 7th, 2025, and researched County records to assess if any violation exists on the subject property.
c) There are no known violations on the subject parcel (PG&E right-of-way).

d) The application, project plans, and related support materials submitted by the project applicant to the County of Monterey HCD - Planning for the proposed development found in Project File PLN250239.

5. **FINDING:** **CEQA (Exempt) –** The project is categorically exempt from environmental review, and no unusual circumstances were identified to exist for the proposed project. California Environmental Quality Act (CEQA) Guidelines §15303 categorically exempts the construction and location of new, small facilities or structures.

EVIDENCE:
a) The development will be removal of an existing 27-9 foot high utility pole and installation of a Wireless Telecommunications Facility consisting of 40-5 foot high pole, inclusive of a 2-foor canister antenna, a PG&E Smart Meter, and two (2) mounted radios. Due to the wireless facility is considered a small facility and the support structures are also small, they qualify for a categorical exemption as described in §15303 of the CEQA Guidelines.
b) None of the exceptions under CEQA Guidelines Section 15300.2 apply to this project. The project does not involve a designated historical resource, a hazardous waste site, unusual circumstances that would result in a significant effect, or development that would result in a cumulative significant impact. The project site does not contain environmentally sensitive habitat. Additionally, no scenic resources, such as trees, rock outcroppings, and historical buildings, within the scenic highway will be impacted by the proposed project. The development will neither create nor significantly contribute to geologic instability or geologic hazards. There is no substantial evidence that would support a fair argument that the project has a reasonable possibility of having a significant effect on the environment or that it would result in a cumulative significant impact.
c) The application, project plans, and related support materials submitted by the project applicant to Monterey County HCD-Planning for the proposed development found in Project File PLN250239.

6. **FINDING:** **WIRELESS COMMUNICATION FACILITIES** – The development of the proposed co-located wireless communications facility will not significantly affect any designated public viewing area, scenic corridor, or any identified environmentally sensitive area or resources. The site is adequate for the proposed development of the co-located wireless communications facility, and the applicant has demonstrated that it is the most adequate for the provision of services as required by the FCC. The proposed telecommunication facility will not create a hazard for aircraft in flight. The proposed co-located wireless communication facility complies with all applicable requirements of MCC §21.64.310. The subject property on which the wireless communication facility is to be built is in compliance with all rules and regulations pertaining to zoning

uses, subdivisions, and any other applicable provisions of MCC, and all zoning violation abatement costs, if any, have been paid.

EVIDENCE: a) This project consists of the removal of an existing 27-9 foot utility pole owned by Pacific Gas and Electric (PG&E) and installation of a Wireless Telecommunications Facility consisting of a 40-5- foot wooden pole and a 2-foot canister antenna. The development includes a PG&E Smart Meter, two (2) mounted radios, and a canister antenna, and new wooden pole. The property is located adjacent to 1063 Wranglers Trail, Pebble Beach.

b) Pursuant to the requirements in MCC §21.64.310(C), wireless communication facilities are allowed on any lot or parcel in any zoning district subject to the appropriate entitlement including the construction, modification, and placement of any antennas used for multi-channel distributions services and personal wireless service facilities. The proposed AT&T Mobility wireless facility changes the use of the existing PG&E transmission tower and therefore requires a Use Permit.

c) Site location and Analysis. The development is proposed to be located within an existing utility easement owned by PG&E on Wrangler Trail Road, which is a private road, owned and maintained by Pebble Beach Company. The General Plan does not specify a land use designation for privately or publicly owned roads; however, the County considers such land use as Public/Quasi Public use, serving the public at large. Accordingly, Title 21, section 21.40.050.O allows for WCF subject to a Use Permit in each case. Staff analyzed the proposed development for the best siting and location for the WCF. There is an existing utility pole, and the proposed development would replace this pole to allow AT&T to provide maximum coverage to its customers. The Applicant provided Service Coverage Maps illustrating this area to have poor coverage, and the proposed WCF would provide a clear and consistent mobile service within the area. According to Service Coverage Maps, the proposed facility is necessary to close significant service coverage gap area within Del Monte Forest. The proposed development is 40-5 feet tall and the zoning district of PQP has a maximum height of 30 feet for main structures. Title 21 section 21.62.030.B, towers, poles, water tanks and similar structures may be erected to a greater height than the limit established for the district in which they are to be located, subject to a Use Permit

Co-location. Title 21 section 21.64.310 encourages co-location of wireless facilities when possible. Co-location opportunities were analyzed for the proposed project. There are no existing WCF that could be used for co-location and meet the coverage objectives identified in the plan provided. However, the proposed development would be installed in the same location where an existing PG&E utility pole is located. The project includes the removal of the existing 27-9 foot utility pole and install a 40-5 foot WCF which includes two antennas, two radios and associated equipment. The project includes a condition to encourage future co-location by other wireless carriers (Condition No. 6).

c) Monterey County Code section 21.64.310(H)(b) encourages co-location of facilities and the Del Monte Forest Land Use Plan Visual Resources Chapter 2 within its Resource Management Element that protects the integrity of visual resources. As the tower will be raised 12.65-feet with minor additions, staff has found that this new facility will not substantially alter the visual impact of the existing pole.

d) The subject property of the existing lattice tower is in compliance with MCC rules and regulations pertaining to zoning uses, subdivisions, and any other applicable provisions, and all zoning violation abatement costs, if any, have been paid.

e) The project is consistent with MCC Chapter 21.86, Airport Approach Zoning, and does not require review by the Monterey County Airport Land Use Commission. This project does not affect any aircraft zones identified in MCC §21.86.050, and therefore need not comply with the heights outlined in MCC §21.86.060. The proposed telecommunication facility will not create a hazard for airport approaches or departures.

f) The project does not penetrate a FAR Part 77 Imaginary Surface. The project site is located approximately 5.7 miles from the Monterey Regional Airport, the nearest public use airport. If deemed necessary by the FCC, warning lights would be located on top of the structure to prevent conflict with any aircraft when visibility is limited. The proposed telecommunication facility will not create a hazard for aircraft in flight.

g) The project planner reviewed the project application materials and plans and the County GIS database to verify that the project on the subject parcel conforms to the plans listed above and that the site is suitable for this use. The application, plans, and supporting materials submitted by the project applicant to Monterey County HCD-Planning for the proposed development are found in Project File PLN250239.

7. **FINDING:** **APPEALABILITY -** The decision on this project may be appealed to the Planning Commission.

EVIDENCE: a) Planning Commission. Pursuant to §21.80.040 of the Monterey County Zoning Ordinance (Title 21), an appeal may be made to the Planning Commission by any public agency or person aggrieved by a decision of an Appropriate Authority other than the Board of Supervisors.

DECISION

NOW, THEREFORE, based on the above findings and evidence, the Zoning Administrator does hereby:

1. Find the project the project Categorically Exempt per Section 15303 of the CEQA Guidelines and does not meet any of the exceptions under Section 15300.2;
2. Approve a Combined Development Permit consisting of a 1.) Use Permit and Design Approval to allow the removal of an existing 27-9 foot high utility pole and installation of a wireless telecommunication facility consisting of a 40-5 foot high pole with one antenna and associated equipment; and 2.) Use Permit to exceed the required height of 30 feet established by the district.

PASSED AND ADOPTED this 30th day of October, 2025.

_____
Mike Novo, Zoning Administrator

COPY OF THIS DECISION MAILED TO APPLICANT ON _____.

THIS APPLICATION IS APPEALABLE TO THE BOARD OF SUPERVISORS. IF ANYONE WISHES TO APPEAL THIS DECISION, AN APPEAL FORM MUST BE COMPLETED AND SUBMITTED TO THE CLERK TO THE BOARD ALONG WITH THE APPROPRIATE FILING FEE ON OR BEFORE _____.

This decision, if this is the final administrative decision, is subject to judicial review pursuant to California Code of Civil Procedure Sections 1094.5 and 1094.6. Any Petition for Writ of Mandate must be filed with the Court no later than the 90th day following the date on which this decision becomes final.

NOTES

1. You will need a building permit and must comply with the Monterey County Building Ordinance in every respect.

   Additionally, the Zoning Ordinance provides that no building permit shall be issued, nor any use conducted, otherwise than in accordance with the conditions and terms of the permit granted or until ten days after the mailing of notice of the granting of the permit by the appropriate authority, or after granting of the permit by the Board of Supervisors in the event of appeal.

   Do not start any construction or occupy any building until you have obtained the necessary permits and use clearances from Monterey County HCD-Planning and HCD-Building Services offices in Salinas.

2. This permit expires 3 years after the above date of granting thereof unless construction or use is started within this period.

County of Monterey HCD Planning

DRAFT Conditions of Approval/Implementation Plan/Mitigation Monitoring and Reporting Plan

PLN250239

1. PD001 - SPECIFIC USES ONLY

Responsible Department: Planning

Condition/Mitigation Monitoring Measure: This Combined Development Permit (PLN250239) allows for 1.) Use Permit and Design Approval to allow the removal of an existing 27-9 foot high utility pole and installation of a wireless telecommunication facility consisting of a 40-5 foot high pole with one antenna and associated equipment; and 2.) Use Permit to exceed the required height of 30 feet established by the district. The project is located in the PG&E right-of-way, adjacent to the property located at 1063 Wranglers Trail Road, Pebble Beach (Assessor's Parcel Number 007-232-016-000), Greater Monterey Peninsula Area Plan. This permit was approved in accordance with County ordinances and land use regulations subject to the terms and conditions described in the project file. Neither the uses nor the construction allowed by this permit shall commence unless and until all of the conditions of this permit are met to the satisfaction of the Director of HCD - Planning. Any use or construction not in substantial conformance with the terms and conditions of this permit is a violation of County regulations and may result in modification or revocation of this permit and subsequent legal action. No use or construction other than that specified by this permit is allowed unless additional permits are approved by the appropriate authorities. To the extent that the County has delegated any condition compliance or mitigation monitoring to the Monterey County Water Resources Agency, the Water Resources Agency shall provide all information requested by the County and the County shall bear ultimate responsibility to ensure that conditions and mitigation measures are properly fulfilled. (HCD - Planning)

Compliance or Monitoring Action to be Performed: The Owner/Applicant shall adhere to conditions and uses specified in the permit on an on-going basis unless otherwise stated.

2. PD002 - NOTICE PERMIT APPROVAL

Responsible Department: Planning

Condition/Mitigation Monitoring Measure: The applicant shall record a Permit Approval Notice. This notice shall state:
"A Use Permit (Resolution Number _____) was approved by the Zoning Administrator for Assessor's Parcel Number 007-232-016-000 on October 30th, 2025. The permit was granted subject to 8 conditions of approval which run with the land. A copy of the permit is on file with Monterey County HCD - Planning."

Proof of recordation of this notice shall be furnished to the Director of HCD - Planning prior to issuance of grading and building permits, Certificates of Compliance, or commencement of use, whichever occurs first and as applicable. (HCD - Planning)

Compliance or Monitoring Action to be Performed: Prior to the issuance of grading and building permits, certificates of compliance, or commencement of use, whichever occurs first and as applicable, the Owner/Applicant shall provide proof of recordation of this notice to the HCD - Planning.

3. PD003(A) - CULTURAL RESOURCES NEGATIVE ARCHAEOLOGICAL REPORT

Responsible Department: Planning

Condition/Mitigation Monitoring Measure: If, during the course of construction, cultural, archaeological, historical or paleontological resources are uncovered at the site (surface or subsurface resources) work shall be halted immediately within 50 meters (165 feet) of the find until a qualified professional archaeologist can evaluate it. Monterey County HCD - Planning and a qualified archaeologist (i.e., an archaeologist registered with the Register of Professional Archaeologists) shall be immediately contacted by the responsible individual present on-site. When contacted, the project planner and the archaeologist shall immediately visit the site to determine the extent of the resources and to develop proper mitigation measures required for recovery.
(HCD - Planning)

Compliance or Monitoring Action to be Performed: The Owner/Applicant shall adhere to this condition on an on-going basis.

Prior to the issuance of grading or building permits and/or prior to the recordation of the final/parcel map, whichever occurs first, the Owner/Applicant shall include requirements of this condition as a note on all grading and building plans. The note shall state "Stop work within 50 meters (165 feet) of uncovered resource and contact Monterey County HCD - Planning and a qualified archaeologist immediately if cultural, archaeological, historical or paleontological resources are uncovered."

When contacted, the project planner and the archaeologist shall immediately visit the site to determine the extent of the resources and to develop proper mitigation measures required for the discovery.

4. PD039(A) - WIRELESS INDEMNIFICATION

Responsible Department: Planning

Condition/Mitigation Monitoring Measure: The applicant agrees as a condition and in consideration of the approval of the permit to enter into an indemnification agreement with the County whereby the applicant agrees to defend, indemnify, and hold harmless the County, its officers, agents and employees from actions or claims of any description brought on account of any injury or damages sustained by any person or property resulting from the issuance of the permit and conduct of the activities authorized under said permit. Applicant shall obtain the permission of the owner on which the wireless communication facility is located to allow the recordation of said indemnification agreement, and the applicant shall cause said indemnification agreement to be recorded by the County Recorder as a prerequisite to the issuance of the building and/or grading permit. The County shall promptly notify the applicant of any such claim, action, or proceeding and the County shall cooperate fully in the defense thereof. The County may, at its sole discretion, participate in the defense of such action, but such participation shall not relieve applicant of its obligations under this condition. (HCD - Planning)

Compliance or Monitoring Action to be Performed: Prior to the issuance of grading or building permits, the Owner/Applicant shall submit signed and notarized Indemnification Agreement to the Director of HCD-Planning for review and signature by the County.

Prior to the issuance of grading or building permits, the Owner/Applicant shall submit proof of recordation of the Indemnification Agreement, as outlined, to HCD-Planning.

5. PD039(B) - WIRELESS REDUCE VISUAL IMPACTS

Responsible Department: Planning

Condition/Mitigation Monitoring Measure: The applicant shall agree in writing that if future technological advances allow for reducing the visual impacts of the telecommunication facility, the applicant shall make modifications to the facility accordingly to reduce the visual impact as part of the facility's normal replacement schedule. (HCD - Planning)

Compliance or Monitoring Action to be Performed: Prior to the issuance of grading or building permits, the Owner/Applicant shall submit, in writing, a declaration agreeing to comply with the terms of this condition HCD - Planning for review and approval.

6. PD039(C) - WIRELESS CO-LOCATION

Responsible Department: Planning

Condition/Mitigation Monitoring Measure: The applicant and/or successors assigns shall encourage co-location by other wireless carriers on this tower assuming appropriate permits are approved for co-location. Any expansion or additions of microwave dishes, antennas and/or similar appurtenances located on the monopole, which are not approved pursuant to this permit, are not allowed unless the appropriate authority approves additional permits or waivers. In any case, the overall height of the pole shall not exceed the specified height. (HCD - Planning)

Compliance or Monitoring Action to be Performed: On an on-going basis, the Owner/Applicant shall encourage co-location by other wireless carriers on this tower assuming appropriate permits are approved for co-location. The overall height of the pole shall not exceed ___ feet.

7. PD039(D) - WIRELESS REMOVAL

Responsible Department: Planning

Condition/Mitigation Monitoring Measure: If the applicant abandons the facility or terminates the use, the applicant shall remove the monopole, panel antennas, and equipment shelter. Upon such termination or abandonment, the applicant shall enter into a site restoration agreement subject to the approval of the Director of HCD - Planning and County Counsel. The site shall be restored to its natural state within six (6) months of the termination of use or abandonment of the site.
(HCD - Planning)

Compliance or Monitoring Action to be Performed: Prior to abandoning the facility or terminating the use, the Owner/Applicant shall submit a site restoration agreement to HCD - Planning subject to the approval of the HCD - Director of Planning and County Counsel.

Within 6 months of termination of use or abandonment of the site, the Owner Applicant shall restore the site to its natural state.

8. PD039(E) - WIRELESS EMISSION

Responsible Department: Planning

Condition/Mitigation Monitoring Measure: The facility must comply with Federal Communications Commission (FCC) emission standards. If the facility is in violation of FCC emission standards, the Director of HCD - Planning shall set a public hearing before the Appropriate Authority whereupon the appropriate authority may, upon a finding based on substantial evidence that the facility is in violation of the then existing FCC emission standards, revoke the permit or modify the conditions of the permit. (HCD - Planning)

Compliance or Monitoring Action to be Performed: Prior to commencement of use and on an on-going basis, the Owner/Applicant shall submit documentation demonstrating compliance with the FCC emission standards to the Director of HCD-Planning for review and approval.

On an on-going basis, if the facility is in violation of FCC emission standards, the Director of HCD-Planning shall set a public hearing before the Appropriate Authority to consider revocation or modification of the permit.

CRAN_RSFR_PEBBL_002

(NEAR) 1063 WRANGLERS TRAIL ROAD
PEBBLE BEACH, CA 93953

SITE ID:	CRAN_RSFR_PEBBL_002
IWM:	WSSFR0048239
FA CODE:	16364871
SITE TYPE:	WOODEN PG&E UTILITY POLE
POLE #:	121378735
COUNTY:	MONTEREY

PROJECT TEAM

APPLICANT:
AT&T MOBILITY
5005 EXECUTIVE PARKWAY
SAN RAMON, CA 94583
CONTACT: MARC GRABISCH
EMAIL: MG387K@ATT.COM

AT&T MOBILITY PROJECT MANAGER:
AT&T MOBILITY
5005 EXECUTIVE PARKWAY
SAN RAMON, CA 94583
CONTACT: SEAN RANDALL
EMAIL: SR9530@ATT.COM

AT&T MOBILITY RF MANAGER:
5005 EXECUTIVE PARKWAY
SAN RAMON, CA 94583
CONTACT: HENRY PINEDA
EMAIL: HP088P@ATT.COM

PROJECT MANAGER:
NEXT EDGE
1355 WINDWARD CONCOURSE, SUITE 410
ALPHARETTA, GA 30005
PHONE: (707) 225-2865
EMAIL: JUSTIN.GIARRITTA@NEXTEDGENETWORKS.COM

A&E PROJECT MANAGER:
NEXT EDGE
1355 WINDWARD CONCOURSE, SUITE 410
ALPHARETTA, GA 30005
PHONE: (530) 305-6898
EMAIL: TODD.LAWRENCE@NEXTEDGENETWORKS.COM

CONSTRUCTION MANAGER:
NEXT EDGE
1355 WINDWARD CONCOURSE, SUITE 410
ALPHARETTA, GA 30005
PHONE: (415) 989.1102
EMAIL: ATTPROJECTTEAM@MODUSLLC.COM

PROJECT DESCRIPTION

AT&T PROPOSES TO INSTALL A NEW WIRELESS COMMUNICATION SITE ON A WOODEN PG&E UTILITY POLE

SCOPE:

- INSTALL (1) NEW 2' CANISTER ANTENNA ON TOP OF WOODEN PG&E UTILITY POLE
- INSTALL (1) NEW RADIO 4490 AND (1) RADIO 4890 ON WOODEN PG&E UTILITY POLE
- INSTALL (2) NEW PSU AC08 ON WOODEN PG&E UTILITY POLE
- INSTALL (1) NEW COAX CONDUIT FROM EQUIPMENT TO NEW CANISTER ANTENNA
- INSTALL (1) NEW POWER CONDUIT FROM P.O.C. TO EQUIPMENT
- INSTALL (1) NEW FIBER CONDUIT FROM P.O.C. TO EQUIPMENT
- INSTALL (1) NEW EQUIPMENT BRACKET
- INSTALL (1) NEW SMART METER / DISCONNECT
- CABLING TO BE INSTALLED IN A TIGHT NEAT MANNER WITHOUT EXCESS CABLE LOOPS
- ALL AT&T ADDED APPURTENANCES SHALL BE PAINTED TO MATCH POLE COLOR (NON-GLOSSY "SABLE" BY SHERWIN WILLIAMS, OR EQUIVALENT)
- EXISTING WOOD UTILITY POLE TO BE REPLACED WITH NEW WOOD UTILITY POLE BY PG&E

DRAWING INDEX

SHEET NO.	SHEET TITLE
T-1	TITLE SHEET
T-2	GENERAL NOTES
C-1	SURVEY
A-1	SITE PLAN
A-2	ENLARGED SITE PLAN & PROPOSED EQUIPMENT LAYOUT PLANS
A-3	ELEVATIONS
A-4	ELEVATIONS
D-1	DETAILS
D-2	DETAILS
E-1	ELECTRICAL GENERAL NOTES
E-2	ONE-LINE DIAGRAM & GROUNDING SCHEMATIC
E-3	ELECTRICAL DETAILS
TCP-1	TRAFFIC CONTROL PLAN

POLE PHOTO

VICINITY MAP

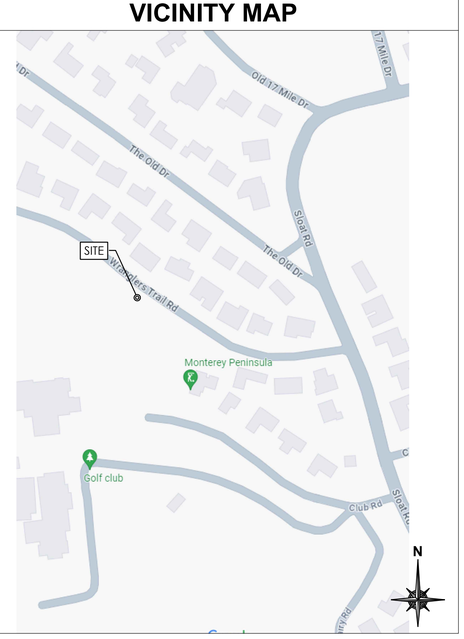

SITE INFORMATION

SITE ADDRESS:	(NEAR) 1063 WRANGLERS TRAIL ROAD PEBBLE BEACH, CA 93953
OWNER:	PG&E 1 MARKET STREET, SPEAR TOWER SAN FRANCISCO, CA 94105-1126
APPLICANT:	AT&T MOBILITY 5005 EXECUTIVE PARKWAY SAN RAMON, CA 94583
LATITUDE:	36.602223° N NAD83
LONGITUDE:	-121.947405° W NAD83
COUNTY:	MONTEREY
JURISDICTION:	PEBBLE BEACH
ASSESSORS PARCEL NUMBER:	NEAR 007-232-016-000
ZONING:	MDR/B-6-D-RES
ELEVATION:	109.964' AMSL

CALL 811 BEFORE YOU DIG
IT'S THE LAW

THE UTILITIES SHOWN HEREIN ARE FOR THE CONTRACTORS CONVENIENCE ONLY. THERE MAY BE OTHER UTILITIES NOT SHOWN ON THESE PLANS. THE ENGINEER/SURVEYOR ASSUMES NO RESPONSIBILITY FOR THE LOCATIONS SHOWN AND IT SHALL BE THE CONTRACTOR'S RESPONSIBILITY TO VERIFY ALL THE UTILITIES WITHIN THE LIMITS OF THE WORK. ALL DAMAGE MADE TO THE (E) UTILITIES BY THE CONTRACTOR SHALL BE THE SOLE RESPONSIBILITY OF THE CONTRACTOR.

CODE COMPLIANCE

ALL WORK AND MATERIALS SHALL BE PERFORMED AND INSTALLED IN ACCORDANCE WITH THE CURRENT EDITIONS OF THE FOLLOWING CODES AS ADOPTED BY THE LOCAL GOVERNING AUTHORITIES. NOTHING IN THESE PLANS IS TO BE CONSTRUCTED TO PERMIT WORK NOT CONFORMING TO THESE CODES.

- 2022 CALIFORNIA BUILDING CODE (CBC), BASED ON THE 2021 IBC
- 2022 CALIFORNIA ELECTRICAL CODE (CEC), BASED ON THE 2020 NEC
- 2022 CALIFORNIA MECHANICAL CODE (CMC), BASED ON THE 2021 UMC
- 2022 CALIFORNIA PLUMBING CODE (CPC), BASED ON THE 2021 UPC
- 2022 CALIFORNIA GREEN BUILDINGS STANDARDS CODE (CALGREEN)
- 2022 CALIFORNIA FIRE CODES WITH ALL LOCAL AMENDMENTS, BASED ON THE 2021 IFC
- ANY LOCAL BUILDING CODE AMENDMENTS TO THE ABOVE
- CALIFORNIA GENERAL ORDER 95 (G.O. 95, 2020)
- NCJPA OPERATIONS/ ROUTINE HANDBOOK (2019)
- NATIONAL ELECTRICAL CODE (NEC) (2023 EDITION)
- NATIONAL ELECTRICAL SAFETY CODE IEEE C2 2023 (NESC)
- CITY / COUNTY ORDINANCES

ACCESSIBILITY REQUIREMENTS FOR PERSONS WITH DISABILITIES:
FACILITY IS UNMANNED AND NOT FOR HUMAN HABITATION. ACCESSIBILITY IS NOT REQUIRED IN ACCORDANCE WITH CALIFORNIA ADMINISTRATIVE STATE CODE PART 2, TITLE 24, CHAPTER 11B, SECTION 1103B.

AT&T
5005 EXECUTIVE PARKWAY
SAN RAMON, CA
94583

NextEdge
1355 WINDWARD CONCOURSE,
SUITES 410
ALPHARETTA, GA
30005

DRAWN BY:	JLV
CHECKED BY:	TDL
APPROVED BY:	CW

REV	DATE	DESCRIPTION
	01/14/25	90% CD
0	01/27/25	100% CD

REGISTERED PROFESSIONAL ENGINEER
CHRISTOPHER R. WEBER
No.65117
Exp. 09/30/25
CIVIL
STATE OF CALIFORNIA

IT IS A VIOLATION OF THE LAW FOR ANY PERSON, UNLESS THEY ARE ACTING UNDER THE DIRECTION OF A LICENSED PROFESSIONAL ENGINEER, TO ALTER THIS DOCUMENT

CRAN_RSFR_PEBBL_002
(NEAR) 1063 WRANGLERS TRAIL ROAD
PEBBLE BEACH, CA 93953

TITLE SHEET

T-1

GENERAL NOTES

GENERAL CONSTRUCTION NOTES

1. PLANS ARE INTENDED TO BE DIAGRAMMATIC ONLY, UNLESS NOTED OTHERWISE. THE WORK SHALL INCLUDE FURNISHING MATERIALS, EQUIPMENT, APPURTENANCES AND LABOR NECESSARY TO COMPLETE ALL INSTALLATIONS AS INDICATED ON THE DRAWINGS.

2. THE CONTRACTOR SHALL OBTAIN, IN WRITING, AUTHORIZATION TO PROCEED BEFORE STARTING WORK ON ANY ITEM NOT CLEARLY DEFINED OR IDENTIFIED BY THE CONTRACT DOCUMENTS.

3. CONTRACTOR SHALL CONTACT USA (UNDERGROUND SERVICE ALERT) AT (800) 227-2600, FOR UTILITY LOCATIONS, 2 WORKING DAYS BEFORE PROCEEDING WITH ANY EXCAVATION, SITE WORK OR CONSTRUCTION.

4. THE CONTRACTOR SHALL INSTALL ALL EQUIPMENT AND MATERIALS IN ACCORDANCE WITH MANUFACTURER'S RECOMMENDATIONS UNLESS SPECIFICALLY INDICATED OTHERWISE, OR WHERE LOCAL CODES OR REGULATIONS TAKE PRECEDENCE.

5. ALL CONSTRUCTION SHALL BE IN ACCORDANCE WITH THE CBC'S REQUIREMENTS REGARDING EARTHQUAKE RESISTANCE, FOR, BUT NOT LIMITED TO, PIPING, LIGHT FIXTURES, CEILING GRID, INTERIOR PARTITIONS, AND MECHANICAL EQUIPMENT. ALL WORK MUST COMPLY WITH LOCAL EARTHQUAKE CODES AND REGULATIONS.

6. REPRESENTATIONS OF TRUE NORTH, OTHER THAN THOSE FOUND ON THE PLOT OF SURVEY DRAWINGS, SHALL NOT BE USED TO IDENTIFY OR ESTABLISH BEARING OF TRUE NORTH AT THE SITE. THE CONTRACTOR SHALL RELY SOLELY ON THE PLOT OF SURVEY DRAWING AND ANY SURVEYOR'S MARKINGS AT THE SITE FOR THE ESTABLISHMENT OF TRUE NORTH, AND SHALL NOTIFY THE ARCHITECT / ENGINEER PRIOR TO PROCEEDING WITH THE WORK IF ANY DISCREPANCY IS FOUND BETWEEN THE VARIOUS ELEMENTS OF THE WORKING DRAWINGS AND THE TRUE NORTH ORIENTATION AS DEPICTED ON THE CIVIL SURVEY. THE CONTRACTOR SHALL ASSUME SOLE LIABILITY FOR ANY FAILURE TO NOTIFY THE ARCHITECT / ENGINEER.

7. THE BUILDING DEPARTMENT ISSUING THE PERMITS SHALL BE NOTIFIED AT LEAST TWO WORKING DAYS PRIOR TO THE COMMENCEMENT OF WORK, OR AS OTHERWISE STIPULATED BY THE CODE ENFORCEMENT OFFICIAL HAVING JURISDICTION.

8. DO NOT EXCAVATE OR DISTURB BEYOND THE PROPERTY LINES OR LEASE AREA LINES, UNLESS OTHERWISE NOTED.

9. ALL EXISTING UTILITIES, FACILITIES, CONDITIONS, AND THEIR DIMENSIONS SHOWN ON THE PLAN HAVE BEEN PLOTTED FROM AVAILABLE RECORDS. THE ARCHITECT / ENGINEER AND THE OWNER ASSUME NO RESPONSIBILITY WHATSOEVER AS TO THE SUFFICIENCY OR THE ACCURACY OF THE INFORMATION SHOWN ON THE PLANS, OR THE MANNER OF THEIR REMOVAL OR ADJUSTMENT. CONTRACTORS SHALL BE RESPONSIBLE FOR DETERMINING EXACT LOCATION OF ALL EXISTING UTILITIES AND FACILITIES PRIOR TO START OF CONSTRUCTION. CONTRACTORS SHALL ALSO OBTAIN FROM EACH UTILITY COMPANY DETAILED INFORMATION RELATIVE TO WORKING SCHEDULES AND METHODS OF REMOVING OR ADJUSTING EXISTING UTILITIES.

10. CONTRACTOR SHALL VERIFY ALL EXISTING UTILITIES, BOTH HORIZONTAL AND VERTICALLY, PRIOR TO THE START OF CONSTRUCTION. ANY DISCREPANCIES OR DOUBTS AS TO THE INTERPRETATION OF PLANS SHOULD BE IMMEDIATELY REPORTED TO THE ARCHITECT / ENGINEER FOR RESOLUTION AND INSTRUCTION, AND NO FURTHER WORK SHALL BE PERFORMED UNTIL THE DISCREPANCY IS CHECKED AND CORRECTED BY THE ARCHITECT / ENGINEER. FAILURE TO SECURE SUCH INSTRUCTION MEANS CONTRACTOR WILL HAVE WORKED AT HIS/HER OWN RISK AND EXPENSE.

11. ALL NEW AND EXISTING UTILITY STRUCTURES ON SITE AND IN AREAS TO BE DISTURBED BY CONSTRUCTION SHALL BE ADJUSTED TO FINISH ELEVATIONS PRIOR TO FINAL INSPECTION OF WORK.

12. ANY EXISTING COMPONENTS DISTURBED DURING CONSTRUCTION SHALL BE RETURNED TO IT'S ORIGINAL CONDITION PRIOR TO COMPLETION OF WORK. SIZE, LOCATION AND TYPE OF ANY UNDERGROUND UTILITIES OR IMPROVEMENTS SHALL BE ACCURATELY NOTED AND PLACED ON "AS-BUILT" DRAWINGS BY GENERAL CONTRACTOR, AND ISSUED TO THE ARCHITECT / ENGINEER AT COMPLETION OF PROJECT.

13. ALL TEMPORARY EXCAVATIONS FOR THE INSTALLATION OF FOUNDATIONS, UTILITIES, ETC., SHALL BE PROPERLY LAID BACK OR BRACED IN ACCORDANCE WITH CORRECT OCCUPATIONAL SAFETY AND HEALTH ADMINISTRATION (OSHA) REQUIREMENTS.

GENERAL NOTES FOR EXISTING CELL SITES

1. PRIOR TO THE SUBMISSION OF BIDS, THE BIDDING CONTRACTOR SHALL VISIT THE CELL SITE TO FAMILIARIZE WITH THE EXISTING CONDITIONS AND TO CONFIRM THAT THE WORK CAN BE ACCOMPLISHED AS SHOWN ON THE CONSTRUCTION DRAWINGS. ANY DISCREPANCY FOUND SHALL BE BROUGHT TO THE ATTENTION OF CONTRACTOR.

2. CONTRACTOR SHALL VERIFY ALL EXISTING DIMENSIONS AND CONDITIONS PRIOR TO COMMENCING ANY WORK. ALL DIMENSIONS OF EXISTING CONSTRUCTION SHOWN ON THE DRAWINGS MUST BE VERIFIED. CONTRACTOR SHALL NOTIFY THE CONSTRUCTION MANAGER OF ANY DISCREPANCIES PRIOR TO ORDERING MATERIAL OR PROCEEDING WITH CONSTRUCTION.

3. THE EXISTING CELL SITE IS IN FULL COMMERCIAL OPERATION. ANY CONSTRUCTION WORK BY CONTRACTOR SHALL NOT DISRUPT THE EXISTING NORMAL OPERATION. ANY WORK ON EXISTING EQUIPMENT MUST BE COORDINATED WITH CONTRACTOR. ALSO, WORK SHOULD BE SCHEDULED FOR AN APPROPRIATE MAINTENANCE WINDOW USUALLY IN LOW TRAFFIC PERIODS AFTER MIDNIGHT.

4. SINCE THE CELL SITE IS ACTIVE, ALL SAFETY PRECAUTIONS MUST BE TAKEN WHEN WORKING AROUND HIGH LEVELS OF ELECTROMAGNETIC RADIATION. EQUIPMENT SHOULD BE SHUTDOWN PRIOR TO PERFORMING ANY WORK THAT COULD EXPOSE THE WORKERS TO DANGER. PERSONAL RF EXPOSURE MONITORS ARE ADVISED TO BE WORN TO ALERT OF ANY DANGEROUS EXPOSURE LEVELS.

5. CONTRACTOR SHALL DETERMINE ACTUAL ROUTING OF CONDUIT, POWER AND T1 CABLES, GROUNDING CABLES AS SHOWN ON THE POWER, GROUNDING AND TELCO PLAN DRAWING. CONTRACTOR SHALL UTILIZE EXISTING TRAYS AND/OR SHALL ADD (N) TRAYS AS NECESSARY. CONTRACTOR SHALL CONFIRM THE ACTUAL ROUTING WITH THE CONTRACTOR.

6. CONTRACTOR SHALL LEGALLY AND PROPERLY DISPOSE OF ALL SCRAP MATERIALS SUCH AS COAXIAL CABLES AND OTHER ITEMS REMOVED FROM THE EXISTING FACILITY. ANTENNAS REMOVED SHALL BE RETURNED TO THE OWNER'S DESIGNATED LOCATION.

APPLICABLE CODES, REGULATIONS AND STANDARDS:

1. CONTRACTOR'S WORK SHALL COMPLY WITH ALL APPLICABLE NATIONAL, STATE, AND LOCAL CODES AS ADOPTED BY THE LOCAL AUTHORITY HAVING JURISDICTION (AHJ) FOR THE LOCATION.

2. THE EDITION OF THE AHJ ADOPTED CODES AND STANDARDS IN EFFECT ON THE TIME OF PERMITTING AWARD SHALL GOVERN THE DESIGN.

3. CONTRACTOR'S WORK SHALL COMPLY WITH THE LATEST EDITION OF THE FOLLOWING STANDARDS:
   - 3.1. - AMERICAN CONCRETE INSTITUTE (ACI) 318, BUILDING CODE REQUIREMENTS FOR STRUCTURAL CONCRETE
   - 3.2. - AMERICAN INSTITUTE OF STEEL CONSTRUCTION (AISC), MANUAL OF STEEL CONSTRUCTION, ASD, NINTH EDITION
   - 3.3. - TELECOMMUNICATIONS INDUSTRY ASSOCIATION (TIA) 222-F, STRUCTURAL STANDARD FOR STRUCTURAL ANTENNA TOWER AND ANTENNA SUPPORTING STRUCTURES
   - 3.4. - INSTITUTE FOR ELECTRICAL AND ELECTRONICS ENGINEERS (IEEE) 81, GUIDE FOR MEASURING EARTH RESISTIVITY, GROUND IMPEDANCE, AND EARTH SURFACE POTENTIALS OF A GROUND SYSTEM IEEE 1100 (1999) RECOMMENDED PRACTICE FOR POWERING AND GROUNDING OF ELECTRICAL EQUIPMENT.
   - 3.5. -IEEE C62.41, RECOMMENDED PRACTICES ON SURGE VOLTAGES IN LOW VOLTAGE AC POWER CIRCUITS (FOR LOCATION CATEGORY "C3" AND "HIGH SYSTEM EXPOSURE")

4. TIA 607 COMMERCIAL BUILDING GROUNDING AND BONDING REQUIREMENTS FOR TELECOMMUNICATIONS
   - 4.1. TELCORDIA GR-63 NETWORK EQUIPMENT-BUILDING SYSTEM (NEBS): PHYSICAL PROTECTION
   - 4.2. TELCORDIA GR-347 CENTRAL OFFICE POWER WIRING
   - 4.3. TELCORDIA GR-1275 GENERAL INSTALLATION REQUIREMENTS
   - 4.4. TELCORDIA GR-1503 COAXIAL CABLE CONNECTIONS

5. ANY AND ALL OTHER LOCAL & STATE LAWS AND REGULATIONS

6. FOR ANY CONFLICTS BETWEEN SECTIONS OF LISTED CODES AND STANDARDS REGARDING MATERIAL, METHODS OF CONSTRUCTION, OR OTHER REQUIREMENTS, THE MOST RESTRICTIVE SHALL GOVERN. WHERE THERE IS CONFLICT BETWEEN A GENERAL REQUIREMENT AND A SPECIFIC REQUIREMENT, THE SPECIFIC REQUIREMENT SHALL GOVERN.

GENERAL TRENCHING NOTES

1. MAINTAIN 24" MINIMUM COVER FOR ALL ELECTRICAL CONDUITS, U.O.N.
2. MAINTAIN 30" MINIMUM COVER FOR ALL TELECOMMUNICATIONS CONDUITS.
3. MINIMUM 1" SAND SHADING BELOW CONDUITS, AND 6" COVERING ON TOP OF CONDUITS REQUIRED.
4. REFER TO SHEET E-1 FOR ADDITIONAL REQUIREMENTS

GENERAL GROUNDING NOTES

1. GROUNDING SHALL BE TESTED AT 5 OHMS OR LESS.
2. WOOD MOLDING, STAPLED EVERY 3'-0" AND AT EACH END.

GENERAL CONDUIT NOTES

1. ALL CONDUITS WILL BE MANDRELED AND EQUIPPED WITH 3/8" PULL ROPE.
2. SCHEDULE 40 CONDUIT FOR UNDERGROUND USE.
3. SCHEDULE 80 CONDUIT FOR RISER USE AND ELSEWHERE AS NOTES. TRANSITION FROM SCHEDULE 40 PVC OR RIGID STEEL CONDUIT TO SCHEDULE 80 USING APPROVED FITTINGS DESIGNED TO PROVIDE A SMOOTH INTERIOR WALL TRANSITION TO THE REDUCED INTERIOR DIAMETER OF SCHEDULE 80. ADJUST CONDUIT SIZE IF NECESSARY TO MAINTAIN THE INTERIOR AREA REQUIRED FOR THE WIRING SPECIFIED.
4. GALVANIZED STEEL CONDUIT FOR ANY CONDUIT UNDER 3", STUB UP 10" THEN CONVERT TO SCHEDULE 80.
5. CONTRACTOR TO STUB UP POLE 10" w/ 3" POWER CONDUIT. POWER COMPANY TO CONVERT FROM 3" STUB SCHEDULE 80 TO 2" SCHEDULE 80 FROM TOP OF STUB UP.
6. ZRC COLD GALVANIZING COMPOUND OR EQUIVALENT IS REQUIRED ON EXPOSED THREADS IN RIGID STEEL CONDUIT AND THE CUT ENDS OF SUPPORT STRUTS, ETC. TO PREVENT RUSTING.

TYPICAL R.O.W. POLE CONSTRUCTION NOTES

1. CABLE NOT TO IMPEDE 15" CLEAR SPACE OFF POLE FACE.
2. ALL CLIMB STEPS NEXT TO CONDUIT SHALL HAVE EXTENDED STEPS.
3. NO BOLT THREADS TO PROTRUDE MORE THAN 1-1/2"
4. ALL HOLES IN POLE LEFT FROM REARRANGEMENT OF CLIMB STEPS TO BE FILLED.
5. 90° SHORT SWEEPS UNDER ANTENNA ARM. ALL CABLES MUST TRANSITION ON THE INSIDE OR BOTTOM OF THE ARM (NO CABLE ON TOP OF ARM).
6. USE 90° CONNECTOR AT CABLE CONNECTION FOR OMNI DOWN ANTENNAS.
7. USE CABLE CLAMPS TO SECURE CABLE TO ARMS, PLACE 2" AT&T WIRELESS CABLE I.D. TAGS ON BOTH SIDES OF ARMS.
8. USE 1/2" DIA. CABLE ON ANTENNAS UNLESS OTHERWISE SPECIFIED.
9. PLACE GPS ON ARM OF SOUTHERN SKY EXPOSURE AT MINIMUM 6" FROM TRANSMIT ANTENNA WHICH IS 24" AWAY FROM CENTER OF POLE.
10. FILL VOID AROUND CABLES AT CONDUIT OPENING WITH FOAM SEALANT TO PREVENT WATER INTRUSION.

CONTRACTOR REQUIREMENTS

DO NOT SCALE OFF DRAWINGS

CONTRACTOR SHALL VERIFY ALL PLANS & EXISTING DIMENSIONS & CONDITIONS ON THE JOB SITE & SHALL IMMEDIATELY NOTIFY THE ENGINEER IN WRITING OF ANY DISCREPANCIES BEFORE PROCEEDING WITH THE WORK

ABBREVIATIONS

A.B.	ANCHOR BOLT
ABV.	ABOVE
ACCA	ANTENNA CABLE COVER ASSEMBLY
ADD'L	ADDITIONAL
A.F.F.	ABOVE FINISHED FLOOR
A.F.G.	ABOVE FINISHED GRADE
AGL	ABOVE GROUND LEVEL
ALUM	ALUMINUM
ALT.	ALTERNATE
AMSL	ABOVE SEA LEVEL
ANT.	ANTENNA
APPRX.	APPROXIMATE(LY)
ARCH.	ARCHITECT(URAL)
AWG.	AMERICAN WIRE GAUGE
BLDG.	BUILDING
BLK.	BLOCK
BLKG	BLOCKING
BM.	BEAM
B.N.	BOUNDARY NAILING
BN	BACK-UP CABINET
BTCW.	BARE TINNED COPPER WIRE
B.O.	BOTTOM
B.O.F.	BOTTOM OF FOOTING
CAB.	CABINET
CANT.	CANTILEVER(ED)
C.I.P.	CAST IN PLACE
CLG.	CEILING
℄	CENTERLINE
CLR.	CLEAR
COL.	COLUMN
CONC.	CONCRETE
CONN.	CONNECTION(OR)
CONST.	CONSTRUCTION
CONT.	CONTINUOUS
d	PENNY (NAILS)
DBL.	DOUBLE
DEPT.	DEPARTMENT
D.F.	DOUGLAS FIR
DIA.	DIAMETER
DIAG.	DIAGONAL
DIM.	DIMENSION
DWG.	DRAWING(S)
DWL.	DOWEL(S)
EA.	EACH
EL.	ELEVATION
ELEC.	ELECTRICAL
ELEV.	ELEVATOR
EMT.	ELECTRICAL METALLIC TUBING
E.N.	EDGE NAIL
ENG.	ENGINEER
EQ.	EQUAL
EXP.	EXPANSION
EXST.(E)	EXISTING
EXT.	EXTERIOR
FAB.	FABRICATION(OR)
F.F.	FINISH FLOOR
F.G.	FINISH GRADE
FIN.	FINISH(ED)
FLR.	FLOOR
FDN.	FOUNDATION
F.O.C.	FACE OF CONCRETE
F.O.M.	FACE OF MASONRY
F.O.S.	FACE OF STUD
F.O.W.	FACE OF WALL
F.S.	FINISH SURFACE
FT.(')	FOOT(FEET)
FTG.	FOOTING
G.	GROWTH(CABINET)
GA.	GAUGE
GI.	GALVANIZE(D)
G.F.I.	GROUND FAULT CIRCUIT INTERRUPTER
GLB. (GLU-LAM)	GLUE LAMINATED BEAM
GPS	GLOBAL POSITIONING SYSTEM
GRND.	GROUND
HDR.	HEADER
HGR.	HANGER
HT.	HEIGHT
ICGB.	ISOLATED COPPER GROUND BUS
IN.(")	INCH(ES)
INT.	INTERIOR
LB.(#)	POUND(S)
L.B.	LAG BOLTS
L.F.	LINEAR FEET(FOOT)
L.	LONGITUDINAL
MAS.	MASONRY
MAX.	MAXIMUM
M.B.	MACHINE BOLT
MECH.	MECHANICAL
MFR.	MANUFACTURER
MIN.	MINIMUM
MISC.	MISCELLANEOUS
MTL.	METAL
NO.(#)	NUMBER
N.T.S.	NOT TO SCALE
(N)	NEW
O.C.	ON CENTER
OPNG.	OPENING
P/C	PRE CAST CONCRETE
PCS	PERSONAL COMMUNICATION SERVICES
ℙ	PLATE
PLY.	PLYWOOD
PPC.	POWER PROTECTION CABINET
PRC.	PRIMARY FLEXING CABINET
P.S.F.	POUNDS PER SQUARE FOOT
P.S.I.	POUNDS PER SQUARE INCH
P.T.	PRESSURE TREATED
PWR.	POWER (CABINET)
QTY.	QUANTITY
RAD.(R)	RADIUS
REF.	REFERENCE
REINF.	REINFORCING
REQ'D.	REQUIRED
RGS.	RIGID GALVANIZED STEEL
R.O.W.	RIGHT OF WAY
SCH.	SCHEDULE
SHT.	SHEET
SIM.	SIMILAR
SPEC.	SPECIFICATION(S)
SQ.	SQUARE
S.S.	STAINLESS STEEL
STD.	STANDARD
STL.	STEEL
STRUC.	STRUCTURAL
TEMP.	TEMPORARY
THK.	THICKNESS
T.N.	TOE NAIL
T.O.A.	TOP OF ANTENNA
T.O.C.	TOP OF CURB
T.O.F.	TOP OF FOUNDATION
T.O.P.	TOP OF PLATE(PARAPET)
T.O.S.	TOP OF STEEL
T.O.W.	TOP OF WALL
TYP.	TYPICAL
U.G.	UNDER GROUND
U.L.	UNDERWRITES LABORATORY
U.N.O.	UNLESS NOTED OTHERWISE
V.I.F.	VERIFY IN FIELD
W	WIDE(WIDTH)
W/	WITH
WD.	WOOD
W.P.	WEATHERPROOF
WT.	WEIGHT

LEGEND

SPOT ELEVATION	STEEL
REVISION	GROUT OR PLASTER
GRID REFERENCE	(E) BRICK
DETAIL REFERENCE	(E) MASONRY
ELEVATION REFERENCE	CONCRETE
SECTION REFERENCE	EARTH
MATCH LINE	GRAVEL
WORK POINT	PLYWOOD
	SAND
	CENTERLINE
	PROPERTY/LEASE LINE
	GROUND CONDUCTOR
T	TELEPHONE CONDUIT
E	ELECTRICAL CONDUIT
E/T	ELECTRICAL & TELCO CONDUITS
A	COAXIAL CABLE
O/H	OVERHEAD LINES
X	CHAIN LINK FENCING
	WOOD FENCING
OHT/OHP	OVERHEAD COMM/ OVERHEAD POWER

AT&T
5005 EXECUTIVE PARKWAY
SAN RAMON, CA
94583

NextEdge

1355 WINDWARD CONCOURSE,
SUITES 410
ALPHARETTA, GA
30005

DRAWN BY:	JLV
CHECKED BY:	TDL
APPROVED BY:	CW

REV	DATE	DESCRIPTION
	01/14/25	90% CD
0	01/27/25	100% CD

REGISTERED PROFESSIONAL ENGINEER
CHRISTOPHER R. WALK
No.85117
Exp. 09/30/25
CIVIL
STATE OF CALIFORNIA

IT IS A VIOLATION OF THE LAW FOR ANY PERSON, UNLESS THEY ARE ACTING UNDER THE DIRECTION OF A LICENSED PROFESSIONAL ENGINEER, TO ALTER THIS DOCUMENT

CRAN_RSFR_PEBBL_002
(NEAR) 1063 WRANGLERS
TRAIL ROAD
PEBBLE BEACH, CA 93953

GENERAL NOTES

T-2

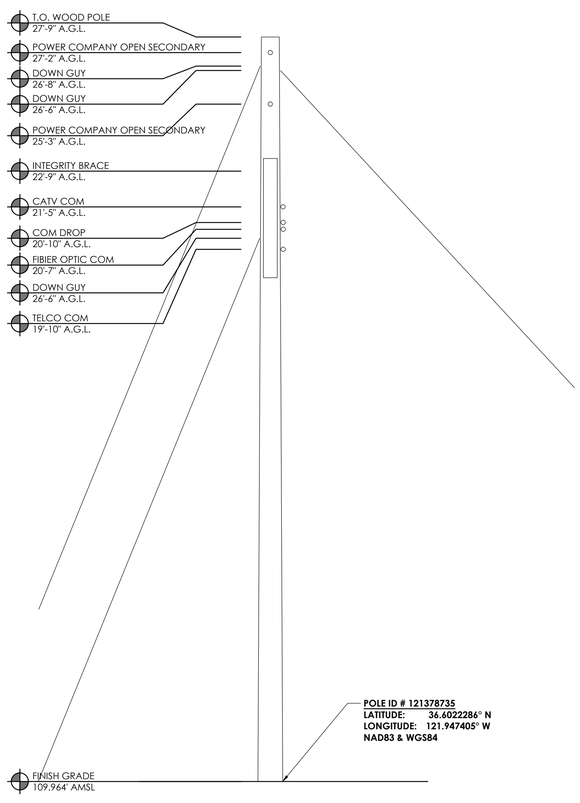

ELEVATION

SCALE	
3/8"=1'-0"	2

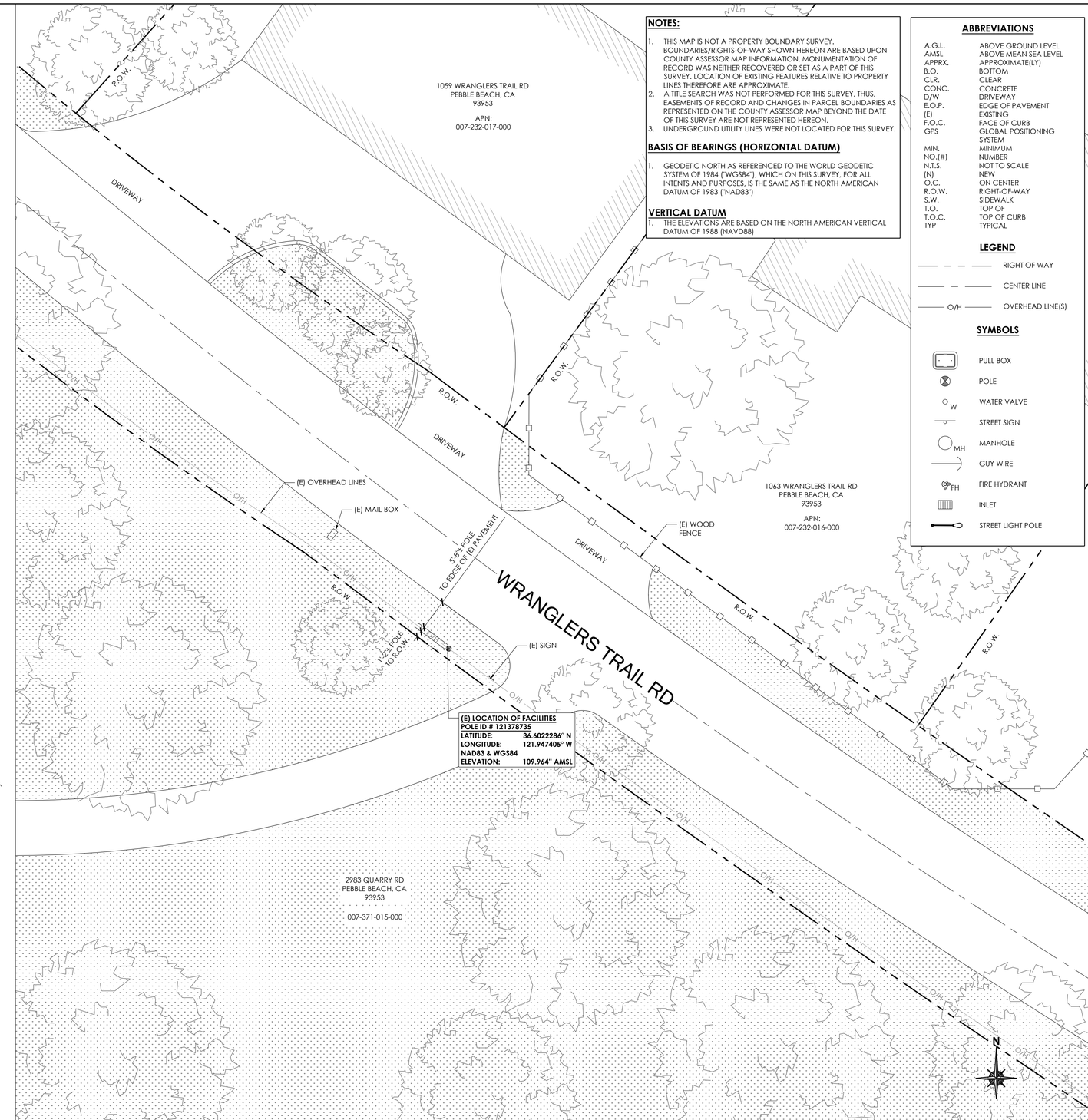

24"x36" SCALE: 1" = 10'
11"x17" SCALE: 1" = 20'
10' 5' 0' 10'

SCALE	
1"=10'-0"	1

SITE PLAN

NOTES:

1. THIS MAP IS NOT A PROPERTY BOUNDARY SURVEY. BOUNDARIES/RIGHTS-OF-WAY SHOWN HEREON ARE BASED UPON COUNTY ASSESSOR MAP INFORMATION. MONUMENTATION OF RECORD WAS NEITHER RECOVERED OR SET AS A PART OF THIS SURVEY. LOCATION OF EXISTING FEATURES RELATIVE TO PROPERTY LINES THEREFORE ARE APPROXIMATE.
2. A TITLE SEARCH WAS NOT PERFORMED FOR THIS SURVEY. THUS, EASEMENTS OF RECORD AND CHANGES IN PARCEL BOUNDARIES AS REPRESENTED ON THE COUNTY ASSESSOR MAP BEYOND THE DATE OF THIS SURVEY ARE NOT REPRESENTED HEREON.
3. UNDERGROUND UTILITY LINES WERE NOT LOCATED FOR THIS SURVEY.

BASIS OF BEARINGS (HORIZONTAL DATUM)

1. GEODETIC NORTH AS REFERENCED TO THE WORLD GEODETIC SYSTEM OF 1984 ("WGS84"), WHICH ON THIS SURVEY, FOR ALL INTENTS AND PURPOSES, IS THE SAME AS THE NORTH AMERICAN DATUM OF 1983 ("NAD83")

VERTICAL DATUM

1. THE ELEVATIONS ARE BASED ON THE NORTH AMERICAN VERTICAL DATUM OF 1988 (NAVD88)

ABBREVIATIONS

A.G.L.	ABOVE GROUND LEVEL
AMSL	ABOVE MEAN SEA LEVEL
APPRX.	APPROXIMATE(LY)
B.O.	BOTTOM
CLR.	CLEAR
CONC.	CONCRETE
D/W	DRIVEWAY
E.O.P.	EDGE OF PAVEMENT
(E)	EXISTING
F.O.C.	FACE OF CURB
GPS	GLOBAL POSITIONING SYSTEM
MIN.	MINIMUM
NO.(#)	NUMBER
N.T.S.	NOT TO SCALE
(N)	NEW
O.C.	ON CENTER
R.O.W.	RIGHT-OF-WAY
S.W.	SIDEWALK
T.O.	TOP OF
T.O.C.	TOP OF CURB
TYP	TYPICAL

LEGEND

- RIGHT OF WAY
- CENTER LINE
- O/H — OVERHEAD LINE(S)

SYMBOLS

- PULL BOX
- POLE
- W — WATER VALVE
- STREET SIGN
- MH — MANHOLE
- GUY WIRE
- FH — FIRE HYDRANT
- INLET
- STREET LIGHT POLE

AT&T
5001 EXECUTIVE PARKWAY
SAN RAMON, CA
94583

NextEdge
1355 WINDWARD CONCOURSE,
SUITES 410
ALPHARETTA, GA
30005

DRAWN BY:	JLV
CHECKED BY:	RM
APPROVED BY:	CW

REV	DATE	DESCRIPTION
	03/27/24	100% SURVEY

REGISTERED PROFESSIONAL ENGINEER
CHRISTOPHER R. WALKER
No.65117
Exp. 09/30/25
CIVIL
STATE OF CALIFORNIA

CRAN_RSFR_PEBBL_002

1063 WRANGLERS TRAIL ROAD
PEBBLE BEACH, CA 93953

SURVEY

C-1

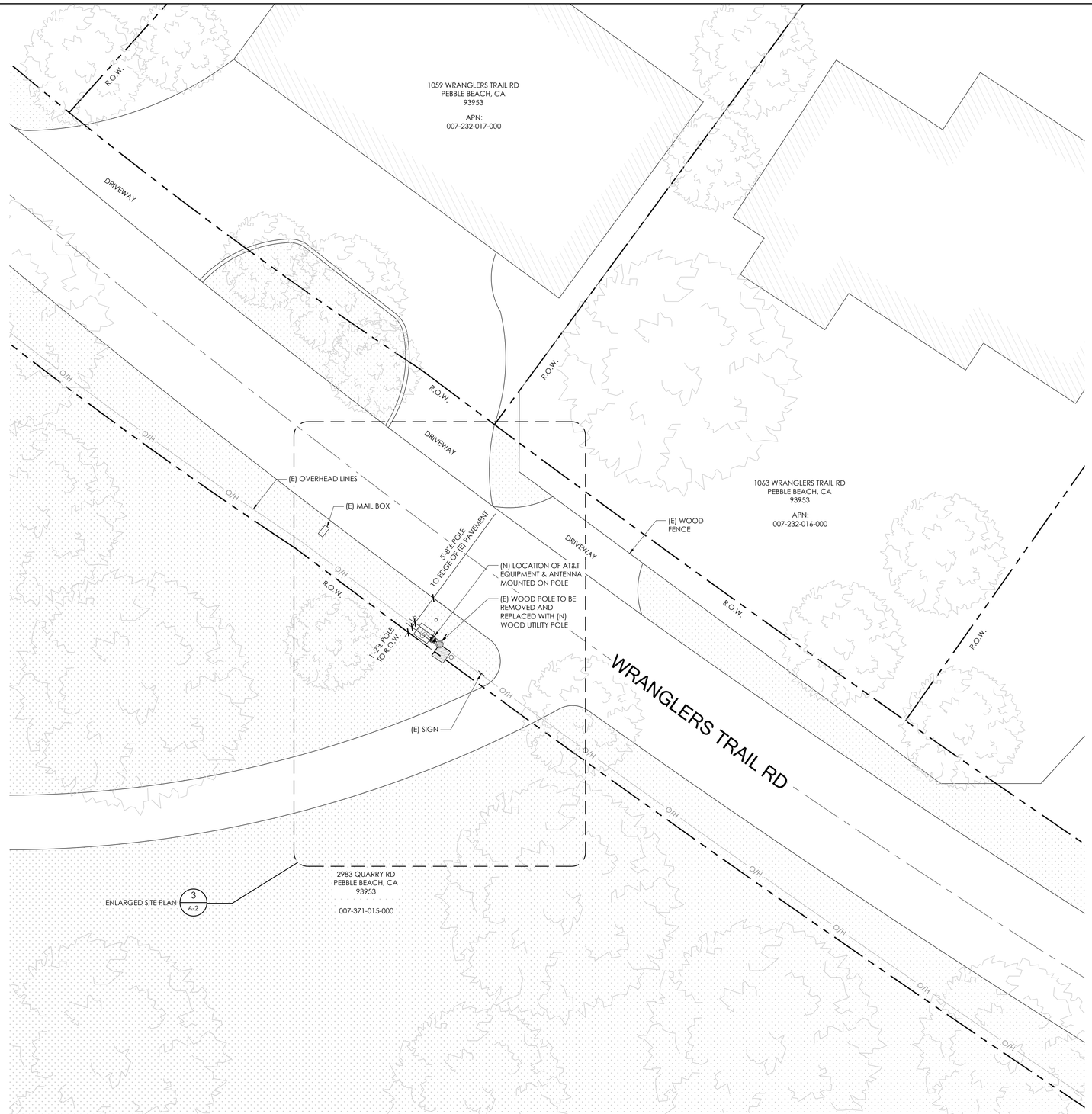

SITE PLAN

24"x36" SCALE: 1" = 10'-0"
11"x17" SCALE: 1" = 20'-0"
10' 5' 0" 10'

1

at&t

AT&T
5005 EXECUTIVE PARKWAY
SAN RAMON, CA
94583

NextEdge

1355 WINDWARD CONCOURSE,
SUITES 410
ALPHARETTA, GA
30005

DRAWN BY:	JLV
CHECKED BY:	TDL
APPROVED BY:	CW

REV	DATE	DESCRIPTION
	01/14/25	90% CD
0	01/27/25	100% CD

REGISTERED PROFESSIONAL ENGINEER
CHRISTOPHER R. WALK
No.85117
Exp. 09/30/25
CIVIL
STATE OF CALIFORNIA

IT IS A VIOLATION OF THE LAW FOR ANY PERSON, UNLESS THEY ARE ACTING UNDER THE DIRECTION OF A LICENSED PROFESSIONAL ENGINEER, TO ALTER THIS DOCUMENT

CRAN_RSFR_PEBBL_002
(NEAR) 1063 WRANGLERS
TRAIL ROAD
PEBBLE BEACH, CA 93953

SITE PLAN

A-1

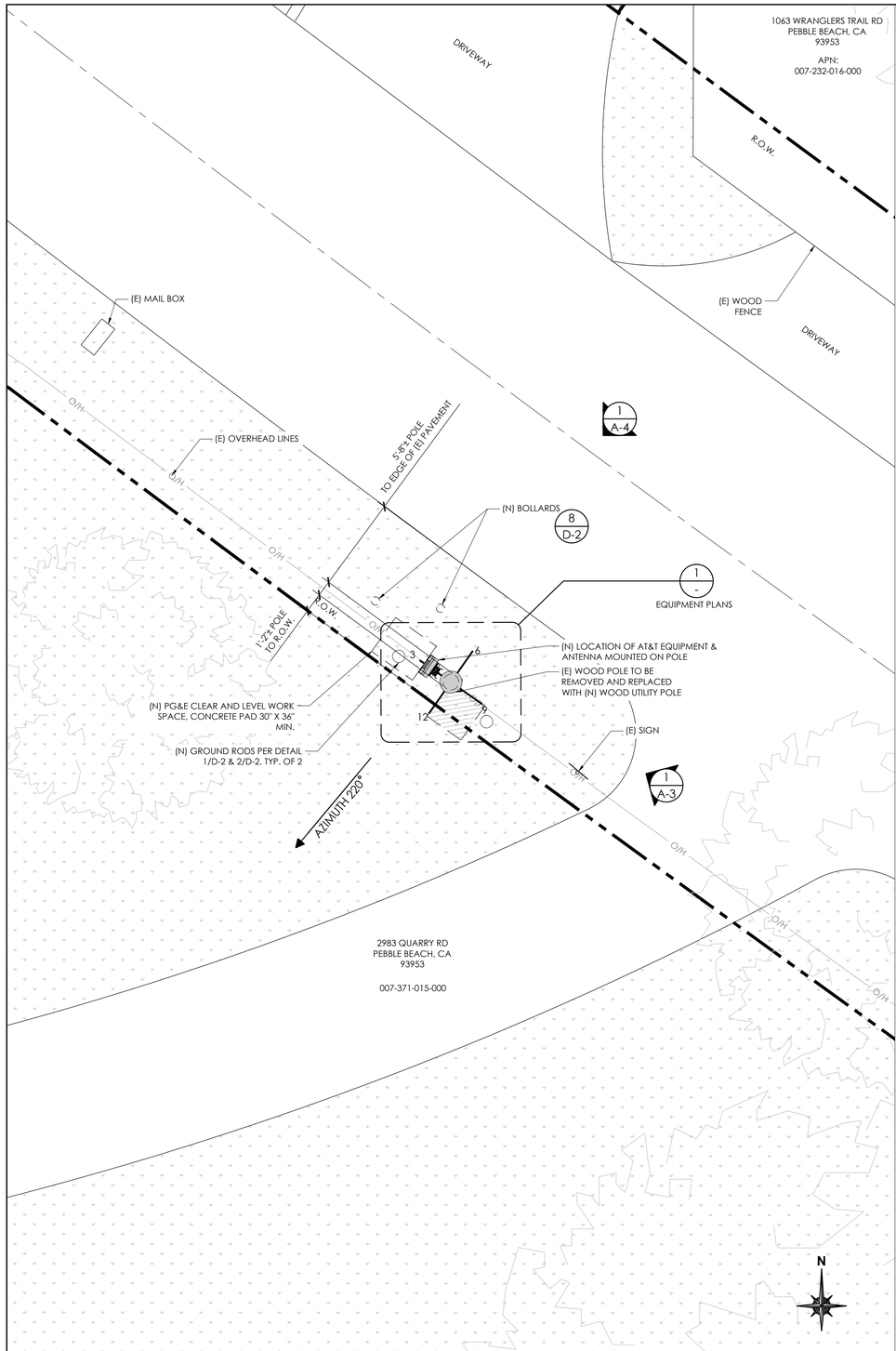

NOTES:

1. ALL EQUIPMENT SHALL BE PLACED (VERTICALLY) AS CLOSE AS ALLOWED BY POLE OWNER, WHILE MAINTAINING MINIMUM CLEARANCE REQUIREMENTS.
2. MAINTAIN 4" MIN. OFFSET BETWEEN THE MOUNTING BRACKET FLANGE AND THE POLE
3. ALL ANTENNAS, BRACKETS, CABLING, CONDUIT, AND OTHER EQUIPMENT WILL BE PAINTED NON-GLOSSY SABLE BY SHERWIN WILLIAMS (OR EQUIVALENT)
4. SWEEP CONDUIT RUNS AROUND (E) CROSS ARMS WHERE THEY OCCUR, SEE DETAIL 6/D-2
5. CABLING TO BE INSTALLED IN A TIGHT NEAT MANNER WITHOUT EXCESS CABLE LOOPS

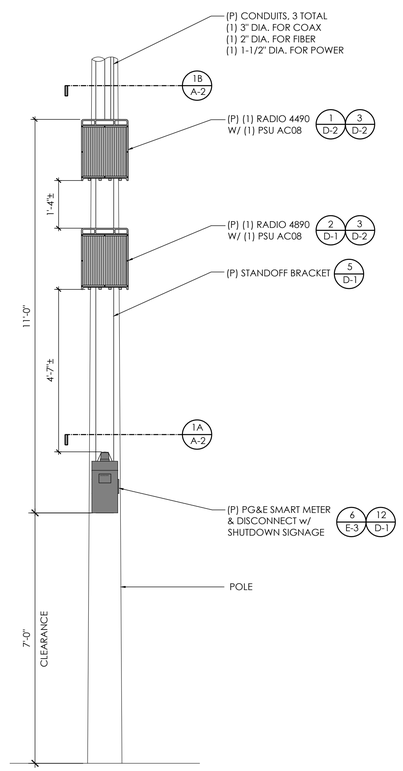

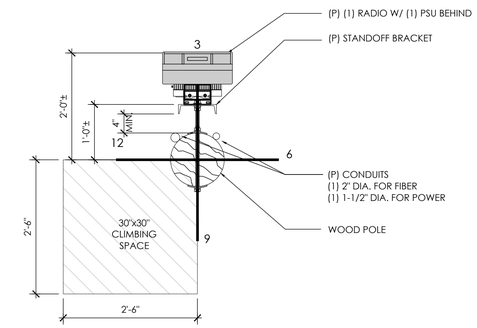

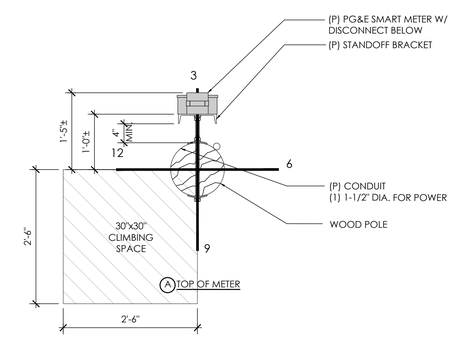

N

ENLARGED SITE PLAN — 24"x36" SCALE: 1/4" = 1'-0" 11"x17" SCALE: 1/8" = 1'-0" — 4' 3' 2' 1' 0" 4' — 3

(P) ELEVATION — 24"x36" SCALE: NTS 11"x17" SCALE: NTS — 2

(P) EQUIPMENT PLANS — 24"x36" SCALE: 3/4" = 1'-0" 11"x17" SCALE: 3/8" = 1'-0" — 1' 6" 0" 1' — 1

N

at&t

AT&T
5005 EXECUTIVE PARKWAY
SAN RAMON, CA
94583

NextEdge

1355 WINDWARD CONCOURSE,
SUITES 410
ALPHARETTA, GA
30005

DRAWN BY:	JLV
CHECKED BY:	TDL
APPROVED BY:	CW

REV	DATE	DESCRIPTION
	01/14/25	90% CD
0	01/27/25	100% CD

REGISTERED PROFESSIONAL ENGINEER
CHRISTOPHER R. WALKER
No.65117
Exp. 09/30/25
CIVIL
STATE OF CALIFORNIA

IT IS A VIOLATION OF THE LAW FOR ANY PERSON, UNLESS THEY ARE ACTING UNDER THE DIRECTION OF A LICENSED PROFESSIONAL ENGINEER, TO ALTER THIS DOCUMENT

CRAN_RSFR_PEBBL_002

(NEAR) 1063 WRANGLERS TRAIL ROAD
PEBBLE BEACH, CA 93953

ENLARGED SITE PLAN & PROPOSED ELEVATION / EQUIPMENT PLANS

A-2

NOTES:
1. ALL EQUIPMENT SHALL BE PLACED (VERTICALLY) AS CLOSE AS ALLOWED BY POLE OWNER, WHILE MAINTAINING MINIMUM CLEARANCE REQUIREMENTS.
2. MAINTAIN 12" MIN. CLEARANCE TO GUY WIRE FROM PROPOSED EQUIPMENT.
3. MAINTAIN 4" MIN. OFFSET BETWEEN THE MOUNTING BRACKET FLANGE AND THE POLE
4. ALL ANTENNAS, BRACKETS, CABLING, CONDUIT, AND OTHER EQUIPMENT WILL BE PAINTED NON-GLOSSY SABLE BY SHERWIN WILLIAMS (OR EQUIVALENT)
5. CABLING TO BE INSTALLED IN A TIGHT NEAT MANNER WITHOUT EXCESS CABLE LOOPS

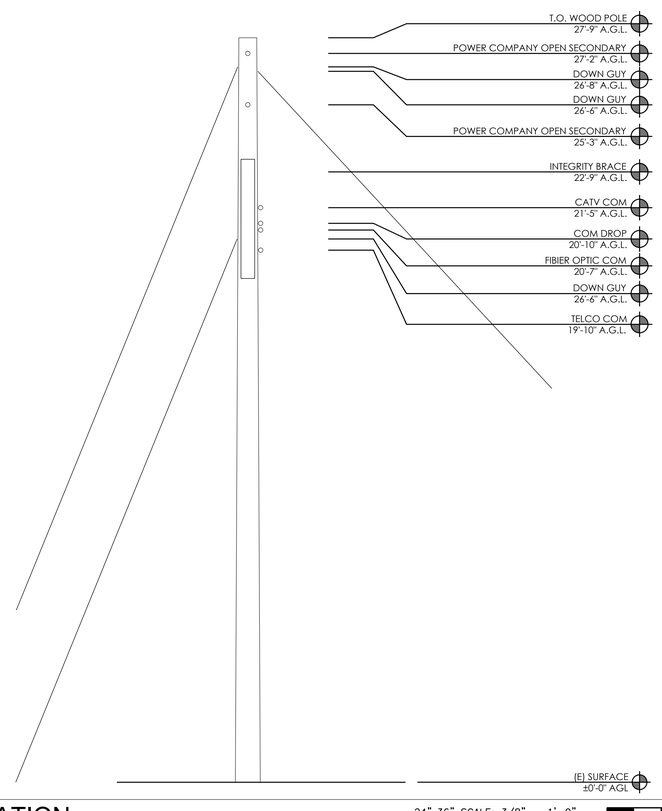

EXISTING SIDE ELEVATION

24"x36" SCALE: 3/8" = 1'-0"
11"x17" SCALE: 3/16" = 1'-0"
2' 1' 0" 2'

2

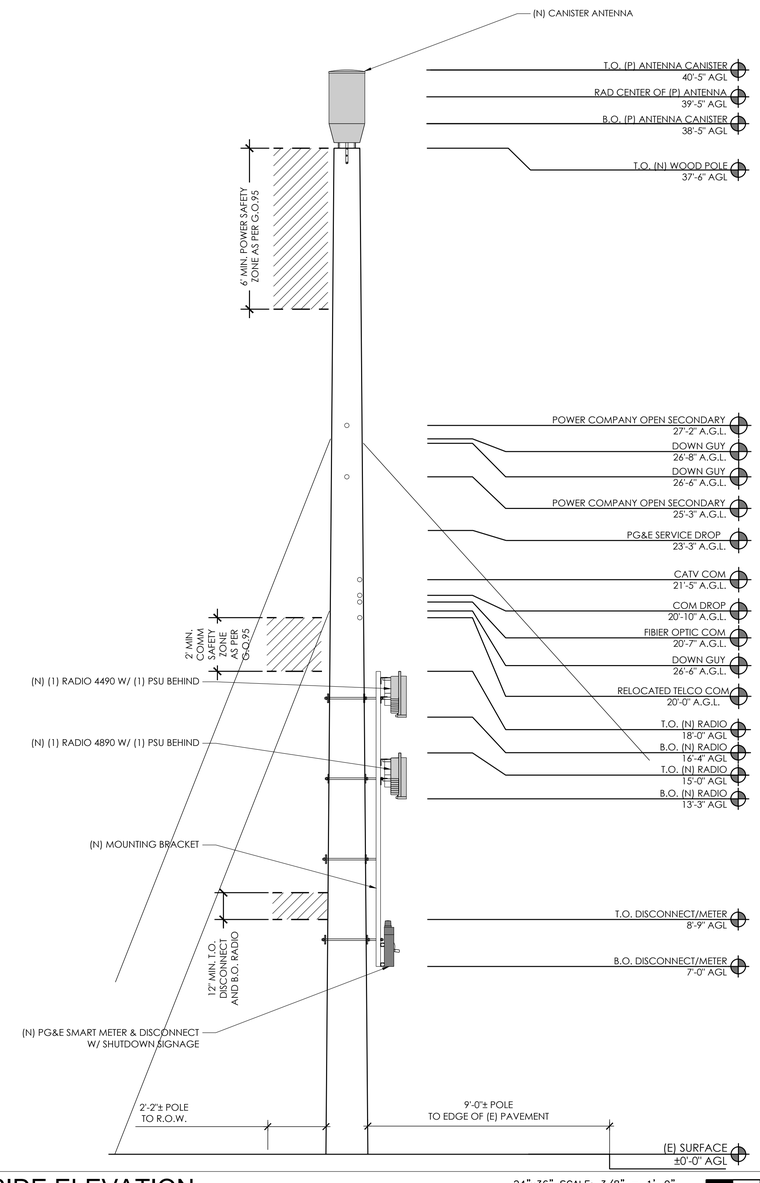

PROPOSED SIDE ELEVATION

24"x36" SCALE: 3/8" = 1'-0"
11"x17" SCALE: 3/16" = 1'-0"
2' 1' 0" 2'

1

AT&T
5005 EXECUTIVE PARKWAY
SAN RAMON, CA
94583

NextEdge
1355 WINDWARD CONCOURSE,
SUITES 410
ALPHARETTA, GA
30005

DRAWN BY:	JLV
CHECKED BY:	TDL
APPROVED BY:	CW

REV	DATE	DESCRIPTION
	01/14/25	90% CD
0	01/27/25	100% CD

REGISTERED PROFESSIONAL ENGINEER
CHRISTOPHER R. WALK
No.85117
Exp. 09/30/25
CIVIL
STATE OF CALIFORNIA

IT IS A VIOLATION OF THE LAW FOR ANY PERSON, UNLESS THEY ARE ACTING UNDER THE DIRECTION OF A LICENSED PROFESSIONAL ENGINEER, TO ALTER THIS DOCUMENT

CRAN_RSFR_PEBBL_002
(NEAR) 1063 WRANGLERS TRAIL ROAD
PEBBLE BEACH, CA 93953

ELEVATIONS

A-3

NOTES:
1. ALL EQUIPMENT SHALL BE PLACED (VERTICALLY) AS CLOSE AS ALLOWED BY POLE OWNER, WHILE MAINTAINING MINIMUM CLEARANCE REQUIREMENTS.
2. MAINTAIN 12" MIN. CLEARANCE TO GUY WIRE FROM PROPOSED EQUIPMENT.
3. MAINTAIN 4" MIN. OFFSET BETWEEN THE MOUNTING BRACKET FLANGE AND THE POLE
4. ALL ANTENNAS, BRACKETS, CABLING, CONDUIT, AND OTHER EQUIPMENT WILL BE PAINTED NON-GLOSSY SABLE BY SHERWIN WILLIAMS (OR EQUIVALENT)
5. CABLING TO BE INSTALLED IN A TIGHT NEAT MANNER WITHOUT EXCESS CABLE LOOPS

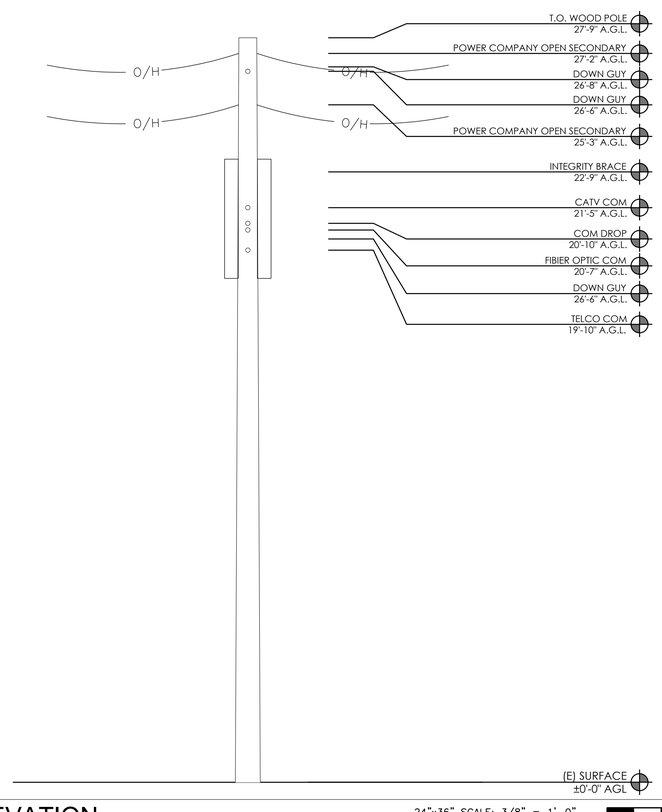

EXISTING FRONT ELEVATION

24"x36" SCALE: 3/8" = 1'-0"
11"x17" SCALE: 3/16" = 1'-0"
2' 1' 0" 2'

2

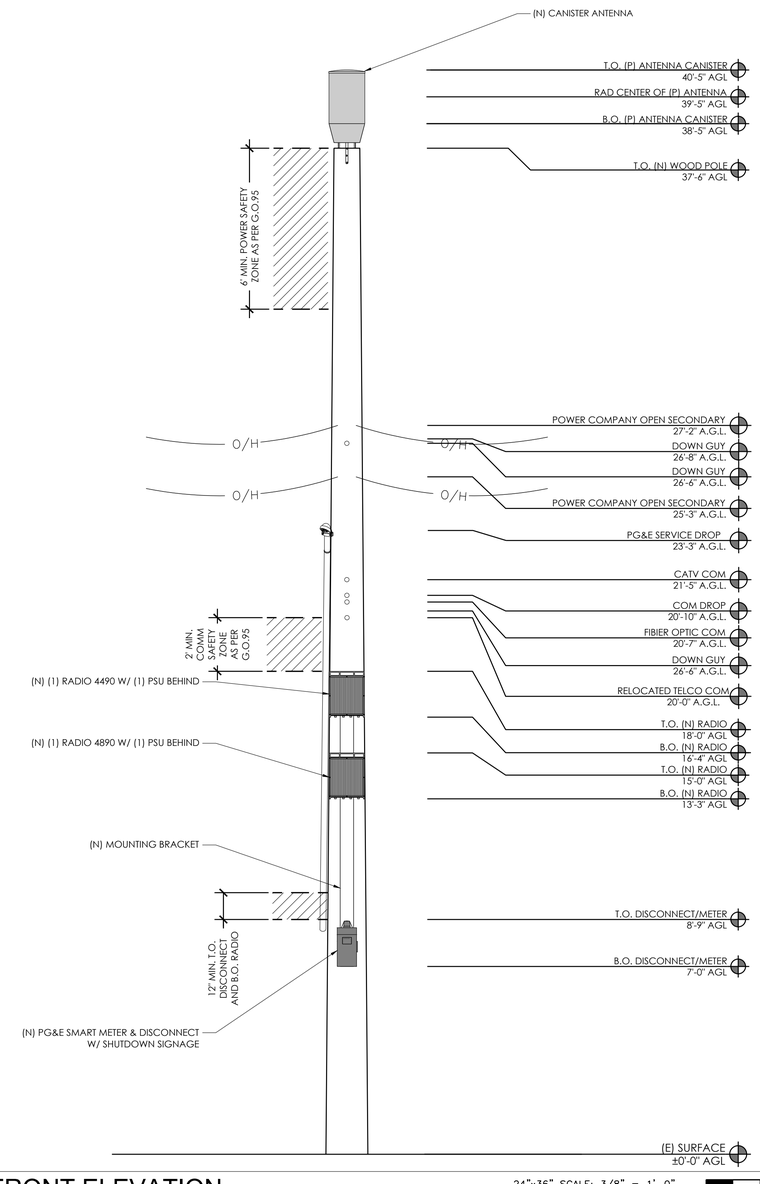

PROPOSED FRONT ELEVATION

24"x36" SCALE: 3/8" = 1'-0"
11"x17" SCALE: 3/16" = 1'-0"
2' 1' 0" 2'

1

AT&T
5005 EXECUTIVE PARKWAY
SAN RAMON, CA
94583

NextEdge
1355 WINDWARD CONCOURSE,
SUITES 410
ALPHARETTA, GA
30005

DRAWN BY:	JLV
CHECKED BY:	TDL
APPROVED BY:	CW

REV	DATE	DESCRIPTION
	01/14/25	90% CD
0	01/27/25	100% CD

REGISTERED PROFESSIONAL ENGINEER
CHRISTOPHER R. WALK
No.85117
Exp. 09/30/25
CIVIL
STATE OF CALIFORNIA

IT IS A VIOLATION OF THE LAW FOR ANY PERSON, UNLESS THEY ARE ACTING UNDER THE DIRECTION OF A LICENSED PROFESSIONAL ENGINEER, TO ALTER THIS DOCUMENT

CRAN_RSFR_PEBBL_002
(NEAR) 1063 WRANGLERS
TRAIL ROAD
PEBBLE BEACH, CA 93953

ELEVATIONS

A-4

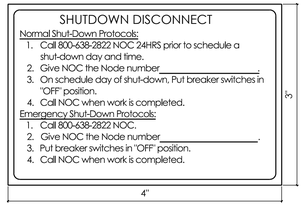

NOTES:

1. SIGN PROVIDED BY GC MOUNTED TO OUTSIDE OF DISCONNECT COVER
2. CONTRACTOR TO NOTE MARKET ID, SITE ID, SITE NAME

SHUTDOWN SIGNAGE

SCALE NTS | 12

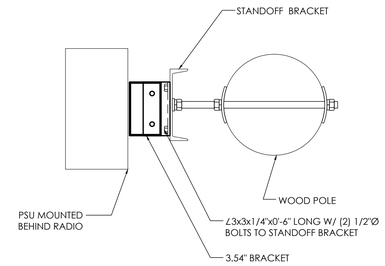

PLAN VIEW

RADIO MOUNT

SCALE NTS | 6

NOT USED

SCALE NTS | 3

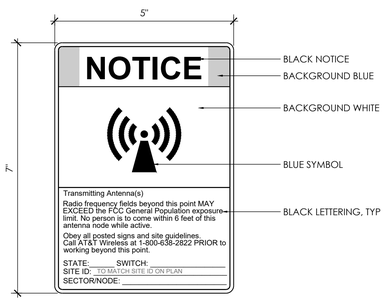

NOTES:

1. OUTDOOR RATED SELF ADHESIVE VINYL DECAL WITH UV PROTECTION.
2. POST SIGN 3'-0" BELOW PROPOSED ANTENNA.
3. CONTRACTOR TO CONFIRM SPECIFIC SIGN REQUIREMENTS WITH AT&T WIRELESS, AND PUBLIC UTILITIES COMMISSION AND AUTHORITIES HAVING JURISDICTION PRIOR TO FABRICATION.
4. DECAL SHALL FACE OUT THE STREET AND WHEN FEASIBLE AWAY FROM THE STREET, IF NO BUILDING WINDOW IS PRESENT WITHIN 25 FEET FACING THE EXISTING POLE.

RF SIGNAGE

SCALE NTS | 11

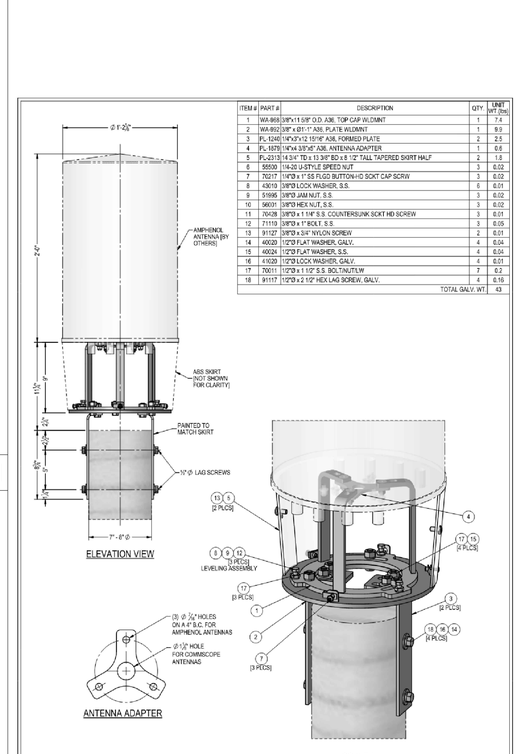

ITEM #	PART #	DESCRIPTION	QTY.	UNIT WT. (lbs)
1	WA-968	3/8"x11 5/8" O.D. A36, TOP CAP WLDMNT	1	7.4
2	WA-992	3/8" x Ø11-1" A36, PLATE WLDMNT	1	9.9
3	PL-1240	1/4"x3"x12 15/16" A36, FORMED PLATE	2	2.5
4	PL-1878	1/4"x4 3/5"x5" A36, ANTENNA ADAPTER	1	0.6
5	PL-2313	1/4 3/4" TD x 13 3/8" BD x 8 1/2" TALL TAPERED SKIRT HALF	2	1.8
6	56530	1/4-20 U-STYLE SPEED NUT	3	0.02
7	70217	1/4"Ø x 1"SS FLGD BUTTON-HD SCKT CAP SCRW	3	0.02
8	43019	3/8"Ø LOCK WASHER, S.S.	6	0.01
9	51995	3/8"Ø JAM NUT, S.S.	3	0.02
10	56031	3/8"Ø HEX NUT, S.S.	3	0.02
11	70428	3/8"Ø x 1 1/4" S.S. COUNTERSUNK SCKT HD SCREW	3	0.01
12	71119	3/8"Ø x 1" BOLT, S.S.	3	0.05
13	91127	3/8"Ø x 3/4" NYLON SCREW	2	0.01
14	40020	1/2"Ø FLAT WASHER, GALV.	4	0.04
15	40024	1/2"Ø FLAT WASHER, S.S.	4	0.04
16	41020	1/2"Ø LOCK WASHER, GALV.	4	0.01
17	70011	1/2"Ø x 1 1/2" S.S. BOLT,NUT,LW	7	0.2
18	91117	1/2"Ø x 2 1/2" HEX LAG SCREW, GALV.	4	6.16
		TOTAL GALV. WT.		43

ANTENNA BRACKET

SCALE NTS | 7

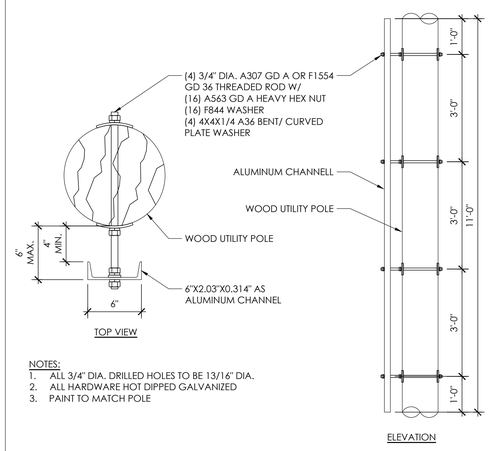

NOTES:

1. ALL 3/4" DIA. DRILLED HOLES TO BE 13/16" DIA.
2. ALL HARDWARE HOT DIPPED GALVANIZED
3. PAINT TO MATCH POLE

STANDOFF BRACKET

SCALE NTS | 5

MANUFACTURER:	ERICSSON
MODEL:	RRHS-4890 B25/B66
SIZE (H x W x D):	20.6" x 15.67" x 7.04"
WEIGHT:	67.24 LBS

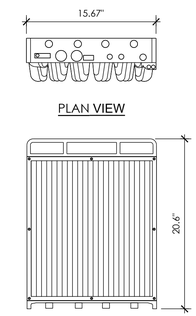

RADIO 4890

SCALE NTS | 2

NOT USED

SCALE NTS | 10

GAMMANU-DOY9X360F16T0

ANTENNA COLOR:	ASA GRAY
DIMENSIONS:	24" TALL x Ø16"
NET WEIGHT:	29.1 LBS

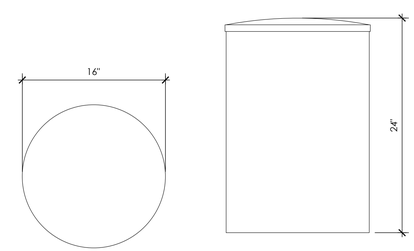

ANTENNA

SCALE NTS | 4

MANUFACTURER:	ERICSSON
MODEL:	RRHS-4490 B5/B12
SIZE (H x W x D):	20.55" x 15.63" x 7.0"
WEIGHT:	69.5 LBS

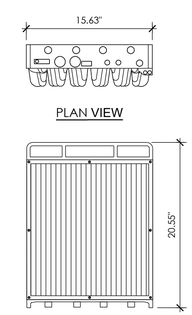

RADIO 4490

SCALE NTS | 1

AT&T
5005 EXECUTIVE PARKWAY
SAN RAMON, CA
94583

NextEdge
1355 WINDWARD CONCOURSE,
SUITES 410
ALPHARETTA, GA
30005

DRAWN BY:	JLV
CHECKED BY:	TDL
APPROVED BY:	CW

REV	DATE	DESCRIPTION
	01/14/25	90% CD
0	01/27/25	100% CD

REGISTERED PROFESSIONAL ENGINEER CHRISTOPHER R. WEBB No.65117 Exp. 09/30/25 CIVIL STATE OF CALIFORNIA

IT IS A VIOLATION OF THE LAW FOR ANY PERSON, UNLESS THEY ARE ACTING UNDER THE DIRECTION OF A LICENSED PROFESSIONAL ENGINEER, TO ALTER THIS DOCUMENT

CRAN_RSFR_PEBBL_002
(NEAR) 1063 WRANGLERS TRAIL ROAD
PEBBLE BEACH, CA 93953

DETAILS

D-1

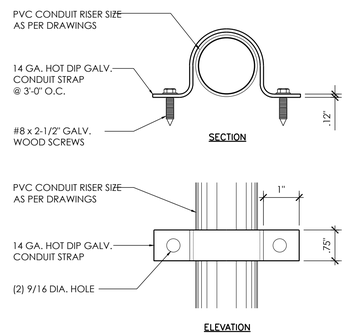

NOTE:
CONDUITS SHALL IN NO CASE, CROSS OVER INTO THE CLIMB SPACE QUADRANT, OR OTHER QUADRANTS

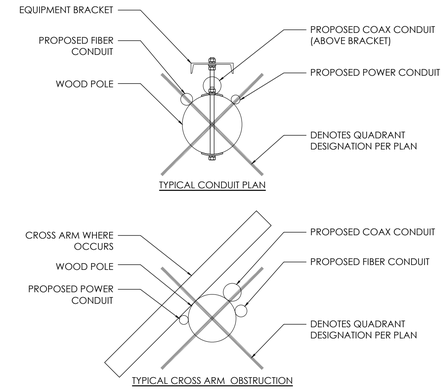

ERICSSON PSU AC 08

DIMENSIONS: 2.72" TALL x 10.79" WIDE x 7.09" DEEP

WEIGHT: 11.46 lbs

THE PSU IS REQUIRED TO OPERATE THE RADIO ON AC. IF THE RADIO IS INSTALLED OUTDOORS, THE ACCU IS ALSO REQUIRED, OTHERWISE THE ACCU IS OPTIONAL. THE EQUIPMENT FOR AC POWER SUPPLY IS SHOWN FIGURE 1

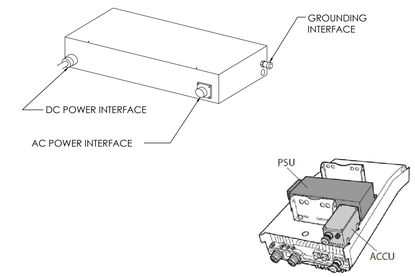

FIGURE 1

NOT USED	12	CONDUIT BRACKET	9	TYP CROSS ARM OBSTRUCTION	6	PSU	SCALE NTS	3

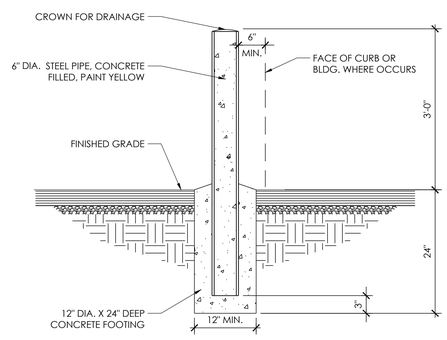

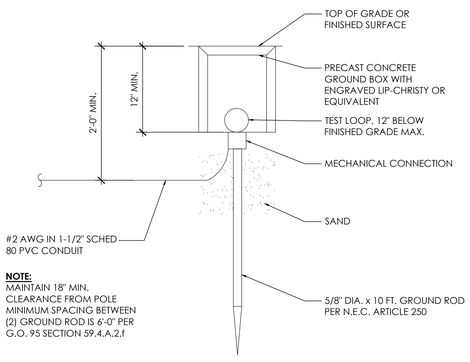

NOT USED	11	BOLLARD	8	NOT USED	5	GROUND ROD	SCALE NTS	2

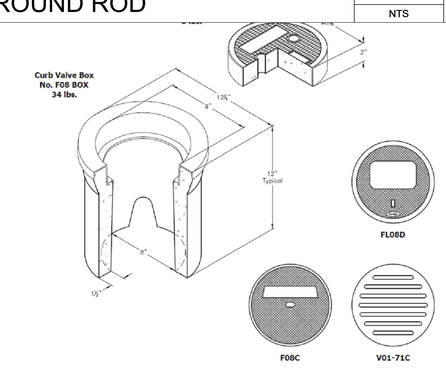

NOT USED	10	NOT USED	7	NOT USED	4	GROUND ROD ENCLOSURE	SCALE NTS	1

AT&T
5005 EXECUTIVE PARKWAY
SAN RAMON, CA
94583

NextEdge
1355 WINDWARD CONCOURSE,
SUITES 410
ALPHARETTA, GA
30005

DRAWN BY:	JLV
CHECKED BY:	TDL
APPROVED BY:	CW

REV	DATE	DESCRIPTION
	01/14/25	90% CD
0	01/27/25	100% CD

REGISTERED PROFESSIONAL ENGINEER
CHRISTOPHER R. WALK
No.65117
Exp. 09/30/25
CIVIL
STATE OF CALIFORNIA

IT IS A VIOLATION OF THE LAW FOR ANY PERSON, UNLESS THEY ARE ACTING UNDER THE DIRECTION OF A LICENSED PROFESSIONAL ENGINEER, TO ALTER THIS DOCUMENT

CRAN_RSFR_PEBBL_002
(NEAR) 1063 WRANGLERS
TRAIL ROAD
PEBBLE BEACH, CA 93953

DETAILS

D-2

ELECTRICAL NOTES

1. GENERAL REQUIREMENTS

A. ALL WORK AND MATERIALS SHALL BE IN ACCORDANCE WITH THE LATEST RULES AND REGULATIONS OF THE NATIONAL ELECTRIC CODE AND ALL STATE AND LOCAL CODES. NOTHING IN THESE PLANS OR SPECIFICATIONS SHALL BE CONSTRUED AS TO PERMIT WORK NOT CONFORMING TO THE MOST STRINGENT OF THESE CODES. SHOULD CHANGES BE NECESSARY IN THE DRAWINGS OR SPECIFICATIONS TO MAKE THE WORK COMPLY WITH THESE REQUIREMENTS, THE CONTRACTOR SHALL IMMEDIATELY NOTIFY THE ENGINEER IN WRITING AND CEASE WORK ON PARTS OF THE CONTRACT

B. THE CONTRACTOR SHALL MAKE A SITE VISIT PRIOR TO BIDDING AND CONSTRUCTION TO VERIFY ALL EXISTING CONDITIONS AND SHALL NOTIFY THE ENGINEER IMMEDIATELY UPON DISCOVERY OF ANY DISCREPANCIES. THE CONTRACTOR ASSUMES ALL LIABILITY FOR FAILURE TO COMPLY WITH THIS PROVISION.

C. THE EXTENT OF THE WORK IS INDICATED BY THE DRAWINGS, SCHEDULES, AND SPECIFICATIONS AND IS SUBJECT TO THE TERMS AND CONDITIONS OF THE CONTRACT. THE WORK SHALL CONSIST OF FURNISHING ALL LABOR, EQUIPMENT, MATERIALS AND SUPPLIES NECESSARY FOR A COMPLETE AND OPERATIONAL ELECTRICAL SYSTEM. THE WORK SHALL ALSO INCLUDE THE COMPLETION OF ALL ELECTRICAL WORK NOT MENTIONED OR SHOWN WHICH ARE NECESSARY FOR SUCCESSFUL OPERATION OF ALL SYSTEMS.

D. THE CONTRACTOR SHALL PREPARE A BID FOR A COMPLETE AND OPERATIONAL SYSTEM, WHICH INCLUDES THE COST FOR MATERIAL AND LABOR.

E. WORKMANSHIP AND NEAT APPEARANCE SHALL BE AS IMPORTANT AS THE OPERATION. DEFECTIVE OR DAMAGED MATERIALS SHALL BE REPLACED OR REPAIRED PRIOR TO FINAL ACCEPTANCE IN A MANNER ACCEPTABLE TO OWNER AND ENGINEER.

F. COMPLETE THE ENTIRE INSTALLATION AS SOON AS THE PROGRESS OF THE WORK WILL PERMIT.

G. ANY ERROR, OMISSION OR DESIGN DISCREPANCY ON THE DRAWINGS SHALL BE BROUGHT TO THE ATTENTION OF THE ENGINEER FOR CLARIFICATION OR CORRECTION BEFORE CONSTRUCTION.

H. "PROVIDE" INDICATES THAT ALL ITEMS ARE TO BE FURNISHED, INSTALLED AND CONNECTED IN PLACE.

I. CONTRACTOR SHALL SECURE ALL NECESSARY BUILDING PERMITS AND PAY ALL REQUIRED FEES.

2. EQUIPMENT LOCATION

A. ALL DRAWINGS INDICATE DIAGRAMMATICALLY THE DESIRED LOCATIONS OR ARRANGEMENTS OF CONDUIT RUNS, OUTLETS, EQUIPMENT, ETC., AND ARE TO BE FOLLOWED AS CLOSELY AS POSSIBLE. PROPER JUDGEMENT MUST BE EXERCISED IN EXECUTING THE WORK SO AS TO SECURE THE BEST POSSIBLE INSTALLATION IN THE AVAILABLE SPACE AND TO OVERCOME LOCAL DIFFICULTIES DUE TO SPACE LIMITATIONS OR INTERFERENCE OF STRUCTURE CONDITIONS ENCOUNTERED.

B. IN THE EVENT CHANGES IN THE INDICATED LOCATIONS OR ARRANGEMENTS ARE NECESSARY, DUE TO FIELD CONDITIONS IN THE BUILDING CONSTRUCTION OR REARRANGEMENT OF EQUIPMENT, SUCH CHANGES SHALL BE MADE WITHOUT COST, PROVIDING THE CHANGE IS ORDERED BEFORE THE CONDUIT RUNS, ETC., AND WORK DIRECTLY CONNECTED TO THE SAME IS INSTALLED AND NO EXTRA MATERIALS ARE REQUIRED.

C. COORDINATE THE WORK OF THE SECTION WITH THAT OF ALL OTHER TRADES. WHERE CONFLICTS OCCUR, CONSULT WITH THE PERSPECTIVE CONTRACTOR AND COME TO AGREEMENT AS TO CHANGES NECESSARY. OBTAIN WRITTEN ACCEPTANCE FROM ENGINEER FOR THE PROPOSED CHANGES BEFORE PROCEEDING.

3. TESTS

A. BEFORE FINAL ACCEPTANCE OF WORK, THE CONTRACTOR SHALL INSURE THAT ALL EQUIPMENT, SYSTEMS, FIXTURES, ETC., ARE WORKING SATISFACTORILY AND TO THE INTENT OF THE DRAWINGS.

4. PERMITS

A. THE CONTRACTOR SHALL BE RESPONSIBLE FOR TAKING OUT AND PAYING FOR ALL THE REQUIRED PERMITS, INSPECTION AND EXAMINATION WITHOUT ADDITIONAL EXPENSE TO THE OWNER.

5. GROUNDING

A. THE CONTRACTOR SHALL PROVIDE A COMPLETE, AND APPROVED GROUNDING SYSTEM INCLUDING ELECTRODES, ELECTRODE CONDUCTOR, BONDING CONDUCTORS, AND EQUIPMENT CONDUCTORS AS REQUIRED BY ARTICLE 250 OF NATIONAL ELECTRICAL CODE.

B. CONDUITS CONNECTED TO EQUIPMENT AND DEVICES SHALL BE METALLICALLY JOINED TOGETHER TO PROVIDE EFFECTIVE ELECTRICAL CONTINUITY.

C. FEEDERS AND BRANCH CIRCUIT WIRING INSTALLED IN A NONMETALLIC CONDUIT SHALL INCLUDE A CODE SIZED GROUNDING CONDUCTOR HAVING GREEN INSULATION. THE GROUND CONDUCTOR SHALL BE PROPERLY CONNECTED AT BOTH ENDS TO MAINTAIN ELECTRICAL CONTINUITY.

D. REFER TO GROUND BUS DETAILS. PROVIDE NEW GROUND SYSTEM COMPLETE WITH CONDUCTORS, GROUND ROD AND DESCRIBED TERMINATIONS.

E. ALL GROUNDING CONDUCTORS SHALL BE SOLID TINNED COPPER AND ANNEALED #2 UNLESS NOTED OTHERWISE.

F. ALL NON-DIRECT BURIED TELEPHONE EQUIPMENT GROUND CONDUCTORS SHALL BE #2 STRANDED, THHN (GREEN) INSULATION.

G. ALL GROUND CONNECTIONS SHALL BE MADE WITH "HYGROUND" COMPRESSION SYSTEM BURNDY CONNECTORS EXCEPT WHERE NOTED OTHERWISE.

H. PAINT AT ALL GROUND CONNECTIONS SHALL BE REMOVED.

I. GROUNDING SYSTEM RESISTANCE SHALL NOT EXCEED 5 OHMS. IF THE RESISTANCE VALUE IS EXCEEDED, NOTIFY THE OWNER FOR FUTURE INSTRUCTION ON METHODS FOR REDUCING THE RESISTANCE VALUE. SUBMIT TEST REPORTS AND FURNISH TO ATT ONCE COMPLETE SET OF PRINTS SHOWING "INSTALLED WORK".

6. UTILITY SERVICE

A. TELEPHONE AND ELECTRICAL METERING FACILITIES SHALL CONFORM TO THE REQUIREMENTS OF THE SERVING UTILITY COMPANIES. CONTRACTOR SHALL VERIFY SERVICE LOCATIONS AND REQUIREMENTS. SERVICE INFORMATION WILL BE FURNISHED BY THE SERVING UTILITIES.

B. CONFORM TO ALL REQUIREMENTS OF THE SERVING UTILITY COMPANIES.

7. PRODUCTS

A. ALL MATERIALS SHALL BE NEW, CONFORMING WITH THE NEC, ANSI, NEMA, AND THEY SHALL BE U.L. LISTED AND LABELED.

B. CONDUIT:

B.1. RIGID CONDUIT SHALL BE U.L. LABEL GALVANIZED ZINC COATED WITH ZINC INTERIOR AND SHALL BE USED WHEN INSTALLED IN OR UNDER CONCRETE SLABS, IN CONTACT WITH THE EARTH, UNDER PUBLIC ROADWAYS, IN MASONRY WALLS OR EXPOSED ON BUILDING EXTERIOR. RIGID CONDUIT IN CONTACT WITH EARTH SHALL BE 1/2 LAPPED WRAPPED WITH HUNTS WRAP PROCESS NO. 3.

B.2. ELECTRICAL METALLIC TUBING SHALL HAVE U.L. LABEL. FITTINGS SHALL BE COMPRESSION TYPE. EMT SHALL BE USED ONLY FOR INTERIOR RUNS.

B.3. FLEXIBLE METALLIC CONDUIT SHALL HAVE U.L. LISTED LABEL AND MAY BE USED WHERE PERMITTED BY CODE. FITTINGS SHALL BE "JAKE" OR "SQUEEZE" TYPE. SEAL TIGHT FLEXIBLE CONDUIT. ALL CONDUIT IN EXCESS OF SIX FEET IN LENGTH SHALL HAVE FULL SIZE GROUND WIRE.

B.4. ALL UNDERGROUND CONDUITS SHALL BE PVC SCHEDULE 40 (UNLESS NOTED OTHERWISE) AT A MINIMUM DEPTH OF 24" BELOW GRADE.

B.5. ALL CONDUIT ONLY (C.O.) SHALL HAVE PULL ROPE.

C. ALL WIRE AND CABLE SHALL BE COPPER, 600 VOLT, #12 AWG MINIMUM UNLESS SPECIFICALLY NOTED OTHERWISE ON THE DRAWINGS. CONDUCTORS #10 AWG AND SMALLER SHALL BE SOLID. CONDUCTORS #8 AWG AND LARGER SHALL BE STRANDED. TYPE THHN INSULATION USED UNLESS CONDUCTORS INSTALLED IN CONDUIT EXPOSED TO WEATHER, IN WHICH CASE TYPE THWN INSULATION SHALL BE USED.

D. PROVIDE GALVANIZED COATED STEEL BOXES AND ACCESSORIES SIZED PER CODE TO ACCOMMODATE ALL DEVICES AND WIRING.

E. TOGGLE SWITCHES SHALL BE 20 AMP, 120 VOLT AC, SPECIFICATION GRADE WHITE (UNLESS NOTED OTHERWISE) FINISH. MOUNT SWITCHES AT +48" ABOVE FINISHED FLOOR.

F. PANELBOARD SHALL BE DEAD FRONT SAFETY TYPE WITH ANTI-BURN SOLDERLESS COMPRESSION APPROVED FOR COPPER CONDUCTORS, COPPER BUS BARS, FULL SIZED NEUTRAL BUS, GROUND BUS AND EQUIPPED WITH QUICK-MAKE QUICK-BREAK BOLT-IN TYPE THERMAL MAGNETIC CIRCUIT BREAKERS. MOUNT TOP OF THE PANELBOARD AT 6'-3" ABOVE FINISHED FLOOR. PROVIDE TYPEWRITTEN CIRCUIT DIRECTORY.

G. ALL CIRCUIT BREAKERS, MAGNETIC STARTERS AND OTHER ELECTRICAL EQUIPMENT SHALL HAVE AN INTERRUPTING RATING NOT LESS THAN MAXIMUM SHORT CIRCUIT CURRENT TO WHICH THEY MAY BE SUBJECTED.

H. GROUND RODS SHALL BE COPPER CLAD STEEL, 5/8" ROUND AND 10' LONG. COPPERWELD OR APPROVED EQUAL.

I. CONDUIT REQUIREMENTS (TYP., U.N.O.): UNDERGROUND: PVC (SCHED 40 OR 80). INDOOR: EMT (RGS IN TRAFFIC AREAS. OUTDOOR (ABOVE GRADE): RGS.

J. PLACE "TRUE TAPE" AND PULL ROPE IN THE CONDUITS AS REQUIRED.

8. INSTALLATION

A. PROVIDE SUPPORTING DEVICES FOR ALL ELECTRICAL EQUIPMENT, FIXTURES, BOXES, PANEL, ETC., EQUIPMENT SHALL BE BRACED TO WITHSTAND HORIZONTAL FORCES IN ACCORDANCE WITH STATE AND LOCAL CODE REQUIREMENTS. PROVIDE PRIOR ALIGNMENT AND LEVELING OF ALL DEVICES AND FIXTURES.

9. PROJECT CLOSEOUT

A. UPON COMPLETION OF WORK, CONDUCT CONTINUITY, SHORT CIRCUIT, AND FALL POTENTIAL GROUNDING TESTS FOR APPROVAL. SUBMIT TEST REPORTS TO PROJECT MANAGER. CLEAN PREMISES OF ALL DEBRIS RESULTING FROM WORK AND LEAVE WORK IN A COMPLETE AND UNDAMAGED CONDITION.

B. PROVIDE PROJECT MANAGER WITH ONE SET OF COMPLETE "AS INSTALLED" DRAWINGS AT THE COMPLETION OF THE JOB, SHOWING ACTUAL DIMENSIONS, ROUTINGS AND CIRCUITS.

GENERAL ABBREVIATIONS

A	AMPERE
ACCA	ANTENNA CABLE COVER ASSEMBLY
AIC	AMPERE INTERRUPTING CAPACITY
APPROX	APPROXIMATELY
AT	AMPERE TRIP
AWG	AMERICAN WIRE GAGE
BATT	BATTERY
BD	BOARD
BR	BRANCH
BRKR	BREAKER
BTCW	BARE TINNED COPPER WIRE
C	CONDUIT
CAB	CABINET
CB	CIRCUIT BREAKER
CKT	CIRCUIT
CONT	CONTINUOUS
DEM	DEMAND
(E)	EXISTING
EGR	EMERGENCY GEN. RECEPTACLE
ELEC	ELECTRICAL
EMT	ELECTRICAL METALLIC TUBING
ENCL	ENCLOSURE
EXIST	EXISTING
FAC	FACTOR
F/A	FIRE ALARM
FLUOR	FLUORESCENT
FT	FOOT/FEET
FU	FUSE
G	GROUND
GND	GROUNDING
GPS	GLOBAL POSITIONING SYSTEM
HDBC	HARD DRAWN COPPER WIRE
HPS	HIGH PRESSURE SODIUM
LG	LENGTH
LPS	LOW PRESSURE SODIUM
MAX	MAXIMUM
MECH	MECHANICAL
MFR	MANUFACTURER
MIN	MINIMUM
MLO	MAIN LUGS ONLY
MTD	MOUNTED
MTG	MOUNTING
MTS	MANUAL TRANSFER SWITCH
N	NEUTRAL
(N)	NEW
NEMA	NATIONAL ELECTRICAL MANUFACTURERS ASSOC.
OH	OVERHEAD
P	POLE
PH	PHASE
PNLBD	PANELBOARD
PRI	PRIMARY
PWR	POWER
RCPT	RECEPTACLE
RGS	RIGID GALVANIZED STEEL
SAF	SAFETY
SDBC	SOFT DRAWN BARE COPPER
SEC	SECONDARY
S.N.	SOLID NEUTRAL
SURF	SURFACE
SW	SWITCH
TEL	TELEPHONE
TYP	TYPICAL
U/G	UNDERGROUND
U.L.	UNDERWRITER'S LABORATORY INC.
U.N.O.	UNLESS NOTED OTHERWISE
V	VOLT
VAC	VOLT ALTERNATING CURRENT
W	WATT OR WIRE
W/	WITH
W/O	WITHOUT
XFER	TRANSFER
XFMR	TRANSFORMER
XLPE	CROSS-LINK POLYETHYLENE

ELECTRICAL LEGEND

—OHT/OHP—	OVERHEAD COMM/OVERHEAD POWER
—E—	POWER RUN
—T—	TELCO RUN
—E/T—	POWER/TELCO RUN
—G—	GROUND LINE
	FUSE, SIZE AND TYPE AS INDICATED.
	LIGHTING FIXTURE
	5/8" X 10'-0" ,CU. GND ROD 24" MIN. BELOW GRADE.
	MECHANICAL CONNECTION
	CIRCUIT BREAKER

at&t

AT&T
5005 EXECUTIVE PARKWAY
SAN RAMON, CA
94583

NextEdge

1355 WINDWARD CONCOURSE,
SUITES 410
ALPHARETTA, GA
30005

DRAWN BY:	JLV
CHECKED BY:	TDL
APPROVED BY:	CW

REV	DATE	DESCRIPTION
	01/14/25	90% CD
0	01/27/25	100% CD

REGISTERED PROFESSIONAL ENGINEER
CHRISTOPHER R. WARD
No.85117
Exp. 09/30/25
CIVIL
STATE OF CALIFORNIA

IT IS A VIOLATION OF THE LAW FOR ANY PERSON, UNLESS THEY ARE ACTING UNDER THE DIRECTION OF A LICENSED PROFESSIONAL ENGINEER, TO ALTER THIS DOCUMENT

CRAN_RSFR_PEBBL_002

(NEAR) 1063 WRANGLERS TRAIL ROAD
PEBBLE BEACH, CA 93953

ELECTRICAL GENERAL NOTES

E-1

NOTES:
1. GROUND ROD: UL LISTED COPPER CLAD STEEL. MINIMUM 5/8" DIAMETER x 10'-0" LONG. ALL GROUND RODS MAY BE INSTALLED WITH INSPECTION SLEEVES. GROUND RODS SHALL BE DRIVEN TO THE DEPTH OF GROUND CONDUCTOR.

2. CELL REFERENCE GROUND BAR: POINT OF GROUND REFERENCE FOR ALL COMMUNICATIONS EQUIPMENT FRAMES. ALL BONDS ARE MADE WITH STRANDED GREEN INSULATED COPPER CONDUCTORS SIZED AS SHOWN. BOND TO GROUND ROD AS SHOWN IN THE GROUNDING SCHEMATIC.

3. EXTERIOR UNIT BONDS: METALLIC OBJECTS SHALL BE BONDED TO THE EXTERIOR GROUND ROD.

4. PROVIDE ALL ELECTRICAL WORK & MATERIALS AS SHOWN ON THE DWGS, AS CALLED FOR HEREIN, & AS IS NECESSARY TO FURNISH A COMPLETE INSTALLATION.

5. OUTDOOR EQUIPMENT SHALL BE RATED NEMA 3R AND/OR UL LISTED FOR WET ENVIRONMENT.

6. THE CONTRACTOR SHALL BE RESPONSIBLE FOR TESTING THE GROUNDING SYSTEM AND ENSURING A 5 OHM OR LESS GROUNDING PATH. ADDITIONAL GROUND RODS AND/OR CHEMICAL ROD SYSTEM SHALL BE USED TO ACHIEVE THIS REQUIREMENT IF THE GIVEN DESIGN CANNOT BE MADE TO ACHIEVE THIS REQUIREMENT.

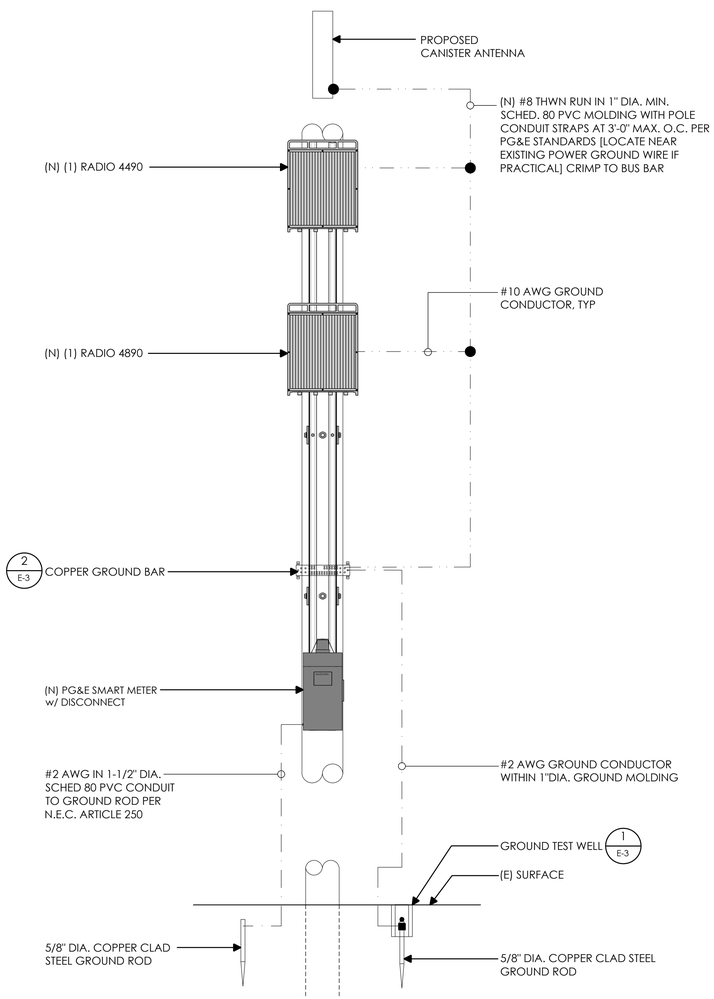

GROUNDING SCHEMATIC 2

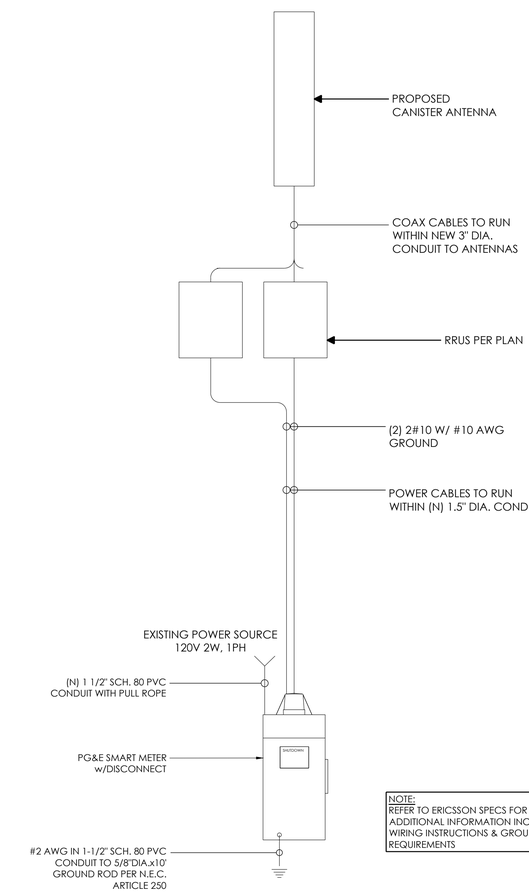

NOTE:
REFER TO ERICSSON SPECS FOR ADDITIONAL INFORMATION INCLUDING WIRING INSTRUCTIONS & GROUNDING REQUIREMENTS

ONE-LINE DIAGRAM 1

AT&T
5005 EXECUTIVE PARKWAY
SAN RAMON, CA
94583

NextEdge
1355 WINDWARD CONCOURSE,
SUITES 410
ALPHARETTA, GA
30005

DRAWN BY:	JLV
CHECKED BY:	TDL
APPROVED BY:	CW

REV	DATE	DESCRIPTION
	01/14/25	90% CD
0	01/27/25	100% CD

REGISTERED PROFESSIONAL ENGINEER
CHRISTOPHER R. WALKER
No.65117
Exp. 09/30/25
CIVIL
STATE OF CALIFORNIA

IT IS A VIOLATION OF THE LAW FOR ANY PERSON, UNLESS THEY ARE ACTING UNDER THE DIRECTION OF A LICENSED PROFESSIONAL ENGINEER, TO ALTER THIS DOCUMENT

CRAN_RSFR_PEBBL_002
(NEAR) 1063 WRANGLERS TRAIL ROAD
PEBBLE BEACH, CA 93953

ONE-LINE DIAGRAM & GROUNDING SCHEMATIC

E-2

NOT USED | 12

WEATHERHEAD | 9

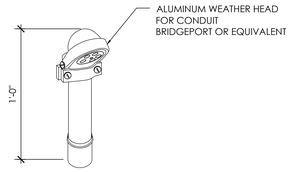

DISCONNECT | 6

TESCO DISCONNECT BOX WITH CT AND METER SOCKET

COLOR:	GRAY
DIMENSIONS:	20.5" TALL x 8.69" WIDE x 4.38" DEEP
TOTAL WEIGHT:	
PHASE.:	SINGLE
VOLTAGE:	120 OR 240
AMPACITY:	68 MAX

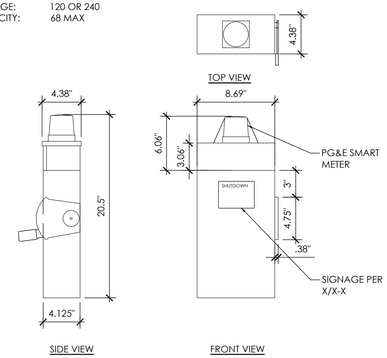

GROUND WIRE TO BAR | 3

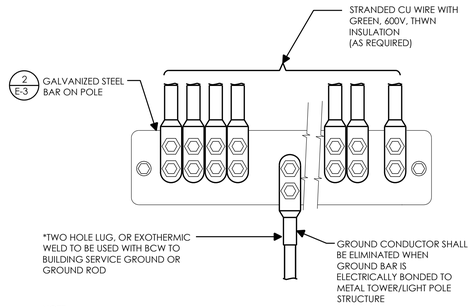

NOTE:
GROUND BARS AT BOTTOM OF TOWERS/LIGHT POLES SHALL ONLY USE EXOTHERMIC WELDS.

NOT USED | 11

NOT USED | 8

EXOTHERMIC WELD CONNECTION | 5

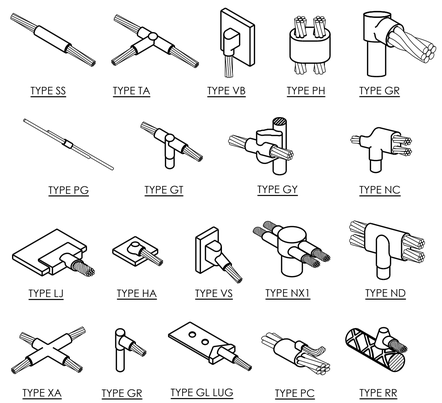

GROUND BAR | 2

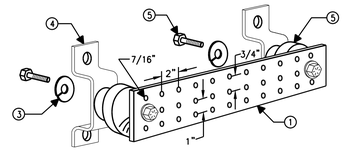

NOTES:

1. COPPER GROUND BAR, HOLE CENTERS TO MATCH NEMA DOUBLE LUG CONFIGURATION. (ACTUAL GROUND BAR SIZE WILL VARY BASED ON NUMBER OF GROUND CONNECTIONS)
2. INSULATORS, NEWTON INSTRUMENT CAT. NO. 3061-4 OR APPROVED EQUAL
3. 5/8" LOCK WASHERS, NEWTON INSTRUMENT CO., CAT. NO. 3015-8 OR APPROVED EQUAL
4. WALL MOUNTING BRACKET, NEWTON INSTRUMENT CO., CAT NO. A-6056 OR APPROVED EQUAL
5. 5/8-11 X 1" HHCS BOLTS, NEWTON INSTRUMENT CO., CAT NO. 3012-1 OR APPROVED EQUAL
6. INSULATORS SHALL BE ELIMINATED WHEN BONDING DIRECTLY TO TOWER/MONOPINE STRUCTURE. CONNECTION TO TOWER/MONOPINE STRUCTURE SHALL BE PER MANUFACTURERS RECOMMENDATIONS.
7. VALMONT TINMG212U-K (OR EQUIVALENT) 1/4"X2"X12"

NOT USED | 10

ELECTRICAL LOAD CALCULATIONS | 7

Electrical Load Calculations @ 120V

Radio	Wattage	1.25*VA	Amps
4490	480	600.0	5.0
4890	480	600.0	5.0
		0.0	0.0
		0.0	0.0
		0.0	0.0
Totals		1200.0	10.0
Disconnect / Meter: 68 Amps			
Total Load: 14.7%			

MECHANICAL CONNECTION | 4

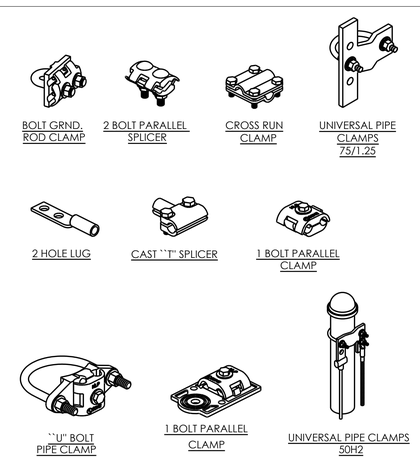

GROUND TEST WELL | 1

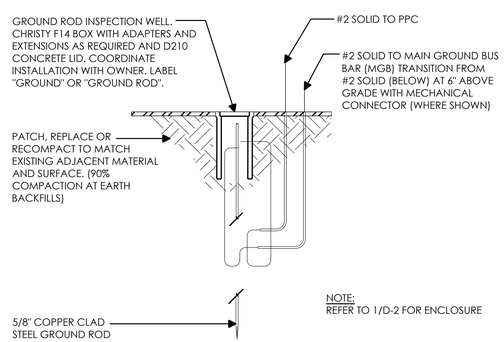

NOTE:
REFER TO 1/D-2 FOR ENCLOSURE

AT&T
5005 EXECUTIVE PARKWAY
SAN RAMON, CA
94583

NextEdge
1355 WINDWARD CONCOURSE,
SUITES 410
ALPHARETTA, GA
30005

DRAWN BY:	JLV
CHECKED BY:	TDL
APPROVED BY:	CW

REV	DATE	DESCRIPTION
	01/14/25	90% CD
0	01/27/25	100% CD

REGISTERED PROFESSIONAL ENGINEER
CHRISTOPHER R. WALK
No.65117
Exp. 09/30/25
CIVIL
STATE OF CALIFORNIA

IT IS A VIOLATION OF THE LAW FOR ANY PERSON, UNLESS THEY ARE ACTING UNDER THE DIRECTION OF A LICENSED PROFESSIONAL ENGINEER, TO ALTER THIS DOCUMENT

CRAN_RSFR_PEBBL_002
(NEAR) 1063 WRANGLERS
TRAIL ROAD
PEBBLE BEACH, CA 93953

ELECTRICAL DETAILS

E-3

Figure 6H-3. Work on the Shoulders (TA-3)

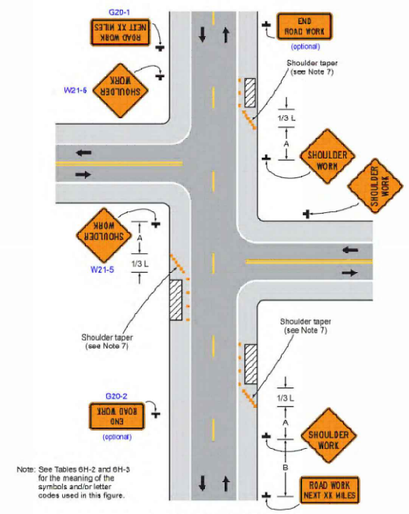

Note: See Tables 6H-2 and 6H-3 for the meaning of the symbols and/or letter codes used in this figure.

Typical Application 3

TA-3 FOR REFERENCE ONLY

PEDESTRIANS SHALL BE ESCORTED THROUGH OR AROUND THE WORK AREA, PER CAMUTCD TA-28 OR TA-29 AS APPLICABLE, THROUGHOUT THE COURSE OF WORK.

SJ MUTCD TABLE					
POSTED SPEED (MPH)	DISTANCE BETWEEN SIGNS			TAPER	BUFFER
	A	B	C	L (SEE NOTE)	
15	200'	200'	200'	45'	55'
20	200'	200'	200'	80'	55'
25	200'	200'	200'	125'	55'
30	350'	350'	350'	180'	85'
35	350'	350'	350'	245'	120'
40	350'	350'	350'	320'	220'
45	350'	350'	350'	540'	360'
50	500'	500'	500'	600'	425'
55	500'	500'	500'	660'	495'
60	500'	500'	500'	720'	570'
65	500'	500'	500'	780'	645'

NOTES:
A. DISTANCE IN FEET UNLESS OTHERWISE NOTED.
B. CONTRACTOR TO VERIFY EXISTING SPEED LIMIT.
C. DISTANCE SHOWN ARE NOT VALID FOR LIMITED ACCESS HIGHWAYS. CONSULT STATE DOT MANUAL FOR DISTANCES.
D. ADJUST DISTANCES TO COMPLY WITH REQUIREMENT OF THE STATE OR LOCAL HIGHWAY AUTHORITY HAVING JURISDICTION.
E. TAPER LENGTHS SHOWN ON 12' LANE WIDTH.

TRAFFIC CONTROL TABLE | 2

SPEED LIMIT = 25 MPH

TRAFFIC CONTROL NOTES

1. ALL DELINEATORS SHALL BE EQUIPPED WITH REFLECTORS AT NIGHT TIME.

2. ALL TRAFFIC CONTROL DEVICES, STRIPES, MARKINGS, LEGENDS AND RAISED PAVEMENT MARKERS SHALL CONFORM TO THE LATEST EDITIONS OF THE FOLLOWING: A) CA MUTCD, B) STATE OF CALIFORNIA STANDARD SPECIFICATIONS, C) SPECIAL PROVISIONS, AND D) STANDARD PLANS.

3. THE CONTRACTOR PERFORMING THE WORK ON A PUBLIC STREET SHALL ASSUME RESPONSIBILITY AS FOLLOWS: A) INSTALL AND MAINTAIN THE TRAFFIC CONTROL DEVICES AS SHOWN HEREIN, B) ANY ADDITIONAL TRAFFIC CONTROL DEVICES THAT MAY BE REQUIRED TO INSURE THE SAFE MOVEMENT OF TRAFFIC AND PEDESTRIANS THROUGH OR AROUND THE WORK AREA, AND C) PROVIDE MAXIMUM PROTECTION AND SAFETY TO CONSTRUCTION WORKERS.

4. THE CITY OR COUNTY OF RECORD AS WELL AS CALTRANS RESERVE THE RIGHT TO OBSERVE THESE TRAFFIC CONTROL PLANS IN USE. THEY HAVE THE AUTHORITY TO MAKE ANY NECESSARY CHANGES AS FIELD CONDITIONS WARRANT. ANY CHANGES SHALL SUPERSEDE THESE PLANS. THE EXACT LOCATION OF ALL EQUIPMENT AND TRAFFIC CONTROL DEVICES SHALL BE DETERMINED BY THE ENGINEER.

5. ALL SIGNS, DELINEATORS, BARRICADES, ETC. AND THEIR INSTALLATION SHALL CONFORM TO THE LATEST EDITIONS OF THE: A) CA. MANUAL OF UNIFORM TRAFFIC CONTROL DEVICES, B) THE STATE OF CALIFORNIA STANDARD SPECIFICATIONS, C) SPECIAL PROVISIONS, AND D) STANDARD PLANS.

6. IN ORDER TO PRESERVE THEIR APPEARANCE AND CONTINUITY, ALL TRAFFIC CONTROL DEVICES SHALL BE KEPT IN THEIR PROPER POSITION AT ALL TIMES AND SHALL BE REPAIRED, REPLACED OR CLEANED AS NECESSARY, AND AS DIRECTED BY THE ENGINEER

7. ALL TRAFFIC LANES SHALL HAVE A MINIMUM OF 5 FEET CLEARANCE FROM OPEN EXCAVATIONS AND MINIMUM OF 2 FEET FROM VERTICAL OBSTRUCTIONS.

8. THE CONTRACTOR SHALL PROVIDE FLAGGERS AS DEEMED NECESSARY BY THE ENGINEER, COUNTY INSPECTOR, OR CALTRANS PERMIT INSPECTOR.

9. ALL ADVANCED WARNING SIGNS SHALL BE EQUIPPED WITH FLAGS.

10. ALL TRAFFIC CONTROL DEVICES SHALL BE IN PLACE AT ALL TIMES DURING ANY WORK ON SITE.

11. PLACE ADDITIONAL SIGNS AS FOLLOWS: A) "LANE CLOSED", (C30) ON THE TYPE II BARRICADES AT 100 FOOT INTERVALS THROUGHOUT EXTENDED WORK AREAS IN EACH LANE THAT IS CLOSED AND B) "OPEN TRENCH" (C27) WHENEVER AN OPEN EXCAVATION AREA EXISTS ADJACENT TO THE TRAVELED WAY.

12. ALL TEMPORARY TRAFFIC CONTROL DEVICES SHALL BE REMOVED FOLLOWING COMPLETION OF EACH CONSTRUCTION STAGE AND THE PERMANENT TRAFFIC CONTROL DEVICES SHALL BE RESTORED BY THE CONTRACTOR UPON COMPLETION OF WORK.

13. THE CONTRACTOR SHALL REPLACE AND/OR REPAIR ALL DAMAGED STRIPING AT THE END OF EACH WORKING DAY.

14. THE CONTRACTOR SHALL COMPLY WITH THE REQUIREMENTS OF THE AMERICAN DISABILITY ACT AS RELATED TO PEDESTRIAN ACCESS AND SHALL MAINTAIN PEDESTRIAN ACCESS AT ALL TIMES PER ADA REQUIREMENTS. ANY SIDEWALK CLOSURE AND/OR DETOUR SHALL COMPLY WITH THE WATCH STANDARDS AND MUST OBTAIN APPROVAL FROM THE CITY OR COUNTY OF RECORD.

15. THE CONTRACTOR SHALL COVER OR REMOVE ALL CONFLICTING SIGNS.

16. THE CONTRACTOR SHALL POST "SYMBOLS" UNEVEN LANES, "STEEL PLATES AHEAD" OR "BUMP" SIGNS FOR PAVEMENT SURFACE DISRUPTIONS OF $\frac{1}{2}$" OR GREATER. PAVEMENT DISRUPTIONS FOR 1" OR GREATER SHALL HAVE A BEVELED EDGE OF FOUR (4) HORIZONTAL TO ONE (1) VERTICAL.

17. BEFORE PLATE BRIDGING, THE CONTRACTOR SHALL INSTALL "CAUTION STEEL PLATES ADHEAD" AND/OR "ROUGH ROAD SIGNS.

18. THE RESIDENTS AND BUSINESSES SHALL BE NOTIFIED OF THE DATES & TIMES OF CONSTRUCTION TWO (2) WEEKS PRIOR TO THE WORK START DATE.

TRAFFIC SYMBOL LEGEND

- TRAFFIC CONE (10' MAX SPACING)
- TRAFFIC SIGN
- LANE DIRECTION
- STAGING AREA
- FLAGGER

N

TRAFFIC CONTROL PLAN

24"x36" SCALE: 1" = 50'-0"
11"x17" SCALE: 1" = 100'-0"
50' 25' 0' 50'

SCALE 1"=50'-0" | 1

AT&T
5001 EXECUTIVE PARKWAY
SAN RAMON, CA
94583

PlannENG
4746 Clayton Rd,
Concord, CA, 94521
☎ (925) 408-2159
e-✉ splanneng@gmail.com
www.planneng.com

DRAWN BY:
CHECKED BY:
APPROVED BY:

REV	DATE	DESCRIPTION
0	14/04/23	100% CD

LICENSED PROFESSIONAL ENGINEER
MANOUCHEHR HAKHAMANESHI
C 88083
EXP: 03/31/2026
CIVIL
STATE OF CALIFORNIA

CRAN_RSFR_PEBBL_002

1063 WRANGLERS TRAIL ROAD
PEBBLE BEACH, CA 93953

TRAFFIC CONTROL PLAN

TCP-1

PlannENG
4746 Clayton Rd,
Concord, CA, 94521
☎ (925) 408-2159
e-✉ splanneng@gmail.com
www.planneng.com

Date:	
Scale:	SEE DRAWING
Designed:	TDL
Drawn:	BBB
Checked:	
Proj. Engr:	
File:	

◇	REVISIONS	DESIGN BY	DESIGN DATE	CITY APPR.	APPR. DATE

PLAN
FOR THE IMPROVEMENT OF

CRAN_RSFR_PEBBL_002

1063 WRANGLERS TRAIL ROAD
PEBBLE BEACH, CA 93953

PEBBLE BEACH CALIFORNIA

PERMIT #
PROJECT #
PROJECT INSPECTOR:
VOICE MAIL:

PROJECT ENGINEER		DEPARTMENT OF TRANSPORTATION - OPS	
NAME	DATE	N/A NAME	DATE
DEPARTMENT OF TRANSPORTATION		STREETLIGHT LAYOUT	
N/A NAME	DATE	N/A NAME	DATE
MUNICIPAL WATER		ELECTRICAL CIRCUITS	
N/A NAME	DATE	MARLON DE LEON	DATE

DEPARTMENT OF PUBLIC WORKS
PEBBLE BEACH, CALIFORNIA

PEBBLE BEACH GOLF LINKS

APPROVED BY MATTHEW CANO
DIRECTOR OF PUBLIC WORKS
N/A

REV. DATE MAY 08, 2018

view from Wranglers Trai lRoad looking south at site

AT&T Wireless

CRAN_RSFR_PEBBL_002
1063 Wranglers Trail Road, Pebble Beach, CA
Photosims Produced on 4-11-2025

Existing

Proposed

AdvanceSim
Photo Simulation Solutions
Contact (925) 202-8507

view from Wranglers Trai lRoad looking vwest at site

AT&T Wireless

CRAN_RSFR_PEBBL_002
1063 Wranglers Trail Road, Pebble Beach, CA
Photosims Produced on 4-11-2025

Existing

Proposed

AdvanceSim
Photo Simulation Solutions
Contact (925) 202-8507

CRAN_RSFR_PEBBL_002
SERVICE MAP

"AT&T PROPRIETARY -- THIS INFORMATION CONSTITUTES CONFIDENTIAL TRADE SECRETS AND COMMERCIAL OR FINANCIAL INFORMATION OWNED BY AT&T AND IS SHARED FOR CRITICAL INFRASTRUCTURE PROTECTION PURPOSES ONLY. IT IS EXEMPT FROM DISCLOSURE UNDER THE FREEDOM OF INFORMATION ACT (5 U.S.C. 552), EXEMPTIONS (B)(3)&(4), AND ITS DISCLOSURE IS PROHIBITED UNDER THE TRADE SECRETS ACT (18 U.S.C. 1905), THE CRITICAL INFRASTRUCTURE INFORMATION ACT OF 2002, 6 U.S.C. § 133, AND ANY STATE OR LOCAL LAW REQUIRING DISCLOSURE OF INFORMATION OR RECORDS. THIS INFORMATION MUST NOT BE COPIED OR DISTRIBUTED TO OTHERS NOT AGREED UPON BY AT&T, BUT IN ALL EVENTS DO NOT COPY OR DISTRIBUTE TO SUCH OTHERS WITHOUT NOTIFICATION PURSUANT TO EXECUTIVE ORDER 12600."

EXISTING LTE 700 COVERAGE PLOT

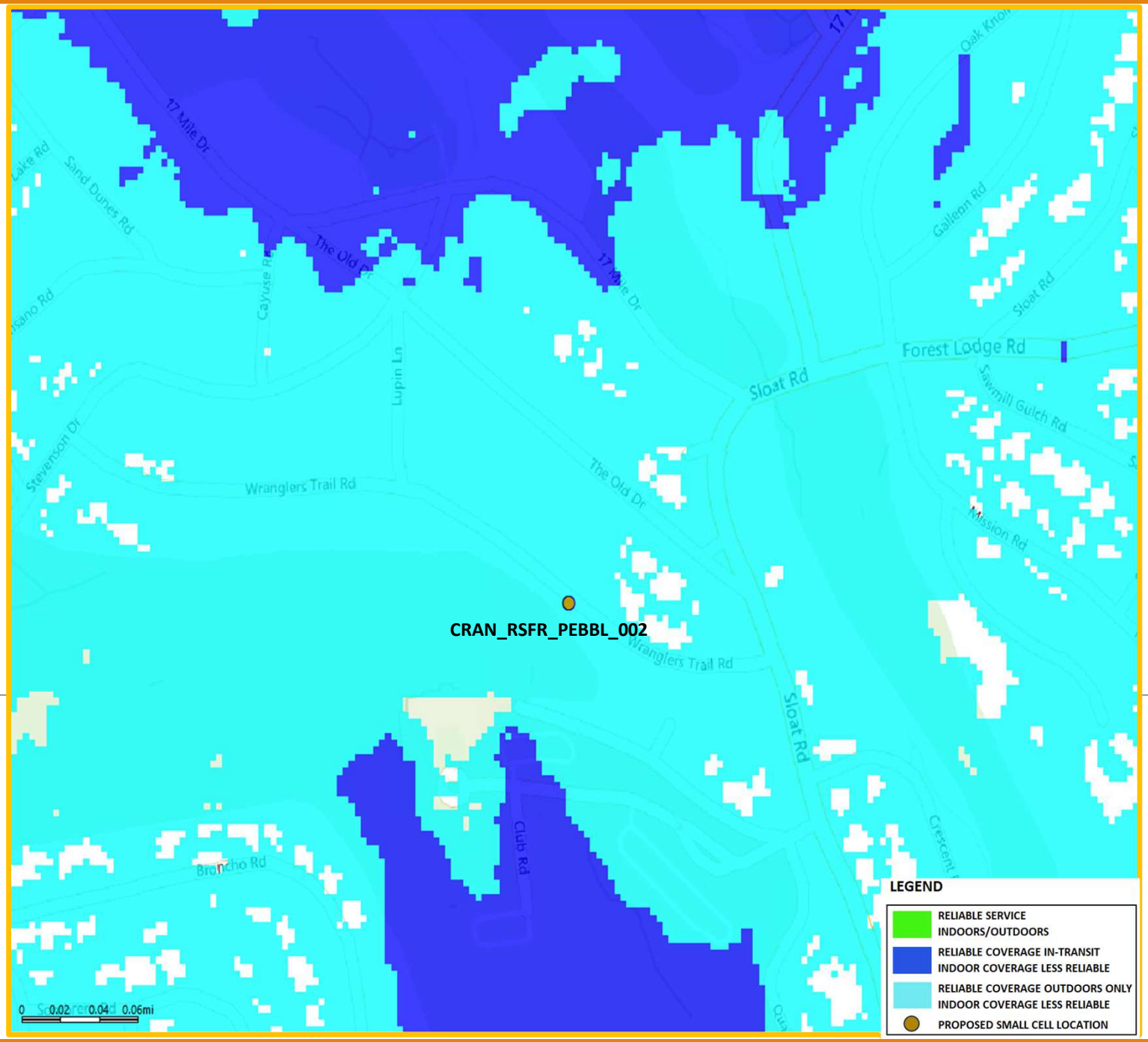

"AT&T PROPRIETARY -- THIS INFORMATION CONSTITUTES CONFIDENTIAL TRADE SECRETS AND COMMERCIAL OR FINANCIAL INFORMATION OWNED BY AT&T AND IS SHARED FOR CRITICAL INFRASTRUCTURE PROTECTION PURPOSES ONLY. IT IS EXEMPT FROM DISCLOSURE UNDER THE FREEDOM OF INFORMATION ACT (5 U.S.C. 552), EXEMPTIONS (B)(3)&(4), AND ITS DISCLOSURE IS PROHIBITED UNDER THE TRADE SECRETS ACT (18 U.S.C. 1905), THE CRITICAL INFRASTRUCTURE INFORMATION ACT OF 2002, 6 U.S.C. § 133, AND ANY STATE OR LOCAL LAW REQUIRING DISCLOSURE OF INFORMATION OR RECORDS. THIS INFORMATION MUST NOT BE COPIED OR DISTRIBUTED TO OTHERS NOT AGREED UPON BY AT&T, BUT IN ALL EVENTS DO NOT COPY OR DISTRIBUTE TO SUCH OTHERS WITHOUT NOTIFICATION PURSUANT TO EXECUTIVE ORDER 12600."

PROPOSED LTE 700 COVERAGE PLOT

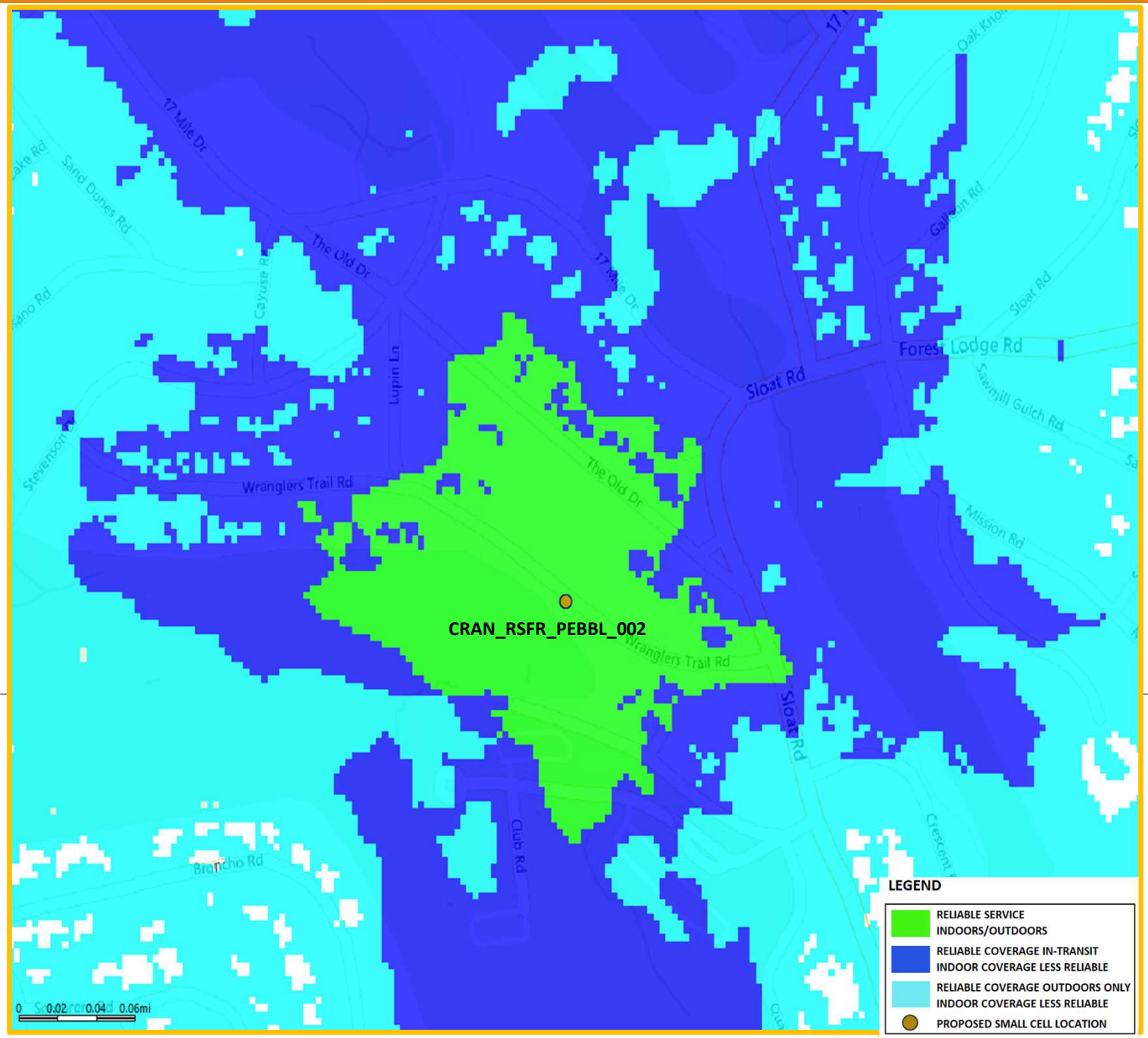

"AT&T PROPRIETARY -- THIS INFORMATION CONSTITUTES CONFIDENTIAL TRADE SECRETS AND COMMERCIAL OR FINANCIAL INFORMATION OWNED BY AT&T AND IS SHARED FOR CRITICAL INFRASTRUCTURE PROTECTION PURPOSES ONLY. IT IS EXEMPT FROM DISCLOSURE UNDER THE FREEDOM OF INFORMATION ACT (5 U.S.C. 552), EXEMPTIONS (B)(3)&(4), AND ITS DISCLOSURE IS PROHIBITED UNDER THE TRADE SECRETS ACT (18 U.S.C. 1905), THE CRITICAL INFRASTRUCTURE INFORMATION ACT OF 2002, 6 U.S.C. § 133, AND ANY STATE OR LOCAL LAW REQUIRING DISCLOSURE OF INFORMATION OR RECORDS. THIS INFORMATION MUST NOT BE COPIED OR DISTRIBUTED TO OTHERS NOT AGREED UPON BY AT&T, BUT IN ALL EVENTS DO NOT COPY OR DISTRIBUTE TO SUCH OTHERS WITHOUT NOTIFICATION PURSUANT TO EXECUTIVE ORDER 12600."