Exhibit A

This page intentionally left blank.

EXHIBIT A
DRAFT RESOLUTION

Before the Housing and Community Development Chief of Planning in and for the County of Monterey, State of California

In the matter of the application of:
PLN240150 - JIMENEZ RODOLFO V & HERMINIA R
RESOLUTION NO. 25-037
Resolution by the Monterey County HCD Chief of Planning:

1) Finding that the project is Categorically Exempt pursuant to CEQA Guidelines section 15301, and there are no exceptions pursuant to Guidelines section 15300.2; and
2) Approving a Coastal Administrative Permit to allow construction of a 1,210 square foot second story addition with a 320 square foot second story deck to an existing single-family dwelling, and construction of a 1,407 square foot attached garage.

[PLN240150 Rodolfo V. & Herminia R. Jimenez, 38 Clausen Rd, North County Area Plan (APN: 119-221-002-000)

The JIMENEZ application (PLN240150) came on for an administrative decision hearing before the Monterey County HCD Chief of Planning on August 20, 2025. Having considered all the written and documentary evidence, the administrative record, the staff report, oral testimony, and other evidence presented the Monterey County HCD Chief of Planning finds and decides as follows:

FINDINGS

1. FINDING: **CONSISTENCY** – The Project, as conditioned, is consistent with the applicable plans and policies which designate this area as appropriate for development.

EVIDENCE:

a) During the course of review of this application, the project has been reviewed for consistency with the text, policies, and regulations in:
- the 1982 Monterey County General Plan (General Plan);
- North County Land Use Plan (NC LUP);
- North County Coastal Implementation Plan (NC CIP), Part 2; and
- Monterey County Zoning Ordinance (Title 20).

No conflicts were found to exist. No communications were received during the course of review of the project indicating any inconsistencies with the text, policies, and regulations in these documents.

b) Project. The project involves additions to an existing one-story 2,120 square foot single family dwelling that include a 1,210 square foot

second floor addition, a 320 square foot second story deck, and a 1,407 square foot attached garage.

c) Allowed Use. The property is located at 38 Clausen Rd in Royal Oaks, located in the North County Land Use Plan (APN:119-221-002-000). The parcel is zoned Medium Density Residential with a maximum Density of 4 units an acre, Coastal Zone or "MDR/4(CZ)", which allows additions to an existing single-family dwelling and non-habitable accessory structures subject to the approval of a Coastal Administrative Permit in each case pursuant to Title 20 sections 20.12.040.A and 20.12.040.H. Consistent with NC LUP policy 4.3.6.D.2, as the additions will have adequate urban services; NC CIP section 20.144.140.A enforces this by requiring appropriate soils report (see Finding 2, Evidence b) to determine the adequacy of the services provided. Therefore, the project is an allowed land use for this site.

d) Lot Legality. The parcel (Assessor's Parcel Number 119-221-002-000, 1.05 acres, Lot 5) is shown in its current configuration and under separate ownership in Map Book Three of Surveys, Page 169; Licensed Surveyors Map of Las Lomas Tract No.5, Sheet 4 and 12 Sheets. Therefore, the County recognizes the subject property as a legal lot of record.

e) Design/Neighborhood and Community Character. The subject property zoning district does not include a Design Control Overlay (see Evidence c) and therefore is not subject to the regulations outlined in Title 20.44. NC CIP section 20.144.020.SSS defines the public viewshed as views visible from Highway 1, Highway 156, Elkhorn Slough Road, Elkhorn and Moro Cojo Sloughs, beaches, dunes, and wetlands, and views to and along the ocean shoreline from Highway 1. The subject property is not visible from any of these viewpoints. Although the project parcel does not contain a Visually Sensitive overlay, pursuant to NC LUP Policy 2.2.2.4 the project is sited in the least visually obtrusive portion of the parcel, taking advantage of existing topography and vegetation for natural screening to minimizes visual impact. Additionally, the project has been designed to minimize tree removal and grading for the building site pursuant of NC LUP policy 2.2.2.5. The colors and materials used are consistent with the neighborhood and community character. The roof consists of composite shingles in an ash-grey, the wood fascia trim and foam window trim will be a nature green, the exterior stucco will be cool-toned grey, and the metal guardrail will be painted a deep brown.

f) Development Standards. Title 20 section 20.12.060 establishes the site development standards applicable to structures within the MDR zoning district. Pursuant to Title 20 section 20.12.060.C, the main structures shall have setbacks of at least 20 feet for the front, 5 feet for the sides, and 10 feet for the rear, and a maximum allowable height of 30 feet. The garage is attached to the proposed residence and therefore are subject to the same site development standards as the main structure pursuant to Title 20 section 20.62.040.K. As proposed, the residence and attached accessory structure will be over 30 feet from the front, over 5 feet from the side, over 10 feet from the rear, and a proposed height of 24 feet 5 inches for the residence as measured from average natural grade. The subject property has an allowable building site coverage of 35 percent,

and as proposed the lot coverage will be 8.5 percent. Therefore, the property complies with the required site development standards based on the applicable MDR zoning district.

g) Cultural Resources. The Monterey County Geographic Information System identified the property to be within a low archaeological sensitivity area. The parcel does not fall within 750 feet of archaeological resources, exempting it from a Coastal Development Permit pursuant of NC CIP section 20.144.110.A.1. Additionally, the requirements to mandate an archaeological report were not met, as outlined in section 20.144.110.B.1.c, since the parcel is not within 750 feet of a known archaeological resource.

h) Land Use Advisory Committee. Subject to Board Order RES 15-043 Exhibit A, the project was not referred to a Land Use Advisory Committee review.

i) The project planner conducted a virtual site inspection to verify that the project on the subject parcel conforms to the plans listed above.

j) The application, project plans, and related support materials submitted by the project applicant to Monterey County HCD-Planning found in Project File PLN240150.

2. FINDING: **SITE SUITABILITY –** The site is physically suitable for the proposed development and/or use.

EVIDENCE:

a) The project has been reviewed for site suitability by the following departments and agencies: HCD-Planning, HCD-Engineering Services, HCD-Environmental Services, Environmental Health Bureau, and North County Fire Protection District. County staff reviewed the application materials and plans to verify that the project on the subject site conforms to the applicable plans and regulations, and there has been no indication from these departments/agencies that the site is not suitable for the development. Conditions recommended have been incorporated.

b) The following reports have been prepared:
   - "Soil Investigation Report (Design Phase)" (LIB250187) prepared by Geronimo Martin Daliva, Salinas, CA on April 24, 2024.

   County staff independently reviewed this report and concurs with their conclusions. There are no physical or environmental constraints that would indicate that the site is not suitable for the use. All development shall be in accordance with these reports.

c) Staff conducted a virtual site inspection on to verify that the site is suitable for this use.

d) The application, project plans, and related support materials submitted by the project applicant to Monterey County HCD-Planning found in Project File PLN240150.

3. FINDING: **HEALTH AND SAFETY –** The establishment, maintenance, or operation of the project applied for will not under the circumstances of this particular case be detrimental to the health, safety, peace, morals, comfort, and general welfare of persons residing or working in the neighborhood of such proposed use, or be detrimental or injurious to property and improvements in the neighborhood or to the general welfare of the County.

EVIDENCE:

a) The project was reviewed by HCD-Planning, HCD- Engineering Services, HCD-Environmental Services, Environmental Health Bureau, and North County Fire Protection District. The respective agencies have recommended conditions, where appropriate, to ensure that the project will not have an adverse effect on the health, safety, and welfare of persons either residing or working in the neighborhood.

b) All necessary public facilities are available to the subject property. Sewer service will be provided by Pajaro County Sanitation District. The Pajaro County Sanitation District wastewater collection and treatment system have adequate remaining capacity for sewage disposal. Potable water is provided by the Pajaro Valley Water Management District. The proposed structure does not require additional fixtures or connections.

c) Staff conducted a virtual site inspection to verify that the site is suitable for this use.

d) The application, project plans, and related support materials submitted by the project applicant to Monterey County HCD-Planning found in Project File PLN240150.

4. FINDING: **NO VIOLATIONS –** The subject property is in compliance with all rules and regulations pertaining to zoning uses, subdivision, and any other applicable provisions of the County's zoning ordinance. No violations exist on the property.

EVIDENCE:

a) Staff reviewed Monterey County HCD-Planning and HCD-Building Services records and is not aware of any violations existing on subject property.

b) Staff conducted a virtual site inspection and researched County records to assess if any violation exists on the subject property.

c) The application, project plans, and related support materials submitted by the project applicant to Monterey County HCD-Planning found in Project File PLN240150.

5. FINDING: **CEQA (Exempt) –** The project is categorically exempt from environmental review and no unusual circumstances were identified to exist for the proposed project.

EVIDENCE:

a) California Environmental Quality Act (CEQA) Guidelines Section 15301 categorically exempts additions to an existing structure.

b) The project includes additions less than 10,000 square feet (see Finding 1), has public services and facilities are available, and is not environmentally sensitive, qualifying it as exempt under Section 15301.

c) None of the exceptions under CEQA Guidelines Section 15300.2 apply to this project. There is no significant effect on the environment due to unusual circumstances. There is no cumulative impact without any prior successive projects of the same type in the same place, over time and no new land use is proposed. The site is not included on any list compiled pursuant to Section 65962.5 of the Government Code to be considered on a hazardous waste site.

d) No adverse environmental effects were identified during staff review of the development application.

e) See supporting Finding Nos. 1 and 2. The application, project plans, and related support materials submitted by the project applicant to Monterey County HCD-Planning found in Project File PLN240150.

6. FINDING: **PUBLIC ACCESS –** The project is in conformance with the public access and recreation policies of the Coastal Act (specifically Chapter 3 of the Coastal Act of 1976, commencing with Section 30200 of the Public Resources Code) and applicable Local Coastal Program, and does not interfere with any form of historic public use or trust rights.

EVIDENCE:

a) No public access is required as part of the project as no substantial adverse impact on access, either individually or cumulatively, as described in NC CIP Section 20.144.150 of the Monterey County Coastal Implementation Plan can be demonstrated.

b) No evidence or documentation has been submitted or found showing the existence of historic public use or trust rights over this property.

c) The subject property is not described as an area where the Local Coastal Program requires visual or physical public access (Figure 6, North County General Plan Shoreline Access/Trails, in the NC LUP).

d) The application, project plans, and related support materials submitted by the project applicant to Monterey County HCD-Planning found in Project File PLN240150.

7. FINDING: **APPEALABILITY –** The decision on this project may be appealed to the Board of Supervisors.

EVIDENCE:

a) Board of Supervisors. Pursuant to Title 20, Section 20.86.030, an appeal may be made to the Board of Supervisors by any public agency or person aggrieved by a decision of an Appropriate Authority other than the Board of Supervisors.

b) Coastal Commission. This project is not appealable through the Coastal Commission as it is not fit the coastal permit descriptions described in 20.86.080.A.

DECISION

NOW, THEREFORE, based on the above findings and evidence, the HCD Chief of Planning does hereby:

1. Find the additions to an existing structure qualifies for a Class 1 Categorical Exemption pursuant to CEQA Guidelines Section 15301;
2. Approve the Coastal Administrative Permit to allow construction of a 1,210 square foot second story addition with a 320 square foot second story deck to an existing single-family dwelling, and construction of a 1,407 square foot attached garage.

All of which are in general conformance with the attached sketch and subject to the attached conditions**,** all being attached hereto and incorporated herein by reference.

PASSED AND ADOPTED this 20th day of August 2025.

_____

Melanie Beretti, AICP
HCD Chief of Planning

COPY OF THIS DECISION MAILED TO APPLICANT ON DATE

THIS APPLICATION IS APPEALABLE TO THE BOARD OF SUPERVISORS. IF ANYONE WISHES TO APPEAL THIS DECISION, AN APPEAL FORM MUST BE COMPLETED AND SUBMITTED TO THE CLERK TO THE BOARD ALONG WITH THE APPROPRIATE FILING FEE ON OR BEFORE _____.

THIS PROJECT IS LOCATED IN THE COASTAL ZONE AND IS APPEALABLE TO THE COASTAL COMMISSION. UPON RECEIPT OF NOTIFICATION OF THE FINAL LOCAL ACTION NOTICE (FLAN) STATING THE DECISION BY THE FINAL DECISION-MAKING BODY, THE COMMISSION ESTABLISHES A 10 WORKING DAY APPEAL PERIOD. AN APPEAL FORM MUST BE FILED WITH THE COASTAL COMMISSION. FOR FURTHER INFORMATION, CONTACT THE COASTAL COMMISSION AT (831) 427-4863 OR AT 725 FRONT STREET, SUITE 300, SANTA CRUZ, CA.

This decision, if this is the final administrative decision, is subject to judicial review pursuant to California Code of Civil Procedure Sections 1094.5 and 1094.6. Any Petition for Writ of Mandate must be filed with the Court no later than the 90th day following the date on which this decision becomes final.

NOTES

1. You will need a building permit and must comply with the Monterey County Building Ordinance in every respect.

   Additionally, the Zoning Ordinance provides that no building permit shall be issued, nor any use conducted, otherwise than in accordance with the conditions and terms of the permit granted or until ten days after the mailing of notice of the granting of the permit by the appropriate authority, or after granting of the permit by the Board of Supervisors in the event of appeal.

   Do not start any construction or occupy any building until you have obtained the necessary permits and use clearances from Monterey County HCD-Planning and HCD-Building Services Department office in Salinas.

2. This permit expires 3 years after the above date of granting thereof unless construction or use is started within this period.

County of Monterey HCD Planning

DRAFT Conditions of Approval/Implementation Plan/Mitigation Monitoring and Reporting Plan

PLN240150

1. PD001 - SPECIFIC USES ONLY

Responsible Department: Planning

Condition/Mitigation Monitoring Measure: This Coastal Administrative permit (PLN240150) allows construction of a 1,210 square foot addition with a 320 square foot deck to an existing 2,270 square foot one-story single family dwelling and construction of a 1,407 square foot attached garage. The property is located at 38 Clausen Road, Royal Oaks (Assessor's Parcel Number 119-221-002-000), North County Land Use Plan, Coastal Zone. This permit was approved in accordance with County ordinances and land use regulations subject to the terms and conditions described in the project file. Neither the uses nor the construction allowed by this permit shall commence unless and until all of the conditions of this permit are met to the satisfaction of the Director of HCD - Planning. Any use or construction not in substantial conformance with the terms and conditions of this permit is a violation of County regulations and may result in modification or revocation of this permit and subsequent legal action. No use or construction other than that specified by this permit is allowed unless additional permits are approved by the appropriate authorities. To the extent that the County has delegated any condition compliance or mitigation monitoring to the Monterey County Water Resources Agency, the Water Resources Agency shall provide all information requested by the County and the County shall bear ultimate responsibility to ensure that conditions and mitigation measures are properly fulfilled. (HCD - Planning)

Compliance or Monitoring Action to be Performed: The Owner/Applicant shall adhere to conditions and uses specified in the permit on an on-going basis unless otherwise stated.

2. PD002 - NOTICE PERMIT APPROVAL

Responsible Department: Planning

Condition/Mitigation Monitoring Measure: The applicant shall record a Permit Approval Notice. This notice shall state:
"A Coastal Administrative Permit (Resolution Number _____) was approved by the Chief of Planning for Assessor's Parcel Number 119-221-002-000 on August 20, 2025. The permit was granted subject to 4 conditions of approval which run with the land. A copy of the permit is on file with Monterey County HCD - Planning."

Proof of recordation of this notice shall be furnished to the Director of HCD - Planning prior to issuance of grading and building permits, Certificates of Compliance, or commencement of use, whichever occurs first and as applicable. (HCD - Planning)

Compliance or Monitoring Action to be Performed: Prior to the issuance of grading and building permits, certificates of compliance, or commencement of use, whichever occurs first and as applicable, the Owner/Applicant shall provide proof of recordation of this notice to the HCD - Planning.

3. PD003(A) - CULTURAL RESOURCES NEGATIVE ARCHAEOLOGICAL REPORT

Responsible Department: Planning

Condition/Mitigation Monitoring Measure: If, during the course of construction, cultural, archaeological, historical or paleontological resources are uncovered at the site (surface or subsurface resources) work shall be halted immediately within 50 meters (165 feet) of the find until a qualified professional archaeologist can evaluate it. Monterey County HCD - Planning and a qualified archaeologist (i.e., an archaeologist registered with the Register of Professional Archaeologists) shall be immediately contacted by the responsible individual present on-site. When contacted, the project planner and the archaeologist shall immediately visit the site to determine the extent of the resources and to develop proper mitigation measures required for recovery.
(HCD - Planning)

Compliance or Monitoring Action to be Performed: The Owner/Applicant shall adhere to this condition on an on-going basis.

Prior to the issuance of grading or building permits and/or prior to the recordation of the final/parcel map, whichever occurs first, the Owner/Applicant shall include requirements of this condition as a note on all grading and building plans. The note shall state "Stop work within 50 meters (165 feet) of uncovered resource and contact Monterey County HCD - Planning and a qualified archaeologist immediately if cultural, archaeological, historical or paleontological resources are uncovered."

When contacted, the project planner and the archaeologist shall immediately visit the site to determine the extent of the resources and to develop proper mitigation measures required for the discovery.

4. PW0005 – DRIVEWAY IMPROVEMENTS

Responsible Department: Public Works

Condition/Mitigation Monitoring Measure: Construct an asphalt driveway connection to Clausen Rd. The design and construction is subject to the approval of the HCD -PWFP. Encroachment Permits are required for all work within the public right-of-way.

Compliance or Monitoring Action to be Performed: Owner/Applicant shall submit the design for review and approval of the HCD-PWFP, obtain an encroachment permit from the HCD -PWFP prior to issuance of building or grading permits, and construct and complete improvements prior to occupancy or commencement of use. Applicant is responsible to obtain all permits and environmental clearances.

NEW ADDITION FOR:
38 CLAUSEN ROAD
WATSONVILLE, CA. 95076
A.P.N.: 119-221-002-000

GENERAL NOTES

1. ALL PLANS, CONSTRUCTION, DESIGN, WORKMANSHIP AND MATERIALS SHALL CONFORM WITH THE REQUIREMENTS OF THE: 2022 CBC, 2022 CEC, 2022 CMC, 2022 CPC, 2022 CFC, 2022 C.En.C., 2022 CGBSC AND COUNTY OF MONTEREY ORDINANCES, ZONING DITRICTS & DEVELOPMENT STANDARDS.
2. JOB SITE SAFETY IS THE SOLE RESPONSIBILITY OF THE OWNER/CONTRACTOR PER CCR TITLE 8. SECTION 336 www.dir.ca.gov/title8/336.html
3. ALL SITE INSPECTIONS REQUIRE A MINIMUM 24 HOURS NOTICE. FIRE DEPARTMENT INSPECTIONS ARE TO BE REQUESTED THROUGH THE BUILDING DIVISION, PLEASE BE SPECIFIC AS TO THE TYPE OF INSPECTION.
4. ALL HOSES USED IN CONNECTION WITH ANY CONSTRUCTION ACTIVITIES SHALL BE EQUIPPED WITH A SHUTOFF NOZZLE. WHEN AN AUTOMATIC SHUTOFF NOZZLE CAN BE PURCHASED OR OTHERWISE OBTAINED FOR THE SIZE OR TYPE OF HOSE IN USE, THE NOZZLE SHALL BE AN AUTOMATIC SHUTOFF NOZZLE.
5. OWNER/CONTRACTOR TO DETERMINE THE LOCATION OF UNDERGROUND UTILITIES AND SERVICES AND PERFORM WORK IN A MANNER WHICH WILL AVOID POSSIBLE DAMAGE TO SUCH.
6. APPROVED ADDRESS NUMBERS AND/OR LETTERS, WITH CONTRASTING BACK ROUND, SHALL BE PLACED ON BUILDING(S) TO BE VISIBLE FROM THE STREET.APPROVED ADDRESSES MUST BE CLEARLY IDENTIFIED WITH REFLECTIVE AND/OR ILLUMINATED NUMBERS AND/OR LETTERS A MINIMUM OF 4" HIGH WITH A MINIMUM STROKE WITH OF 1/2". CRC SECTION R319.1
7. BUILDINGS THAT UNDERGO CONSTRUCTION, ALTERATION OR DEMOLITION SHALL BE IN ACCORDANCE WITH 2022 CFC CHAPTER 33 FIRE SAFETY DURING CONSTRUCTION AND DEMOLITION.

CITY RIGHT-OF-WAY NOTES

ALL OBSTRUCTIONS, IMPROVEMENTS AND/OR CONSTRUCTION WORK IN THE PUBLIC RIGHT-OF-WAY REQUIRE AN ENCROACHMENT PERMIT. PRIOR TO ANY OBSTRUCTION AND/OR WORK IN THE PUBLIC WAY AND/OR IN COUNTY-OWNED PROPERTY, THE CONTRACTOR/DEVELOPER SHALL APPLY FOR AND OBTAIN THE ISSUANCE OF A COUNTY OF MONTEREY ENCROACHMENT PERMIT. CONTACT THE COUNTY DEVELOPMENT ENGINEERING DIVISION TO PROCESS SAID ENCROACHMENT PERMIT AT:

COUNTY of MONTEREY
BUILDING SERVICES DEPARTMENT
1441 SCHILLING PLACE S, SECOND FLOOR, SALINAS, CA. 93901
(831) 755-5025

DEFFERED SUBMITTALS

1. TRUSSES LAYOUT/CALCULATIONS TO BE SUBMITTED TO:
   COUNTY of MONTEREY PH: (831) 755-5025
   BUILDING SERVICES DEPARTMENT
   1441 SCHILLING PLACE, SOUTH 2nd FLOOR
   SALINAS, CA 93901

PROJECT TEAM

OWNER(S):
RODOLFO JIMENEZ
38 CLAUSEN ROAD
WATSONVILLE, CA. 95076
(831) 320-4377
Kjimenez11428@gmail.com

DESIGNER:
E & L BUILDING
DESIGN STUDIO
150 CAYUGA STREET SUITE 1
SALINAS, CA. 93901
O:(831) 250-8069
e_ldesigns@hotmail.com

ENERGY CONSULTANT:
JIM BLOMQUIST
A PLUS GREEN ENERGY
41 C HANGAR WAY
WATSONVILLE, CA. 95076
(831) 728-7717
patti@apges.com

[X] HERS VERIFICATION IS REQUIRED:

REQUIRED SPECIAL FEATURES:
- INDOOR AIR QUALITY, BALANCED FAN
- IAQ VENTILATION SYSTEM: AS LOW AS 0.5 W/CFM
- IAQ VENTILATION SYSTEM HEAT RECOVERY: MINIMUM 75 SRE & 75 ASRE
- IAQ VENTILATION SYSTEM: SUPPLY OUTSIDE AIR INLET, FILTER, & H/ERV CORE ACCESSIBLE PER RACM REFERENCE MANUAL
- INSULATION BELOW ROOF DECK

HERS FEATURE SUMMARY:
- QUALITY INSULATION INSTALLATION (QII)
- INDOOR AIR QUALITY VENTILATION
- MINIMUM AIRFLOW
- FAN EFFICIANCY WATTS/CFM
- VERIFIED HEAT PUMP RATED HEATING CAPACITY
- DUCT LEAKAGE TESTING
- DUCT SEALING REQUIRED IF A DUST SYSTEM COMPONENT, PLENUM, OR AIR HANDLING UNIT IS ALTERED

SPECIAL INSPECTIONS:
ADVANCED TESTING
& INSPECTION, LLC.
540-B BRUNKEN AVENUE
SALINAS, CA. 93901
(831) 422-2272
atitesting@gmail.com

STRUCTURAL ENGINEER:
JARED PECHAN
JP ENGINEERING
LIC. No. 69153
PO BOX 51848
PACIFIC GROVE, CA. 93950
PH. 831-264-3217
jpengr@live.com

ROOF TRUSS MANUFACTURER:
DAVE JR. SCHARTON
CENTRAL COAST TRUSS
2624-J EL CAMINO REAL NORTH
SALINAS, CA. 93907
(831) 757-8787
dave-jr@centralcoasttruss.com

SCOPE OF WORK

LOWER FLOOR 3 CAR GARAGE ADDITION	1,407 S.F.	NEW
UPPER FLOOR ADDITION	1,210 S.F.	NEW
NEW DECK	320 S.F.	NEW

VICINITY MAP N.T.S.

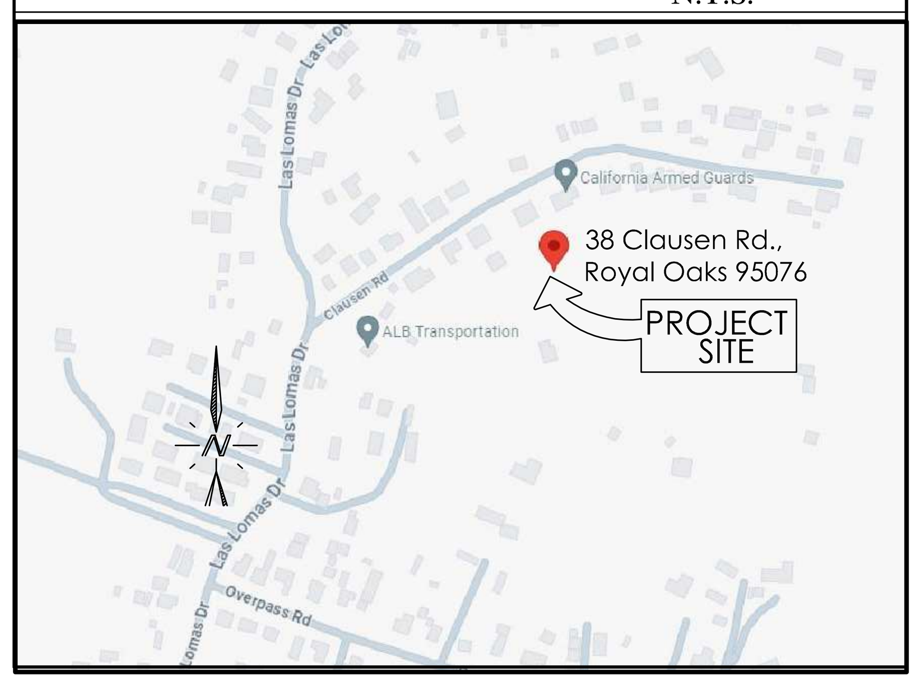

SHEET INDEX

ARCHITECTURAL

A0. GENERAL NOTES & C&D WASTE REDUCTION PLAN
A1.0. SITE PLAN, SOURCE CONTROL PLAN, STORM WATER BMP's & EROSION & SEDIMENT CONTROL PLAN
A1.1. PARTIAL SITE PLAN
A2.0. EXISTING FLOOR PLAN
A2.1. EXISTING ELEVATIONS
A3.0. PROPOSED FLOOR PLAN
A3.1. PROPOSED ELEVATIONS
A4. CODE REQUIREMENTS
A5. ROOF PLAN
A6. SECTION
A7. ELECTRICAL PLAN
D1. TYPICAL DETAILS
D2. TYPICAL DETAILS
D3. TYPICAL DETAILS

PLUMBING

P1. PLUMBING PLAN (WATER)
P2. PLUMBING PLAN (SEWER)

ENERGY

EN.1 ENERGY COMPLIANCE
EN.2 ENERGY COMPLIANCE
EN.3 ENERGY COMPLIANCE
GB.1 GREEN BUILDING

STRUCTURAL

S1. STRUCTURAL NOTES
S2. SHEARWALL PLAN
S3. SHEARWALL PLAN
S4. FOUNDATION PLAN
S5. FRAMING PLAN
S6. STRUCTUAL DETAILS
S7. STRUCTUAL DETAILS
S8. STRUCTUAL DETAILS
WSWH1.2 STRONGWALL WSWH BACK TO BACK ANCHORAGE DETAILS
WSWH2 STRONGWALL WSWH FRAMING DETAILS

DATA

JURISTICTION:	COUNTY OF MONTEREY	
BUILDING CODE:	BUILDING	:2022 C.B.C.
CALIFORNIA GREEN	ELECTRICAL	:2022 C.E.C.
BUILDING STANDARDS	MECHANICAL	:2022 C.M.C.
CODE: 2022 C.G.B.S.C.	PLUMBING	:2022 C.P.C.
	FIRE	:2022 C.F.C.
	ENERGY CODE	:2022 C.En.C.

ZONING:	MDR/4(CZ)	
ASSESSORS PARCEL NO:	119-221-002-000	
CURRENT USE:	RESIDENTIAL R-3 SINGLE FAMILY DWELLING	
PROPOSED USE:	RESIDENTIAL R-3 SINGLE FAMILY DWELLING	
OCCUPANCY GROUP:	R-3/U-1	
NUMBER OF STORY:	TWO STORY BUILDING	
CONSTRUCTION TYPE:	V-B	
BUILDING FIRE SPRINKLERS SYSTEMS:	NO SPRINKLER SYSTEM	
LOT SIZE:	50,442	100%
LANDSCAPE:	EXISTING LANDSCAPE	

EXISTING BUILDINGS

MAIN DWELLING	2,120 S.F.	EXISTING
PORCH	66 S.F.	EXISTING
PATIO	180 S.F.	EXISTING
STORAGE	170 S.F.	EXISTING
SHED	180 S.F.	EXISTING
SHED	180 S.F.	EXISTING
TOTAL:	2,896 S.F.	

PROPOSED BUILDINGS

LOWER FLOOR GARAGE ADDITION	1,407 S.F.	NEW
UPPER FLOOR ADDITION	1,210 S.F.	NEW
NEW DECK	320 S.F.	NEW
TOTAL:	2,937 S.F.	

MontereyCounty
Housing and Community Development
Permit Center
1441 Schilling Place South, Second Floor, Salinas CA 93901
Phone: (831)755-5025 – Fax 757-9516

Construction & Demolition - Waste Reduction and Recycling Plan

Permit #
Date 5/22/24
Site Address: 38 CLAUSEN ROAD Zip Code 95076
Company/Owner Name: RODOLFO JIMENEZ
Mailing Address: 38 CLAUSEN ROAD Contact Phone: (831) 320-4377
City, State and Zip: WATSONVILLE, CA. 95076 E-mail: Kjimenez11428@gmail.com
Type of Project: [ ] New Construction [X] Alteration [ ] Demolition [ ] Roofing [ ] Other
Project Description: LOWER FLOOR 3 CAR GARAGE ADDITION 1,407 S.F.
UPPER FLOOR ADDITION 1,210 S.F.
NEW DECK 320 S.F.

1. What materials will be generated by your project?

	Asphalt		Bricks/Rock	x	Cardboard
x	Concrete/Cement	x	Dirt/Clean Fill	x	Drywall/Sheetrock
x	Glass/Windows	x	Lumber/Wood	x	Metals
x	Mixed C&D		Roofing Materials		Salvaged Items
	Other (Specify)				

2. How will the C&D debris be handled during your project? (Please check all that apply)
   Source Separation – Materials are separated on-site and placed in material-specific bins.
   Mixed Loads – Clean recyclable C&D materials are comingled into one bin and delivered to a processing facility. Trash is collected in a separate bin and delivered to an authorized disposal facility.
3. How do you plan to dispose of the C&D debris that you will generate with your project?
   - [ ] I will hire the exclusive franchise hauler. Save Invoices!
   - [X] I will self-haul C&D debris using the owner/contractor's equipment and vehicles. Save All Receipts!
4. ATTEST: By signing below I am affirming:
   - I am the owner/agent for this permit application and have read the requirements of the ordinance.
   - I will submit a Waste Reduction & Recycling Plan with the permit application, and, to the best of my ability, I agree to recycle, divert and/or salvage the materials listed above;
   - I will submit a Waste Reduction & Recycling Report describing diversion activities and showing actual tonnage data for all diverted and disposed materials.
   - I understand that failure to comply with the County of Monterey C&D recycling and reporting requirements may result in legal enforcement and penalties and may delay issuance of permits, the Certificate of Occupancy or approval of the final inspection.

RODOLFO JIMENEZ 5/22/24 RODOLFO JIMENEZ
Applicant's Signature Date Print Name/Title (owner, contractor, agent)

MONTEREY COUNTY
HOUSING AND COMMUNITY DEVELOPMENT
Erik V. Lundquist, AICP, Director
HOUSING, PLANNING, BUILDING, ENGINEERING, ENVIRONMENTAL SERVICES
1441 Schilling Place, South 2nd Floor
Salinas, California 93901-4527
(831)755-5025
www.co.monterey.ca.us

STATEMENT OF SPECIAL INSPECTIONS

SITE ADDRESS 38 CLAUSEN ROAD	APN 119-221-002-000	BP#
Owner RODOLFO JIMENEZ	Contractor	
Address 38 CLAUSEN ROAD	Address	
City/St WATSONVILLE, CA. Zip 95076 Phone (831) 320-4377	City/St Zip Phone	
Petitioner RODOLFO JIMENEZ	Engineer/Architect	
Address 38 CLAUSEN ROAD	Address	
City/St WATSONVILLE, CA. Zip 95076 Phone (831) 320-4377	City/St Zip Phone	
PROJECT DESCRIPTION: LOWER FLOOR 3 CAR GARAGE ADDITION / UPPER FLOOR ADDITION / NEW DECK	1,407 S.F. / 1,210 S.F. / 320 S.F.	

This "STATEMENT OF SPECIAL INSPECTIONS" is submitted in fulfillment of the requirements of CBC Sections 1704 and 1705. This form is structured after and used by permission from the Structural Engineers Association of Northern California's (SEAONC) model statement of Special Inspections. Also included shall be the following:
- [X] "LIST OF TESTING AGENCIES" (page 2). A list of the testing agencies and other special inspectors that will be retained to conduct the tests and inspections for this project. ADVANCED TESTING INSPECTIONS
- [X] "SCHEDULE OF SPECIAL INSPECTION" (page 3 - 6). The Schedule of Special Inspections summarizes the Special Inspections and tests required. Special Inspectors will refer to the approved plans and specifications for detailed special inspection requirements. Any additional tests and inspections required by the approved plans and specifications will also be performed. EPOXY / DOWELS

Special Inspections and Testing will be performed in accordance with the approved plans and specifications, this statement and CBC sections 1704, 1705, 1707, and 1708. Interim reports will be submitted to the Director of Building Services and the Registered Design Professional in Responsible Charge in accordance with CBC Section 1704.1.2

A Final Report of Special Inspections documenting required Special Inspections, testing and correction of any discrepancies noted in the inspections shall be submitted prior to issuance of a Certificate of Use and Occupancy (Section 1704.1.2). The Final Report will document:
- Required special inspections.
- Correction of discrepancies noted in inspections.

The Owner recognizes his or her obligation to ensure that the construction complies with the approved permit documents and to implement this program of special inspections. In partial fulfillment of these obligations, the Owner will retain and directly pay for the Special Inspections as required in CBC Section 1704.1.

This plan has been developed with the understanding that the Director of Building Services will:
- Review and approve the qualifications of the Special Inspectors who will perform the inspections.
- Monitor special inspection activities on the job site to assure that the Special Inspectors are qualified and are performing their duties as called for in this Statement of Special Inspection.
- Review submitted inspection reports.
- Perform inspections as required by the local building code.

I have read and agree to comply with the terms and conditions of this statement

Prepared By: [X] Designer [ ] Project Engineer [ ] Architect: Registered Design Professional in Charge	Signature: [signature] Lic. # Date: 1/5/24
Owner Name: RODOLFO JIMENEZ Owner's Authorization	Signature: *RODOLFO JIMENEZ* Date: 1/5/24
Inspection Agency / Inspector Name: MOE TAVAKOLIAN	Signature: *MTAVAKOLIAN* Date: 1/5/24
Building Official: Building Official's Acceptance	Signature: Date:

BSD-FO-040/Special Inspection Form/07/27/21
1 of 7

E & L
BUILDING
DESIGN STUDIO
150 CAYUGA ST.
SUITE 1
SALINAS, CA. 93901
O: (831)250-8069
e_ldesigns@hotmail.com

REVISION
DATE:
BY:
0

38 CLAUSEN ROAD
38 CLAUSEN ROAD
WATSONVILLE, CA. 95076
A.P.N.: 119-221-002-000

TITLE:
GENERAL NOTES
SCALE: 1/8" = 1'-0"

DATE:
5/22/24

JOB NUMBER:
23-54

PAGE:
A0

THE USE OF THESE PLANS AND SPECIFICATIONS SHALL BE RESTRICTED TO THE ORIGINAL SITE FOR WHICH THEY WERE PREPARED AND PUBLICATION THEREOF IS EXPRESSLY LIMITED TO SUCH USE. REUSE, REPRODUCTION, OR PUBLICATION BY ANY METHOD, IN WHOLE OR IN PART, IS PROHIBITED. TITLE TO THE PLANS AND SPECIFICATIONS REMAINS WITH THE DESIGNER, AND VISUAL CONTACT WITH THEM CONSTITUTES PRIMA FACE EVIDENCE OF THE ACCEPTANCE OF THESE RESTRICTIONS.

CONSTRUCTION INSPECTION REQUIREMENTS

23. PRIOR TO COMMENCEMENT OF ANY LAND DISTURBANCE, THE OWNER/CONTRACTOR SHALL ENSURE ALL NECESSARY SEDIMENT CONTROLS ARE IN PLACE AND IN COMPLIANCE WITH BMP FACT SHEETS ON CD1.
24. DURING CONSTRUCTION, INSPECTIONS BY THE COUNTY OF MONTEREY WILL BE CONDUCTED TO INSPECT DRAINAGE DEVICE INSTALLATION, REVIEW THE MAINTENANCE AND EFFECTIVENESS OF BMPS INSTALLED, AS WELL AS, TO VERIFY THAT POLLUTANTS OF CONCERN ARE NOT DISCHARGED FORM THE SITE.
25. PRIOR TO FINAL INSPECTION, THE OWNER/CONTRACTOR SHALL ENSURE THAT ALL DISTURBED AREAS HAVE BEEN STABILIZED AND THAT ALL TEMPORARY EROSION AND SEDIMENT CONTROL MEASURES THAT ARE NO LONGER NEEDED HAVE BEEN REMOVED.
26. CONTRACTOR SHALL SCHEDULE INSPECTIONS WITH THE COUNTY OF MONTEREY AT ALL STAGES OF CONSTRUCTION OF THE POST CONSTRUCTION (LID) FEATURES.

RIGHT-OF-WAY NOTES

1. ALL OBSTRUCTIONS, IMPROVEMENTS AND/OR CONSTRUCTION WORK IN THE PUBLIC RIGHT-OF-WAY REQUIRE AN ENCROACHMENT PERMIT. PRIOR TO ANY OBSTRUCTION AND/OR WORK IN THE PUBLIC WAY AND/OR IN COUNTY-OWNED PROPERTY, THE CONTRACTOR/OWNER SHALL APPLY FOR AND OBTAIN THE ISSUANCE OF A COUNTY OF MONTEREY ENCROACHMENT PERMIT. THE FEE IS IN ADDITION TO AND SEPARATE FROM BUILDING PERMIT. CONTACT THE COUNTY'S DEVELOPMENT ENGINEERING DIVISION TO PROCESS SAID ENCROACHMENT PERMIT AT:
2. DAMAGED SIDEWALK SHALL BE RECONSTRUCTED, PLEASE VERIFY AND INCLUDE RECONSTRUCTION OF ANY DAMAGED SIDEWALK.
3. CONTRACTOR/OWNER SHALL REMOVE GRASS AND WEEDS GROWING IN THE SIDEWALK. PREVENT THE USE OF HERBICIDES.
4. CONSTRUCTION BEST MANAGEMENT PRACTICES SHALL BE IMPLEMENTED DURING CONSTRUCTION SEE SHEET CD1 BMP BROCHURES

24-HOUR PERSON RESPONSIBLE

FOR MAINTAINING THE E&SC PLAN, THE QSD, QSP AND LRP

NAME: STELLA D. ROSENDIN

CONTACT: (408) 202-7566

COUNTY OF MONTEREY NPDES NOTES:

☒ LOW PRIORITY PROJECT

EROSION & SEDIMENT CONTROL

11. NATURAL FEATURES, INCLUDING VEGETATION, TERRAIN, WATERCOURSE AND SIMILAR RESOURCES SHALL BE PRESERVED, WHERE POSSIBLE
12. DURING THE RAINY SEASON **(OCTOBER 15TH TO APRIL 15TH)**:
    - GRADING ACTIVITIES MUST BE SCHEDULED TO MINIMIZE BARE GRADED AREAS.
    - SUFFICIENT QUANTITIES OF EROSION CONTROL MATERIALS SHALL BE KEPT ON SITE AT ALL TIMES TO BE INSTALLED AS SOON AS POSSIBLE AND PRIOR TO ANY PRECIPITATION EVENTS.
13. EFFECTIVE SOIL COVER SHALL BE PROVIDED ON ALL FINISHES SLOPES, OPEN SPACE, UTILITY BACKFILL AND COMPLETED LOTS THAT ARE NOT SCHEDULED TO BE RE-DISTURBED FOR MINIMALLY 14 DAYS.
14. MINIMIZE SOIL COMPACTION FOR AREAS THAT WILL REMAIN PERVIOUS OR USED FOR LID MEASURES.
15. WHERE FEASIBLE, TOP SOIL SHALL BE STOCKPILED AND REAPLIED UPON COMPLETION OF GRADING ON SLOPES OF LESS THAN TWENTY PERCENT

TRACKING CONTROL/STABILIZED CONSTRUCTION ENTRANCE/EXIT

17. ACCESS ROADS SHALL BE CLEANED DAILY (IF NECESSARY) AND PRIOR TO ANY RAIN EVENT.

MATERIALS & WASTE MANAGEMENT

19. WASTE MATERIAL DUMPSTER, REQUIRE DUMPSTER SHALL BE COVERED NIGHTLY AND PROTECTED FROM RAIN.
20. ALL CONSTRUCTION MATERIALS THAT ARE NOT ACTIVELY BEING USED MUST BE RAISED AND COVERED.
21. SHOW LOCATIONS OF PORTA-POTTIES WITH SECONDARY CONTAINMENT, INDICATE ON PLAN IF NO PORTA-POTTIES WILL BE USED.
22. SHOW LOCATION OF AND DETAIL WASHOUT AREA/WASTE PIT FOR DISPOSAL OF "WET" CONSTRUCTION MATERIALS SUCH AS CONCRETE, STUCCO AND PAINT.

BEST MANAGEMENT PRACTICE NOTES

1. PLACE GRAVEL BAGS AROUND NEARBY, DOWNSTREAM STORM INLET(S) DURING CONSTRUCTION.
2. CONCRETE/ STUCCO WASHOUT AREA MUST BE PROVIDED.
3. ALL DAMAGED/ EXISTING STREET FRONTAGE IMPROVEMENTS TO BE REPAIRED/ REPLACED/ BROUGHT UP TO CURRENT CODE.
4. DURING CONSTRUCTION THE OWNER/CONTRACTOR SHALL MAINTAIN THE RIGHT-OF-WAY (STREET/SIDEWALK) FREE FROM DEBRIS AND DIRT.
5. ANY WORK WITHIN RIGHT-OF-WAY SHALL REQUIRE AN ENCROACHMENT PERMIT.

DRAINAGE NOTES

1. DRAINAGE ACROSS PROPERTY LINES SHALL NOT EXCEED THAT WHICH EXISTED PRIOR TO GRADING. EXCESS OR CONCENTRATED DRAINAGE SHALL BE CONTAINED ON SITE OR DIRECTED TO AN APPROVED DRAINAGE FACILITY. EROSION OF THE GROUND IN THE AREA OF DISCHARGE SHALL BE PREVENTED BY INSTALLATION OF NON-EROSIVE DOWN DRAINS OR OTHER DEVICES.
2. THE GROUND SURFACE IMMEDIATELY ADJACENT TO THE BUILDING FOUNDATION SHALL BE SLOPED AWAY FROM THE BUILDING AT A SLOPE OF NOT LESS THAN ONE UNIT VERTICAL IN 20 UNITS HORIZONTAL (5-PERCENT SLOPE) FOR A MINIMUM DISTANCE OF 10 FEET MEASURED PERPENDICULAR TO THE FACE OF THE FOUNDATION.

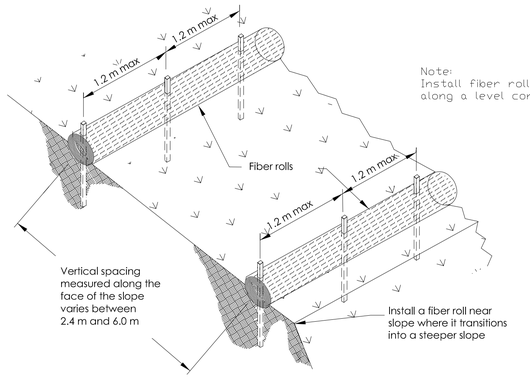

Note:
Install fiber roll along a level contour.

2 TYPICAL FIBER ROLL INSTALLATION
N.T.S.

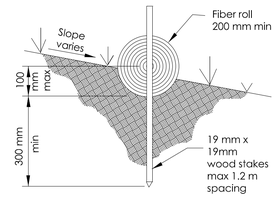

3 ENTRENCHMENT DETAIL
N.T.S.

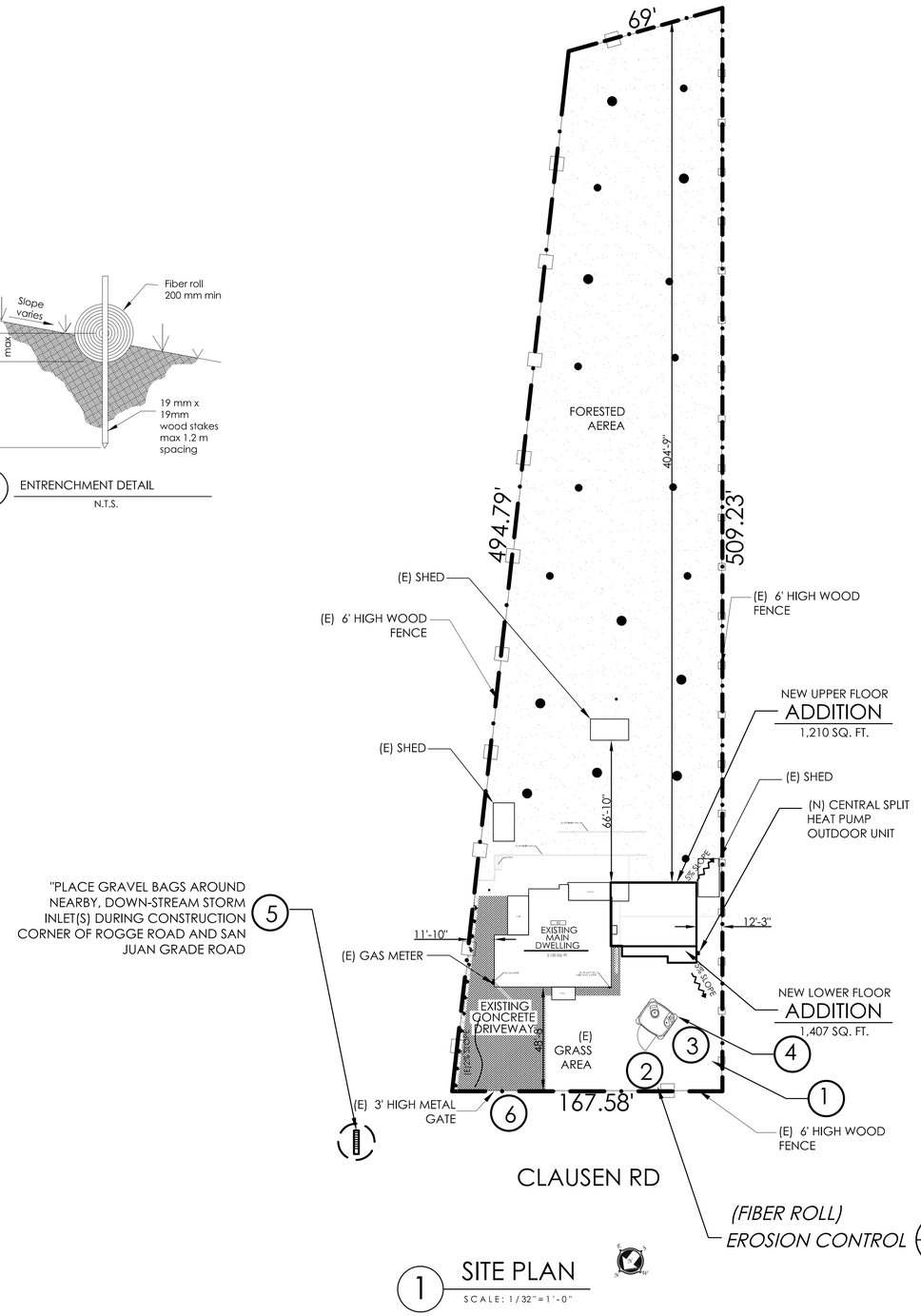

1 SITE PLAN
SCALE: 1/32"=1'-0"

LEGEND

- PROPERTY LINE
- PROPERTY FENCE
- (E) GAS
- (E) SANITARY SEWER
- (E) WATER
- (E) TREES
- (E) LANDSCAPE AREA
- (E) GRASS AREA
- (E) DIRT AREA

CAL GREEN NOTES

1. THE CAL-GREEN MANDATORY REQUIREMENTS ARE LOCATED ON SHEET GB. 1

EROSION & SEDIMENT CONTROL NOTES:

1. CONTRACTOR'S STAGING AREA: THE CONTRACTOR'S STAGING AREA SHALL BE SURROUNDED BY FIBER ROLLS. THE STAGING AREA WILL BE USED TO STORE DELIVERED MATERIALS, AND FOR OVERNIGHT EQUIPMENT PARKING/FUELING. STORED CONSTRUCTION MATERIALS SHALL BE MAINTAINED IN THEIR ORIGINAL CONTAINERS, AND COVERED AT ALL TIMES. PETROLEUM PRODUCTS AND HAZARDOUS MATERIALS SHALL BE STORED WITHIN SECONDARY CONTAINMENT STRUCTURES OR A STORAGE SHED. EQUIPMENT FUELING AND MAINTENANCE WILL ONLY OCCUR WITHIN THE DESIGNATED STAGING AREA. DRIP PANS OR ABSORBENT PADS MUST BE USED DURING ALL FUELING OR MAINTENANCE ACTIVITIES. AN AMPLE SUPPLY OF SPILL CLEANUP MATERIALS SHALL BE MAINTAINED IN THE STAGING AREA AT ALL TIMES.
2. WASTE MANAGEMENT: SOLID WASTE WILL BE LOADED DIRECTLY ONTO TRUCKS FOR OFF-SITE DISPOSAL. WHEN ON-SITE STORAGE IS NECESSARY, SOLID WASTES WILL BE STORED IN WATERTIGHT DUMPSTERS IN THE GENERAL STORAGE AREA OF THE CONTRACTOR'S YARD. DUMPSTERS AND/OR TRASH BINS SHALL BE COVERED AT THE END OF EACH WORK DAY. HAZARDOUS WASTES SHALL NOT BE STORED ONSITE. CONSTRUCTION DEBRIS AND GENERAL LITTER WILL BE COLLECTED DAILY AND WILL NOT BE ALLOWED NEAR DRAINAGE INLETS OR DRAINAGE SYSTEMS.
3. STOCKPILE MANAGEMENT: SOIL STOCKPILES MUST BE COVERED OR STABILIZED (I.E. WITH SOIL BINDERS) IMMEDIATELY IF THEY ARE NOT SCHEDULED TO BE USED WITHIN 14 DAYS. ACTIVE SOIL STOCKPILES SHALL BE WATERED TWICE DAILY TO AVOID WIND EROSION. SURROUND ALL STOCKPILES WITH FIBER ROLLS OR SILT FENCE. STOCKPILES OF "COLD MIX", TREATED WOOD, AND BASIC CONSTRUCTION MATERIALS SHOULD BE PLACED ON AND COVERED WITH PLASTIC SHEETING OR COMPARABLE MATERIAL AND SURROUNDED BY E BERN.
4. SANITARY/SEPTIC WASTE MANAGEMENT: PORTABLE TOILETS WILL BE PROVIDED AND MAINTAINED ONSITE FOR THE DURATION OF THE PROJECT. All portable toilets will be equipped with a secondary containment tray, and shall be located a minimum of 50' from all operational storm drain inlets. Weekly maintenance shall be provided and wastes legally disposed of off-site.
5. DRAIN INLET PROTECTION: PLACE GEOTEXTILE FILTER FABRIC FOR PROTECTION
6. ACCESS ROADS SHALL BE CLEANED DAILY (IF NECESSARY) AND PRIOR TO ANY RAIN EVENT.

E & L
BUILDING DESIGN STUDIO
150 CAYUGA ST. SUITE I
SALINAS, CA. 93901
O: (831)250-8069
e_ldesigns@hotmail.com

REVISION
DATE:
BY:
0

38 CLAUSEN ROAD

38 CLAUSEN ROAD
WATSONVILLE, CA. 95076
A.P.N.: 119-221-002-000

TITLE: SITE PLAN

SCALE: 1/32" = 1'-0"

DATE: 5/22/24

JOB NUMBER: 23-54

PAGE: A1.0

THE USE OF THESE PLANS AND SPECIFICATIONS SHALL BE RESTRICTED TO THE ORIGINAL SITE FOR WHICH THEY WERE PREPARED AND PUBLICATION THEREOF IS EXPRESSLY LIMITED TO SUCH USE. REUSE, REPRODUCTION, OR PUBLICATION BY ANY METHOD, IN WHOLE OR IN PART, IS PROHIBITED. TITLE TO THE PLANS AND SPECIFICATIONS REMAINS WITH THE DESIGNER, AND VISUAL CONTACT WITH THEM CONSTITUTES PRIMA FACE EVIDENCE OF THE ACCEPTANCE OF THESE RESTRICTIONS.

LEGEND

- PROPERTY LINE
- PROPERTY FENCE
- (E) GAS
- (E) SANITARY SEWER
- (E) WATER
- (E) TREES
- (E) LANDSCAPE AREA
- (E) GRASS AREA
- (E) DIRT AREA

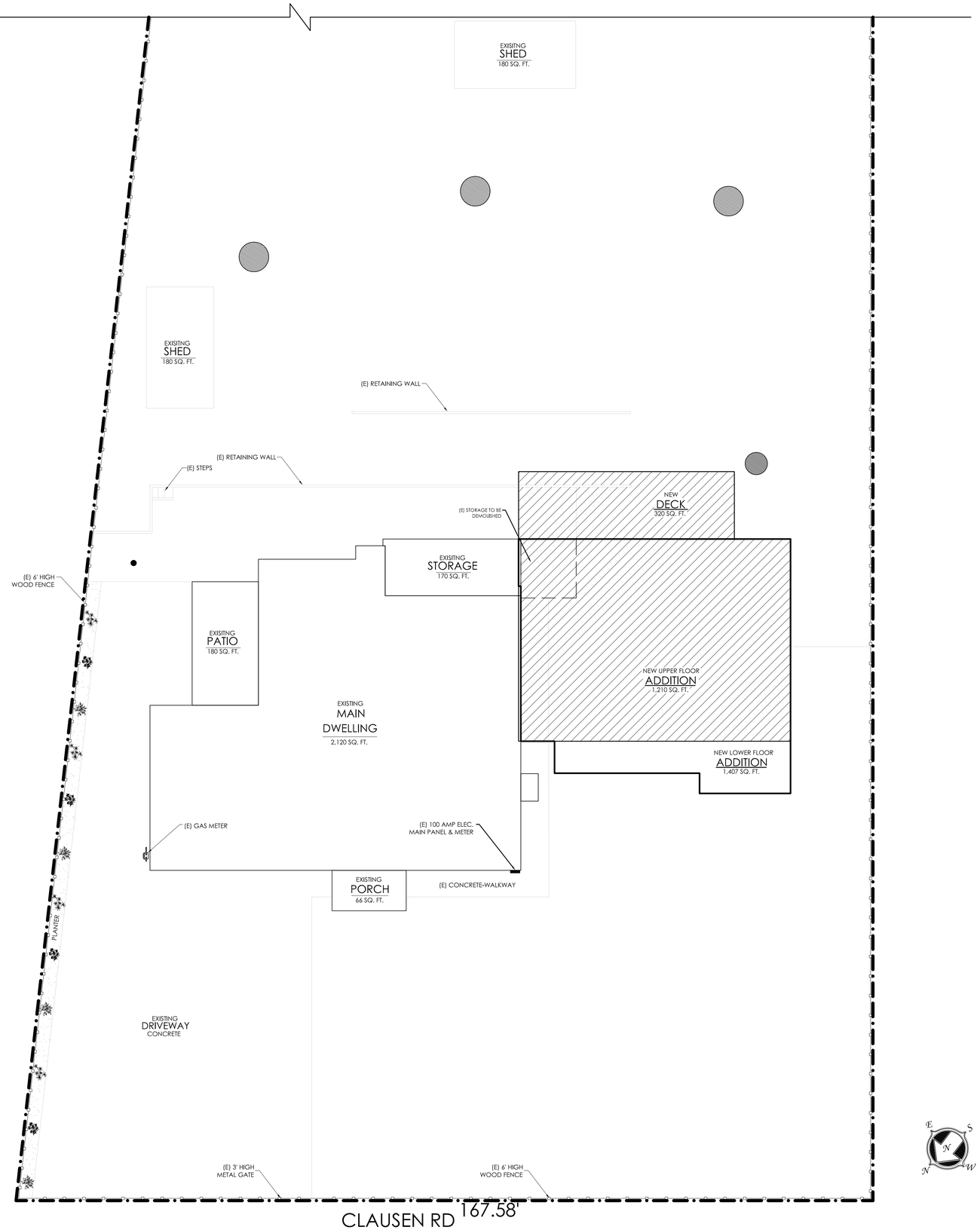

1 PARTIAL SITE PLAN

SCALE: 1/8"=1'-0"

E & L
BUILDING DESIGN STUDIO
150 CAYUGA ST. SUITE I
SALINAS, CA. 93901
O: (831)250-8069
e_ldesigns@hotmail.com

REVISION
DATE:
BY:
0

38 CLAUSEN ROAD

38 CLAUSEN ROAD
WATSONVILLE, CA. 95076
A.P.N.: 119-221-002-000

TITLE: PARTIAL SITE PLAN

SCALE: 1/8"=1'-0"

DATE: 5/22/24

JOB NUMBER: 23-54

PAGE: A1.1

THE USE OF THESE PLANS AND SPECIFICATIONS SHALL BE RESTRICTED TO THE ORIGINAL SITE FOR WHICH THEY WERE PREPARED AND PUBLICATION THEREOF IS EXPRESSLY LIMITED TO SUCH USE. REUSE, REPRODUCTION, OR PUBLICATION BY ANY METHOD, IN WHOLE OR IN PART, IS PROHIBITED. TITLE TO THE PLANS AND SPECIFICATIONS REMAINS WITH THE DESIGNER, AND VISUAL CONTACT WITH THEM CONSTITUTES PRIMA FACE EVIDENCE OF THE ACCEPTANCE OF THESE RESTRICTIONS.

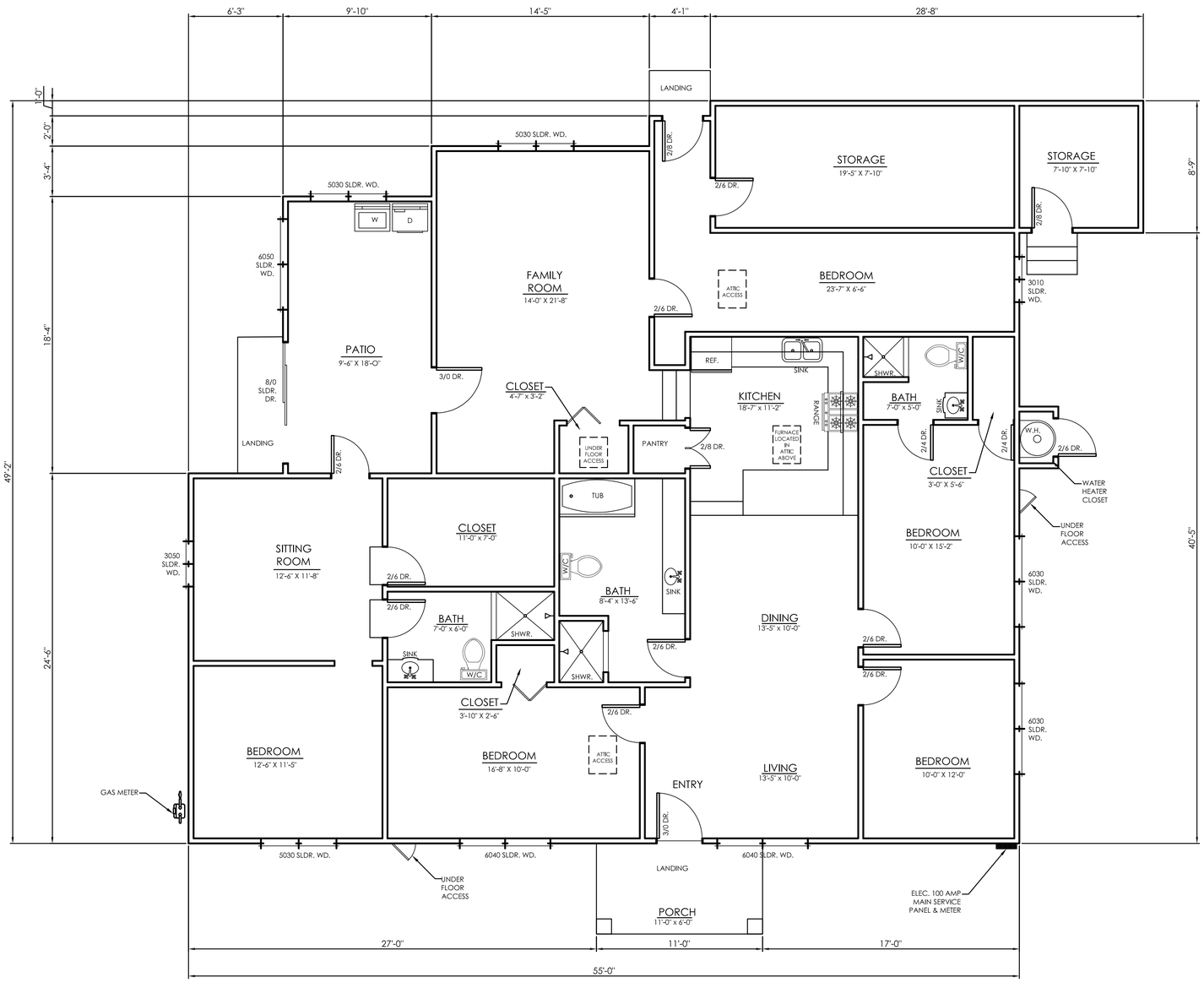

1 EXISTING FLOOR PLAN
SCALE: 1/4"=1'-0"

E & L
BUILDING DESIGN STUDIO
150 CAYUGA ST.
SUITE I
SALINAS, CA. 93901
O: (831)250-8069
e_ldesigns@hotmail.com

REVISION
DATE:
BY:
0

38 CLAUSEN ROAD

38 CLAUSEN ROAD
WATSONVILLE, CA. 95076
A.P.N.: 119-221-002-000

TITLE:
EXISTING FLOOR PLANS

SCALE: 1/4"=1'-0"

DATE:
5/22/24

JOB NUMBER:
23-54

PAGE:
A2.0

THE USE OF THESE PLANS AND SPECIFICATIONS SHALL BE RESTRICTED TO THE ORIGINAL SITE FOR WHICH THEY WERE PREPARED AND PUBLICATION THEREOF IS EXPRESSLY LIMITED TO SUCH USE. REUSE, REPRODUCTION, OR PUBLICATION BY ANY METHOD, IN WHOLE OR IN PART, IS PROHIBITED. TITLE TO THE PLANS AND SPECIFICATIONS REMAINS WITH THE DESIGNER, AND VISUAL CONTACT WITH THEM CONSTITUTES PRIMA FACE EVIDENCE OF THE ACCEPTANCE OF THESE RESTRICTIONS.

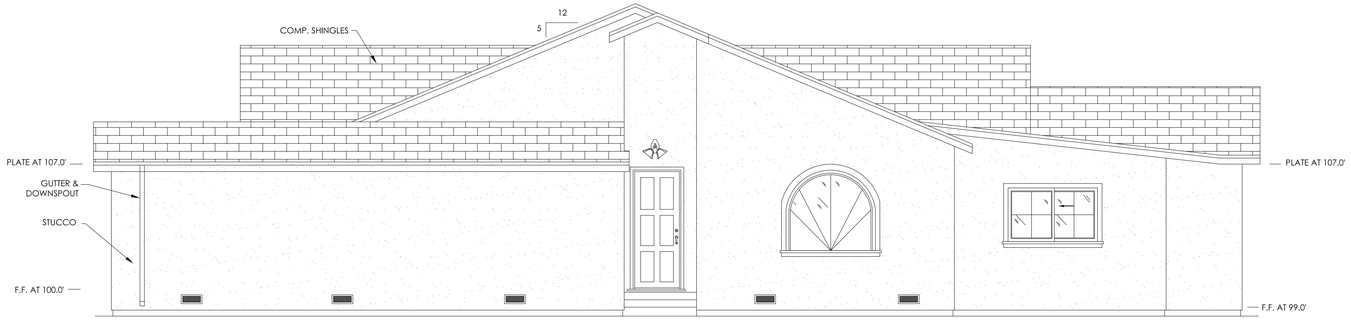

4 SOUTH ELEVATION (REAR ELEVATION)
SCALE: 1/4"=1'-0"

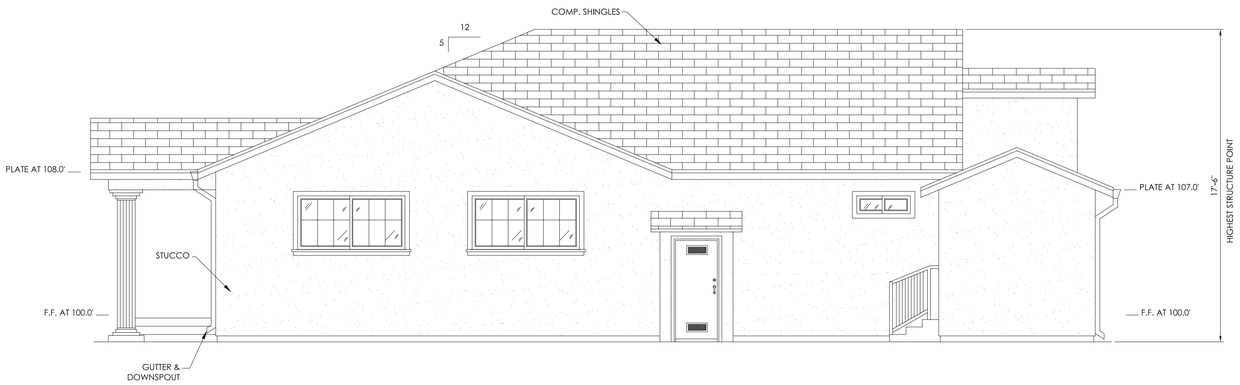

2 WEST ELEVATION (SIDE ELEVATION)
SCALE: 1/4"=1'-0"

Exterior Finishes

ROOF:	ASPHALT COMP. SHINGLE
ROOF PITCH:	5:12 GABLE ROOF
FASCIA/RAKE:	2X6 PRIMED SPRUCE
OVERHANG:	1'-0" EAVE AND GABLE
GUTTER/: DOWNSPOUTS	GUTTER METAL DOWNSPOUTS W/SPLASH BLOCKS
WALL:	STUCCO
TRIM	PAINTED FOAM
WINDOWS:	VINYL WITH GRID

Exterior Colors:

STUCCO:	TAN BROWN
ROOF:	GRAY
WINDOW:	WHITE
TRIM:	BROWM

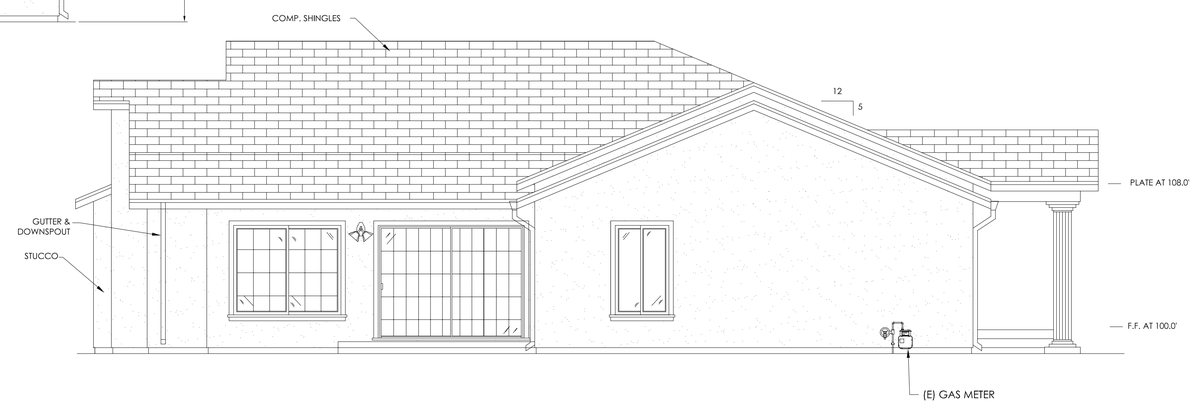

3 EAST ELEVATION (SIDE ELEVATION)
SCALE: 1/4"=1'-0"

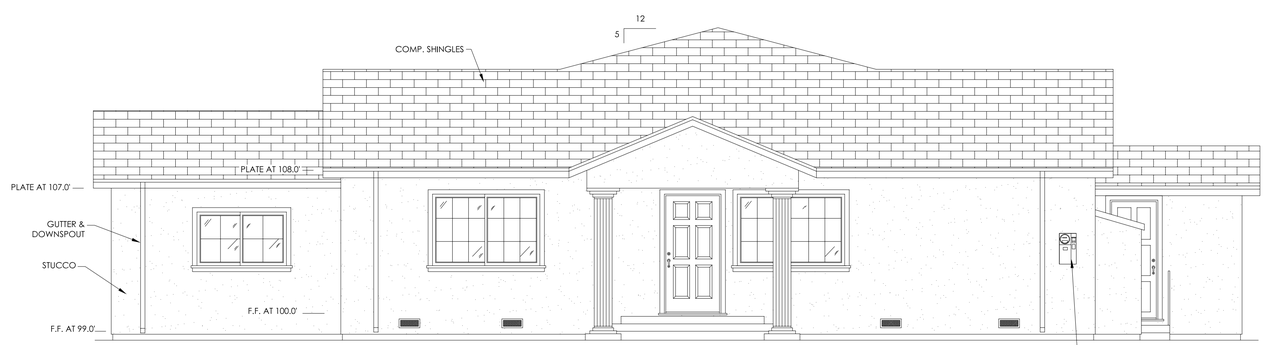

1 NORTH ELEVATION (FRONT ELEVATION)
SCALE: 1/4"=1'-0"

E & L
BUILDING DESIGN STUDIO
150 CAYUGA ST. SUITE I
SALINAS, CA. 93901
O: (831)250-8069
e_ldesigns@hotmail.com

REVISION
DATE:
BY:
0

38 CLAUSEN ROAD

38 CLAUSEN ROAD
WATSONVILLE, CA. 95076
A.P.N.: 119-221-002-000

TITLE: EXISTING ELEVATIONS

SCALE: 1/4" = 1'-0"

DATE: 5/22/24

JOB NUMBER: 23-54

PAGE: A2.1

THE USE OF THESE PLANS AND SPECIFICATIONS SHALL BE RESTRICTED TO THE ORIGINAL SITE FOR WHICH THEY WERE PREPARED AND PUBLICATION THEREOF IS EXPRESSLY LIMITED TO SUCH USE. REUSE, REPRODUCTION, OR PUBLICATION BY ANY METHOD, IN WHOLE OR IN PART, IS PROHIBITED. TITLE TO THE PLANS AND SPECIFICATIONS REMAINS WITH THE DESIGNER, AND VISUAL CONTACT WITH THEM CONSTITUTES PRIMA FACE EVIDENCE OF THE ACCEPTANCE OF THESE RESTRICTIONS.

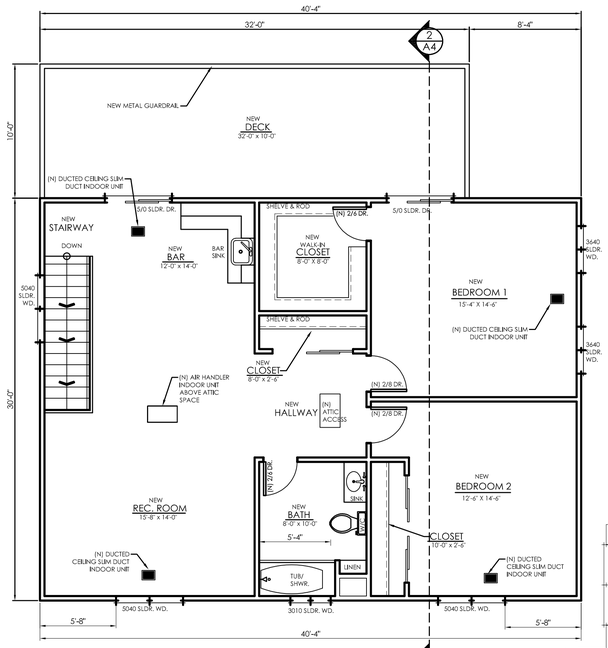

1 PROPOSED UPPER FLOOR PLAN
SCALE: 3/16"=1'-0"

LEGEND

- NEW 2X4 WALLS D.F. #2 @ 16" O.C. STUDS (U.O.N.)
- EXISTING 2X4 WALLS

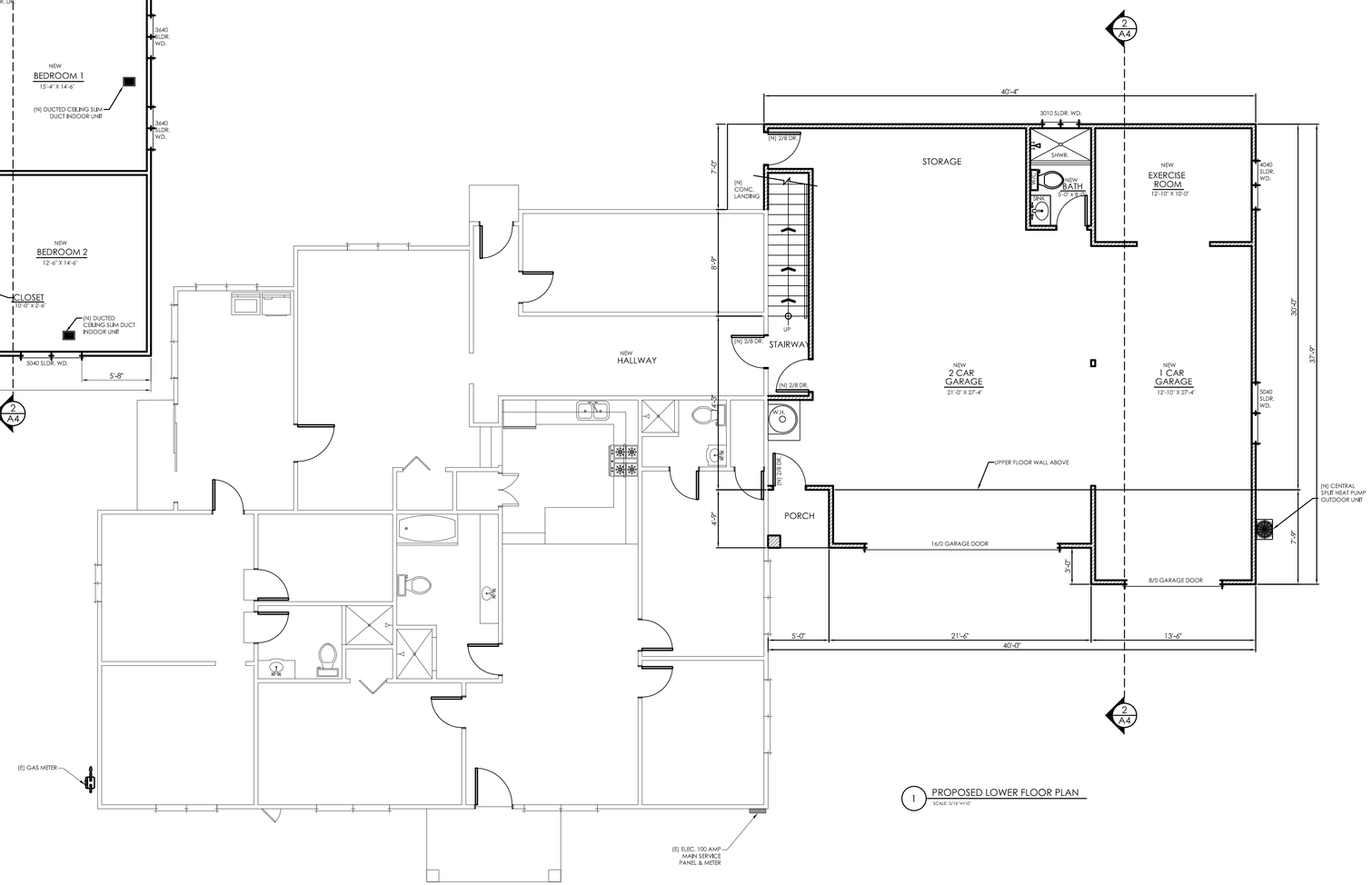

1 PROPOSED LOWER FLOOR PLAN
SCALE: 3/16"=1'-0"

E & L
BUILDING
DESIGN STUDIO
150 CAYUGA ST.
SUITE I
SALINAS, CA. 93901
O: (831)250-8069
e_ldesigns@hotmail.com

REVISION
DATE:
BY:
0

38 CLAUSEN ROAD

38 CLAUSEN ROAD
WATSONVILLE, CA. 95076
A.P.N.: 119-221-002-000

TITLE:
PROPOSED LOWER FLOOR PLAN
SCALE: 3/16" = 1'-0"

DATE:
5/22/24

JOB NUMBER:
23-54

PAGE:
A3.0

THE USE OF THESE PLANS AND SPECIFICATIONS SHALL BE RESTRICTED TO THE ORIGINAL SITE FOR WHICH THEY WERE PREPARED AND PUBLICATION THEREOF IS EXPRESSLY LIMITED TO SUCH USE. REUSE, REPRODUCTION, OR PUBLICATION BY ANY METHOD, IN WHOLE OR IN PART, IS PROHIBITED. TITLE TO THE PLANS AND SPECIFICATIONS REMAINS WITH THE DESIGNER, AND VISUAL CONTACT WITH THEM CONSTITUTES PRIMA FACE EVIDENCE OF THE ACCEPTANCE OF THESE RESTRICTIONS.

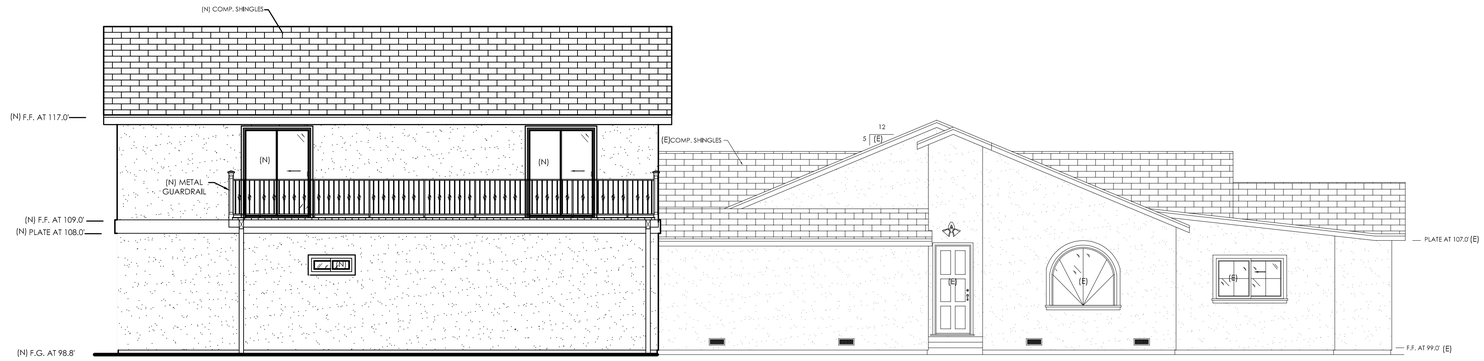

4 SOUTH ELEVATION (REAR ELEVATION)
SCALE: 3/16"=1'-0"

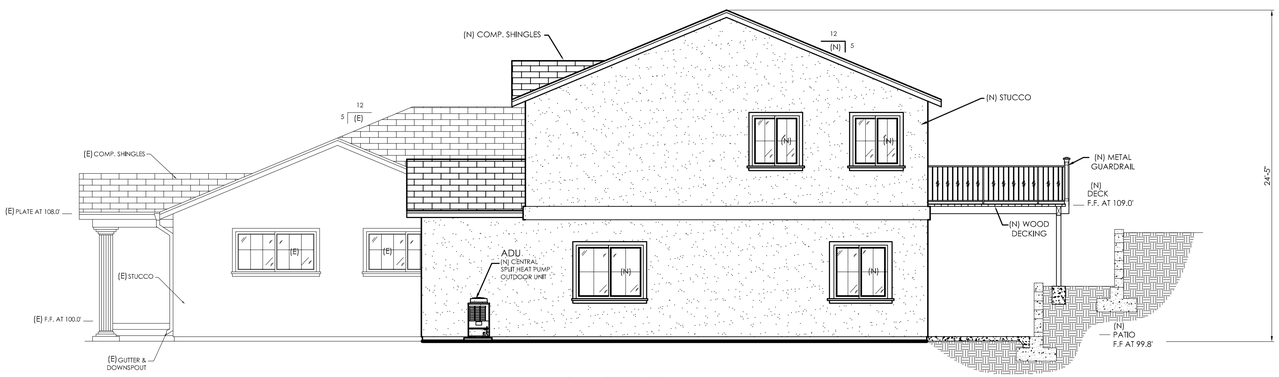

2 WEST ELEVATION (SIDE ELEVATION)
SCALE: 3/16"=1'-0"

PROPOSED Exterior Finishes	
ROOF:	TILE ROOF
ROOF PITCH:	5:12 GABLE ROOF
OVERHANG:	1'-0" EAVE, 1'-0" GABLE
FASCIA/RAKE:	2X6 PRIMED SPRUCE
GUTTER/-DOWNSPOUTS	(N) GUTTER METAL DOWNSPOUTS W/ NEW SPLASH BLOCKS
WALL:	3 COATS STUCCO
WINDOWS:	WHITE VINYL DOUBLE PANE
Exterior Colors:	
STUCCO:	TAN BROWN
ROOF:	GRAY
WINDOW:	WHITE
TRIM:	BROWM

ALL NEW MATERIALS & COLORS TO MATCH EXISTING SFD

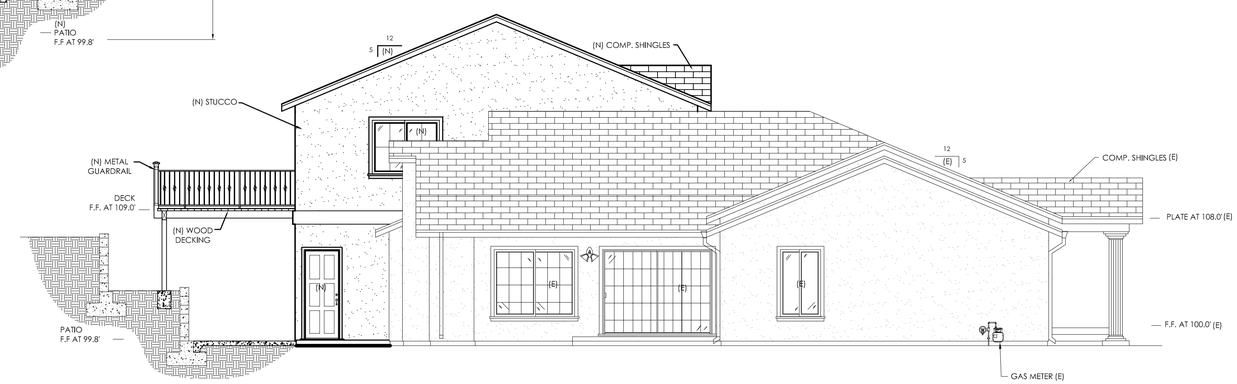

3 (SIDE ELEVATION)
SCALE: 3/16"=1'-0"

EXTERIOR LIGHTING

a. ALL EXTERIOR LIGHTING SHALL BE UNOBTRUSIVE, DOWN-LIT, HARMONIOUS WITH THE LOCAL AREA, AND CONSTRUCTED OR LOCATED SO THAT ONLY THE INTENDED AREA IS ILLUMINATED AND OFF-SITE GLARE IS FULLY CONTROLLED.
b. EXTERIOR LIGHTING SHALL HAVE RECESSED LIGHTING ELEMENTS.
c. EXTERIOR LIGHT SOURCES THAT WOULD BE DIRECTLY VISIBLE FROM WHEN VIEWED FROM A COMMON PUBLIC VIEWING AREA, AS DEFINED IN SECTION 21.06.195, ARE PROHIBITED.
d. THE APPLICANT SHALL SUBMIT THREE (3) COPIES OF EXTERIOR LIGHTING PLAN WHICH SHALL INDICATE THE LOCATION, TYPE, AND WATTAGE OF ALL LIGHT FIXTURES AND INCLUDE CATALOG SHEETS FOR EACH FIXTURE.
e. THE LIGHTING SHALL COMPLY WITH THE REQUIREMENTS OF THE CALIFORNIA ENERGY CODE SET FORTH IN CALIFORNIA CODE OF REGULATIONS TITLE 24 PART

VENTING NOTE

EACH VENT PIPE OR STACK SHALL EXTEND THROUGH ITS FLASHING AND SHALL TERMINATE VERTICALLY NOT LESS THAN 6" ABOVE THE ROOF NOR LESS THAN 1' FROM ANY VERTICAL SURFACE. CPC 906.1

1 NORTH ELEVATION (FRONT ELEVATION)
SCALE: 3/16"=1'-0"

E & L
BUILDING DESIGN STUDIO
150 CAYUGA ST. SUITE I
SALINAS, CA. 93901
O: (831)250-8069
e_ldesigns@hotmail.com

REVISION
DATE:
BY:
0

38 CLAUSEN ROAD

38 CLAUSEN ROAD
WATSONVILLE, CA. 95076
A.P.N.: 119-221-002-000

TITLE: PROPOSED ELEVATIONS
SCALE: 3/16" = 1'-0"

DATE: 5/22/24

JOB NUMBER: 23-54

PAGE: A3.1

THE USE OF THESE PLANS AND SPECIFICATIONS SHALL BE RESTRICTED TO THE ORIGINAL SITE FOR WHICH THEY WERE PREPARED AND PUBLICATION THEREOF IS EXPRESSLY LIMITED TO SUCH USE. REUSE, REPRODUCTION, OR PUBLICATION BY ANY METHOD, IN WHOLE OR IN PART, IS PROHIBITED. TITLE TO THE PLANS AND SPECIFICATIONS REMAINS WITH THE DESIGNER, AND VISUAL CONTACT WITH THEM CONSTITUTES PRIMA FACE EVIDENCE OF THE ACCEPTANCE OF THESE RESTRICTIONS.

GENERAL NOTES

1. EVERY FENESTRATION PRODUCT INSTALLED IN CONSTRUCTION SHALL HAVE ATTACHED TO IT CLEARLY VISIBLE TEMPORARY LABEL CERTIFICATE THAT LIST THE U-FACTOR, THE SOLAR HEAT GAIN COEFFICIENT OF THAT PRODUCT AND THE COMPLIANCE WITH AIR LEAKAGE NOT TO BE REMOVED BEFORE INSPECTION.
2. THE INSTALLER SHALL POST IN A CONSPICUOUS LOCATION IN THE BUILDING AN INSULATION CERTIFICATE SIGNED BY THE INSTALLER STARTING THAT THE INSTALLATION IS PER PLAN. THE CERTIFICATE SHALL STATE THE MANUFACTURE'S NAME AND MATERIAL, THE R-VALUE AND THE MINIMUM INSTALLED WEIGHT PER SQUARE FOOT.
3. WINDOWS: VINYL SLIDING OR AS INDICATED ON PLANS. WINDOW ADJACENT LESS THAN 60" ABOVE TO TUBS, SHOWERS AND TUB/SHOWER OR ADJACENT TO AND WITHIN 24" OF EITHER EDGE OF DOOR SHALL BE FULLY TEMPERED LAMINATED SAFETY GLASS OR APPROVED PLASTIC, ALL NEW EXTERIOR GLAZING SHALL BE DOUBLE PANE INSULATED GLASS AND LABELED VINYL. FRAME & PROVIDE SCREENS FOR ALL OPERABLE WINDOWS.
4. DOORS: EXTERIOR DOORS SHALL BE 1-3/8" THICK SOLID CORE. INTERIOR DOORS SHALL BE 1-3/8" THICK HOLLOW CORE, U.O.N.
5. GLAZING IN SWINGING AND SLIDING DOORS SHALL BE SAFETY GLAZING. CRC R308.4
6. INSULATION: FIBERGLASS BATT INSULATION WITH TYPE II, CLASS A, FOIL-SCRIM-KRAFT VAPOR RETARDER MEMBRANE ON ONE FACE, RESPECTIVELY, OR BLANKET TYPE.
   WALLS: R-15 SEE CF1R-PRF-01 ENERGY REPORT
   CEILINGS: R-30 SEE CF1R-PRF-01 ENERGY REPORT
7. EVERY SLEEPING ROOM SHALL HAVE AT LEAST ONE 5.7 SQUARE FOOT (5 SQ. FL. FOR GRADE FLOOR) EXTERIOR OPENING, MINIMUM OPENING HEIGHT OF 24", MINIMUM OPENING WIDTH OF 20" AND THE SILL NO MORE THAN 44" FROM THE FINISHED FLOOR FOR ESCAPE OR RESCUE. CRC SECTION R310.1
8. ALL GYP. BOARD SHALL BE 1/2" U.O.N.
9. FRAMING LUMBER SHALL BE DOUGLAS FIR #2 OR BETTER.
10. ALL INTERIOR AND EXTERIOR WALLS TO BE 2X4 STUDS TYP. U.O.N.
11. NAILING TO BE IN ACCORDANCE WITH CRC TABLE R602.3(1).
12. WALL AND CEILING FINISHES SHALL NOT HAVE A FLAME SPREAD INDEX OF GREATER THAN 200 AND NOT HAVE A SMOKE-DEVELOPED INDEX OF GREATER THAN 450. CRC R302.9.1
13. INTERIOR FINISH MATERIALS SHALL BE APPLIED OR FASTENED IN SUCH MANNER THAT THEY WILL NOT READILY BECOME DETACHED WHEN SUBJECTED TO ROOM TEMPERATURE OF 200°F FOR NOT LESS THAN 30 MINUTES. CRC R302.9.5
14. ALL DIMENSIONS TAKE PRECEDENCE OVER SCALE SHOWN ON PLANS SECTIONS, AND DETAILS..
15. APPLIANCE IN CONFINED SPACES: PROVIDE TWO OPENING INTO ENCLOSURE EACH HAVING 1 SQ. IN. PER 1000 BTU/H INPUT FREELY COMMUNICATING WITH OTHER UNCONFINED INTERIOR SPACES, MINIMUM 100 SQ. IN. EACH OPENING..
16. EVERY SPACE INTENDED FOR HUMAN OCCUPANCY SHALL BE PROVIDED WITH NATURAL LIGHT BY MEANS OF EXTERIOR GLAZED OPENINGS WITH AN AREA OF NOT LESS THAN 8% OF THE FLOOR AREA OF THE ROOM SERVED. [CRC R303.1]
17. REQUIRED NATURAL VENTILATION OF AN OCCUPIED SPACE SHALL BE THROUGH WINDOWS, DOORS, LOUVERS OR OTHER OPENINGS TO THE OUTDOORS WITH THE MINIMUM OPEN ABLE AREA BEING 4% OF THE FLOOR AREA BEING VENTILATED. SEE EXCEPTIONS FOR MECHANICAL VENTILATION. [CRC R303.1]

SPECIFICATIONS

1. BATHTUB, SHOWER UNIT, SHOWER SPACE WALL SPLASH 72" ABOVE THE FLOOR. WALLS TO RECEIVE UNIT SHALL BE PROTECTED WITH A NON-ABSORBENT SURFACE.
2. CEMENTITIOUS BACKER BOARD TO BE USED UNDER ALL TILE WORK AT ALL SHOWERS AND BATHS TO A MINIMUM HEIGHT OF 72" ABOVE THE FLOOR. MATERIAL OTHER THAN STRUCTURAL ELEMENTS TO BE NON-ABSORBENT SURFACE.
3. NET AREA OF SHOWER RECEPTOR SHALL NOT BE LESS THAN 1,024 SQ. IN (32" X 32") OF FLOOR AREA, AND BE ABLE TO ENCOMPASS A 30" DIAMETER CIRCLE. 2022 CPC SECTION 408.6
4. SHOWER DOOR SHALL OPEN SO AS TO MAINTAIN NOT LESS THAN A 22 INCH UNOBSTRUCTED OPENING FOR EGRESS. [CPC 408.5]
5. TOILET AND BATHROOM FLOORS SHALL HAVE A SMOOTH, HARD, NONABSORBENT SURFACE THAT EXTENDS UPWARD ONTO THE WALLS AT LEAST 6".
6. WASTE LINES SHALL BE A.B.S. PIPE. VENT PIPES SHALL BE P.V.C. PIPE. HOT AND COLD WATER LINES SHALL BE COPPER PIPE. TYPE "L" UNDERGROUND AND TYPE "M" ABOVE GROUND. AND HOSE BIBS SHALL BE 3/4" DIAMETER BRASS. 2022 CPC TABLE 701.2
7. PROVIDE PRESSURE VALVE OR MIXING VALVE TO LIMIT WATER TEMPERATURE TO 120 DEGREES F. AT TUBS AND SHOWERS.
8. ALL HOT WATER PIPING IN UNHEATED AREAS SHALL BE INSULATED WITH MINIMUM R-3 INSULATION. INSULATE ALL SUPPLY PIPING NOT INSIDE BUILDING INSULATION ENVELOPE.
9. ALL HOT WATER PIPING BURIED BELOW GRADE MUST BE INSTALLED IN A WATER PROOF AND NON-CRUSHABLE CASING OR SLEEVE.
10. BASE MATERIAL BENEATH SHOWER PANS SHALL BE SLOPED TO DRAIN.
11. AT ALL INTERCONNECTIONS BETWEEN CONCEALED VERTICAL STUD WALL OR PARTITION SPACES AND CONCEALED SHOWER STALLS SHALL HAVE A CLEAR INTERIOR FINISH AREA OF 7.1 SQ.FT. AND BE ABLE TO ACCOMMODATE A MINIMUM 30 INCH CIRCLE AT THE THRESHOLD LEVEL. THESE CLEARANCES SHALL BE MAINTAINED UP TO A HEIGHT OF 70" ABOVE SHOWER DRAIN. (CPC 408.6)
12. THE MAXIMUM HOT WATER TEMPERATURE DISCHARGING FROM THE BATHTUB AND WHIRLPOOL BATHTUB FILLER SHALL BE LIMITED TO 120 DEGREES FAHRENHEIT BY A DEVICE THAT IS IN ACCORDANCE WITH ASSE 1070 OR CSA B125.3. THE WATER HEATER THERMOSTAT SHALL NOT BE CONSIDERED A CONTROL FOR MEETING THIS PROVISION. (CPC 409.4)
13. ALL HOT WATER FAUCETS THAT HAVE MORE THAN 10' OF PIPE BETWEEN THE FAUCET AND THE HOT WATER HEATER SERVING SUCH FAUCET SHALL BE EQUIPPED WITH A HOT WATER RECIRCULATING SYSTEM.
14. NON-REMOVABLE BACK FLOW PREVENTION DEVICE AT HOSE BIBS:
15. PROVIDE ACCESS PANEL (12"X12" MIN.) OR UTILITY SPACE FOR ALL PLUMBING FIXTURES HAVING CONCEALED SLIP-JOINT CONNECTIONS.CPC 2022 SECTION 402.10
16. CONTROL VALVES AND SHOWERHEADS SHALL BE LOCATED ON THE SIDEWALL OF SHOWER COMPARTMENTS OR BE OTHERWISE ARRANGED SO THAT THE SHOWERHEAD DOES NOT DISCHARGE DIRECTLY AT THE ENTRANCE TO THE COMPARTMENT AND THE BATHER CAN ADJUST THE VALVES PRIOR TO STEPPING INTO THE SHOWER SPRAY. (CPC 411.10)
17. VENTS SHALL TERMINATE ABOVE THE ROOF SURFACE AT A LISTED CAP OR LISTED ROOF ASSEMBLY. 2022 CPC SECTION 510.6.2(1)
18. EMERGENCY EGRESS REQUIREMENTS FROM SLEEPING ROOMS: [CRC R310.1]

a) MINIMUM NET CLEAR OPENING DIMENSION OF 24 INCHES IN HEIGHT.
b) MINIMUM NET CLEAR OPENING DIMENSION 20 INCHES IN WIDTH.
c) MINIMUM NET CLEAR OPENING DIMENSION OF 5.0 SQUARE FEET IN AREA FOR GRADE FLOOR OPENINGS.
d) OPENINGS SHALL HAVE THE BOTTOM OF THE CLEAR OPENING NOT GREATER THAN 44 INCHES MEASURED FROM THE FLOOR.

TANKLESS WATER HEATER NOTES

1. NEW TANKLESS WATER HEATER WITH A GAS SUPPLY LINE WITH A CAPACITY OF TO PROVIDE AT LEAST 200,000 BTU/HR. A 120V ELECTRICAL RECEPTACLE THAT IS WITHIN THREE FEET OF THE WATER HEATER AND ACCESSIBLE TO THE WATER HEATER WITH NO OBSTRUCTIONS; AND LIGHTING FIXTURE. A CATEGORY III OR IV VENT, OR A TYPE B VENT WITH STRAIGHT PIPE BETWEEN THE OUTSIDE TERMINATION AND THE SPACE WHERE THE WATER HEATER IS INSTALLED. A CONDENSATE DRAIN THAT IS NO MORE THAN 2 INCHES HIGHER THAN THE BASE OF THE INSTALLED WATER HEATER, AND ALLOWS NATURAL DRAINING WITHOUT PUMP ASSISTANCE.
2. ALL NEW HOT WATER PIPING FROM THE KITCHEN TO THE TANKLESS WATER HEATER AND ALL OTHER NEW HOT WATER PIPING MUST BE INSULATED PER CEC STANDARDS
3. THE TANKLESS WATER HEATER MUST BE PROVIDED WITH A TEMPERATURE AND PRESSURE RELIEF VALVE HAVING A FULL SIZED DRAIN OF GALVANIZED STEEL OR HARD DRAWN COPPER TO THE OUTSIDE OF THE BUILDING WITH THE END OF THE PIPE NOR MORE THAN 2 FEET OR LESS THAN 6" ABOVE THE GRADE POINTING DOWNWARD, THE TERMINAL END BEING UNTHREADED.
4. TANKLESS WATER HEATERS SHALL HAVE A 120V ELECTRICAL RECEPTACLE THAT IS WITHIN THREE FEET OF THE WATER HEATER AND ACCESSIBLE TO THE WATER HEATER WITH NO OBSTRUCTIONS; AND LIGHTING FIXTURE.
5. TANKLESS WATER HEATERS SHALL HAVE A CATEGORY 3 OR 4 VENT , OR A TYPE B VENT WITH STRAIGHT PIPE BETWEEN THE OUTSIDE TERMINATION AND THE SPACE WHERE THE WATER HEATER IS INSTALLED.
6. TANKLESS WATER HEATERS TO HAVE A CONDENSATION DRAIN THAT IS NO MORE THAN 2 INCHES HIGHER THAN THE BASE OF THE INSTALLED WATER HEATER AND ALLOWS NATURAL DRAINING WITHOUT PUMP ASSISTANCE.

KEY NOTES

31 TUB SHOWERHEADS SHALL HAVE A MAXIMUM CAPACITY OF 1.8 GPM @ 80 PSI. CONTROL VALVES AND SHOWERHEADS SHALL BE LOCATED ON THE SIDES ALL OF SHOWER COMPARTMENTS OR OTHERWISE ARRANGED SO THAT THE SHOWER HEAD DOES NOT DISCHARGE DIRECTLY AT THE ENTRANCE TO THE COMPARTMENT SO THAT THE BATHER CAN ADJUST THE VALVE PRIOR TO STEPPING INTO THE SHOWER.

22 HINGED SHOWER DOORS SHALL BE TEMPERED 1/2" THICK SAFETY GLASS AND OPEN OUTWARD.

23 TUB/SHOWER DOOR SHALL OPEN SO AS TO MAINTAIN NOT LESS THAN A 22 INCH UNOBSTRUCTED OPENING FOR EGRESS. 2022 CPC SECTION 408.5.

24 NET AREA OF SHOWER RECEPTOR SHALL NOT BE LESS THAN 1,024 SQ. IN (32" X 32") OF FLOOR AREA, AND SHALL HAVE MINIMUM AREA CAPABLE OF ENCOMPASSING A 30" CIRCLE. PER 2022 CPC SECTION 408.6.

25 TOILETS SHALL BE ULTRA LOW-FLOW WITH A MAXIMUM FLUSH CAPACITY OF 1.28 GALLONS.

26 TOILET SPACES SHALL BE AT LEAST 30" WIDE, WITH AT LEAST 24" CLEAR IN FRONT OF WATER CLOSET.

27 LAVATORY & SINK FAUCETS SHALL HAVE A MAXIMUM FLOW RATE CAPACITY NOT TO EXCEED 1.2 GPM @ 60 PSI.2022 CPC 407.2.2. THE MAXIMUM FLOW RATE OF KITCHEN FAUCETS SHALL NOT EXCEED 1.8 GPM AT 60 PSI. 2022 CGBC 4.303.1.4.4

28 UPPER CABINETS

29 LOWER CABINETS

10 LEFT BLANK INTENTIONALLY

11 LEFT BLANK INTENTIONALLY

12 LEFT BLANK INTENTIONALLY

13 LEFT BLANK INTENTIONALLY

14 LEFT BLANK INTENTIONALLY

15 LEFT BLANK INTENTIONALLY

16 LEFT BLANK INTENTIONALLY

17 LEFT BLANK INTENTIONALLY

18 A PERMANENT SWITCH CONTROLLED LIGHTING FIXTURE SHALL BE INSTALLED FOR MAINTENANCE OF EQUIPMENT IS REQUIRED AND SHALL BE ACCESSIBLE. SUCH FIXTURE SHALL PROVIDE SUFFICIENT ILLUMINATION TO SAFELY APPROACH THE EQUIPMETN AND PERFORM THE TASKS FOR WHICH ACCESS IS PROVIDED. CONTROL OF THE LIGHTING SHALL BE PROVIDED AT THE ACCESS ENTRANCE. (CEC 210.70)

19 AN ATTIC IN WHICH AN APPLIANCE IS INSTALLED SHALL BE ACCESSIBLE THROUGH AN OPENING AND PASSAGEWAY NOT LESS THAN THE LARGEST COMPONENT OF THE APPLIANCE, AND NOT LESS THAN 22 INCHES BY 30 INCHES. (CMC 304.4.1)

20 WHERE THE HEIGHT OF THE PASSAGEWAY IS LESS THAN 6', THE DISTANCE FROM THE PASSAGEWAY ACCESS TO THE APPLIANCE SHALL NOT EXCEED 20' MEASURED ALONG THE CENTER LINE OF THE PASSAGEWAY. (CMC 304.4.1)

21 SHELVE & ROD

22 WIDTH 30 X DEPTH 36" CLEAR FLOOR SPACE FOR NEW ELEC. PANEL. 2022 CEC 110.26(A)(1) & (2)

23 CONCRETE LANDINGS SHALL BE AT THE SAME ELEVATION ON EACH SIDE OF AN EGRESS/EXTERIOR DOOR, EXCEPT FOR EXTERIOR LANDINGS WHICH ARE PERMITTED TO HAVE A SLOPE NOT TO EXCEED 2%. 2022 CRC SECTION R311.3 LANDINGS SHALL NOT BE MORE THAN 1 $\frac{1}{2}$" LOWER THAN THE TOP OF THE THRESHOLD(EXECPTION: THE EXTERIOR LANDING OR FLOOR SHALL NOT BE MORE THAN 7 $\frac{3}{4}$" BELOW THE TOP OF THE THRESHOLD PROVIDED THE DOOR DOES NOT SWING OVER THE LANDING). SHOW ON PLANS AND PROVIDE DETAIL. 2022 CRC R311.3.1

24 NEW UNIT SECURELY FASTENED IN PLACE. 2022 CMC SEC. 303.4 PROVIDE RECEPTACLE ADJACENT TO HEATING EQUIPMENT. 2022 CMC 904.2.5 SEE SHEET EN1 & EN2 FOR SIZING

25 NEW UNIT SECURELY FASTENED IN PLACE. 2022 CMC SEC. 303.4 SEE SHEET EN1 & EN2 FOR SIZING

26 ENCLOSED CEILINGS A READILY ACCESSIBLE ATTIC ACCESS, MIN. 22"X30", LOCATED WHERE AT LEAST 30" CLEAR HEAD ROOM OCCURS AND ATTIC SPACE EXCEEDS 30 SQ. FT. CRC R807.1

27 SPACE AT LEAST 2.5FT X 2.5FT X 7FT TALL FOR A FUTURE HEAT PUMP WATER HEATER (CENC SECTION 150.0(N)

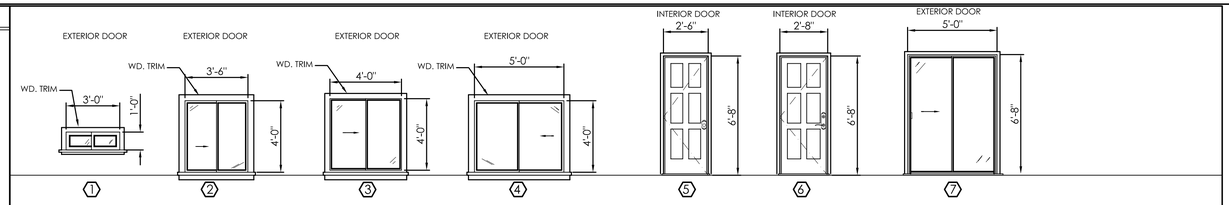

DOOR & WINDOW SCHEDULE

#	QTY.	SIZE	TYPE	OPERATE	LOCATION	U-FACTOR	SHGC	DESCRIPTION	SPECIFICATIONS
1	2	3'-0"X 1'-0"	VINYL DOUBLE PANE TEMPERED	SLIDER WINDOW	BATHROOM	0.30	0.50	INSECT SCREEN	SEE BUILDING ENERGY ANALYSIS REPORT CF 1R-PRF-01
2	2	3'-6"X 4'-0"	VINYL DOUBLE PANE	SLIDER WINDOW	BEDROOM	0.30	0.50	INSECT SCREEN	SEE BUILDING ENERGY ANALYSIS REPORT CF 1R-PRF-01
3	1	4'-0"X 4'-0"	VINYL DOUBLE PANE	SLIDER WINDOW	EXERCISE ROOM	0.30	0.50	INSECT SCREEN	SEE BUILDING ENERGY ANALYSIS REPORT CF 1R-PRF-01
4	4	5'-0"X 4'-0"	VINYL DOUBLE PANE	SLIDER WINDOW	LIVING, BEDROOM	0.30	0.50	INSECT SCREEN	SEE BUILDING ENERGY ANALYSIS REPORT CF 1R-PRF-01
5	3	2'-6"X 6'-8"	SINGLE DOOR	INTERIOR	BATHROOM, CLOSET			HOLLOW DOOR	2" FINISH WD. TRIM ALL AROUND
6	6	2'-8"X 6'-8"	SINGLE DOOR	INTERIOR	PORCH, STORAGE, HALLWAY, BEDROOM			HOLLOW DOOR	2" FINISH WD. TRIM ALL AROUND
7	2	5'-0"X 6'-8"	SLIDER DOOR	EXTERIOR	REC. ROOM, BEDROOM	0.50	0.50	SOLID DOOR	SEE BUILDING ENERGY ANALYSIS REPORT CF 1R-PRF-01

LIGHT AND VENTILATION SECTION R303

1. EVERY SPACE INTENDED FOR HUMAN OCCUPANCY SHALL BE PROVIDED WITH NATURAL LIGHT BY MEANS OF EXTERIOR GLAZED OPENINGS WITH AN AREA OF NOT LESS THAN 8% OF THE FLOOR AREA OF THE ROOM SERVED. [CRC R303.1]

LIGHT SQ. FT. 524
8% X 524 = 41.92

REQUIRED	42
OPENINGS	SQ.FT.
3- 5040 WD.	20
4- 5040 WD.	20
7- 5/0 DR.	33.5
PROVIDED	73.5

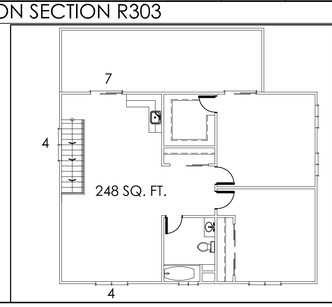

ADDITION

2. REQUIRED NATURAL VENTILATION OF AN OCCUPIED SPACE SHALL BE THROUGH WINDOWS, DOORS, LOUVERS OR OTHER OPENINGS TO THE OUTDOORS WITH THE MINIMUM OPEN ABLE AREA BEING 4% OF THE FLOOR AREA BEING VENTILATED. SEE EXCEPTIONS FOR MECHANICAL VENTILATION. [CRC R303.1]

VENTILATION SQ. FT. 524
4% X 524 = 20.96

REQUIRED	21
OPENINGS	SQ.FT.
3- 5040 WD.	10
4- 5040 WD.	10
7- 5/0 DR.	16.75
PROVIDED	36.75

CAL GREEN NOTES

1. THE CAL-GREEN MANDATORY REQUIREMENTS ARE LOCATED ON SHEET GB. 1

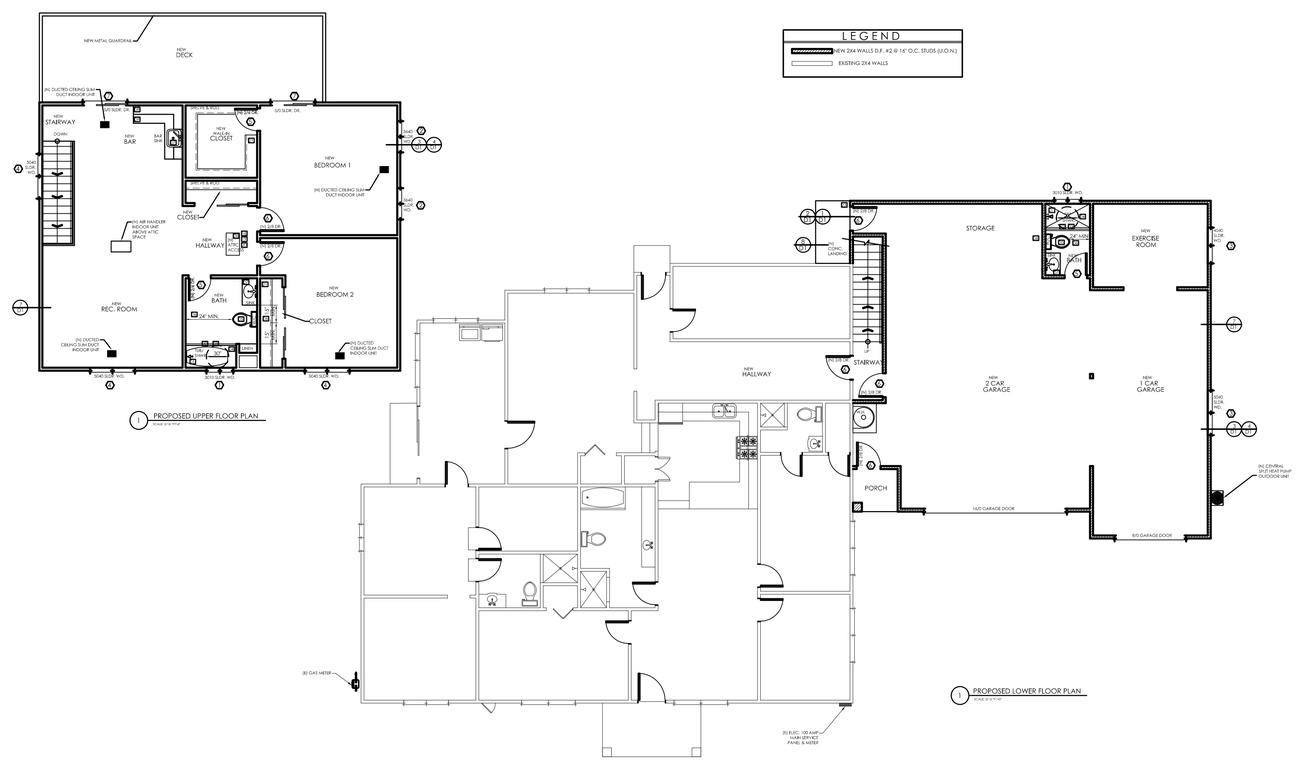

E & L
BUILDING DESIGN STUDIO
150 CAYUGA ST. SUITE I
SALINAS, CA. 93901
O: (831)250-8069
e_ldesigns@hotmail.com

REVISION
DATE:
BY:
0

38 CLAUSEN ROAD

38 CLAUSEN ROAD
WATSONVILLE, CA. 95076
A.P.N.: 119-221-002-000

TITLE: CODE COMPLIANCE

SCALE: N.T.S.

DATE: 5/22/24

JOB NUMBER: 23-54

PAGE: A4

THE USE OF THESE PLANS AND SPECIFICATIONS SHALL BE RESTRICTED TO THE ORIGINAL SITE FOR WHICH THEY WERE PREPARED AND PUBLICATION THEREOF IS EXPRESSLY LIMITED TO SUCH USE. REUSE, REPRODUCTION, OR PUBLICATION BY ANY METHOD, IN WHOLE OR IN PART, IS PROHIBITED. TITLE TO THE PLANS AND SPECIFICATIONS REMAINS WITH THE DESIGNER, AND VISUAL CONTACT WITH THEM CONSTITUTES PRIMA FACE EVIDENCE OF THE ACCEPTANCE OF THESE RESTRICTIONS.

TRUSS NOTES

1. NEW PRE-MANUFACTURED, PRE-ENGINEERED ROOF TRUSSES @ 2'-0" O.C. CONTRACTOR TO SUBMIT CALC'S AND DRAWINGS FOR APPROVAL PRIOR TO INSTALLATION: FIRST TO BLDG. DESIGNER/ARCHITECT/ENGINEER OF RECORD FOR OVERALL DESIGN APPROVAL AND THEN SUBMIT TO THE CITY OF SALINAS BUILDING DEPARTMENT.
2. INSTALLATION OF ROOF COVERING PER MANUFACTURER SPECIFICATIONS.
3. ROOF TRUSS COMPANIES TO BE RESPONSIBLE TO MATCH EXISTING AND OR NEW ROOF PITCH
4. (MUST BE REVIEWED & APPROVED BY DESIGNER PRIOR TO SUBMITTAL TO CITY OF SALINAS).
5. PRE-FABRICATED WOOD TRUSSES INCLUDE PLANS STRUCTURAL UNITS CONSISTING OF METAL PLATE CONNECTED MEMBERS WHICH ARE FABRICATED FROM DIMENSION LUMBER AND WHICH HAVE BEEN CUT AND ASSEMBLED PRIOR TO DELIVERY TO THE PROJECT SITE.
6. TRUSSES SHALL BE FABRICATED WITH WOOD CHORDS AND WEBS OF ADEQUATE STRENGTH FOR THE DESIGN LOADS.
7. ALL CONNECTOR PLATES SHALL BE A MINIMUM OF 0.036" IN THICKNESS AND MANUFACTURED FROM STEEL MEETING THE REQUIREMENTS OF ASTM A446 GARDE A, AND SHALL BE HOT DIP GALVANIZED PER ASTM A525. COATING DESIGNATION G60.
8. THE TRUSS DESIGN SHALL CONFORM TO ALL APPLICABLE PROVISIONS OF THE NATIONAL DESIGN SPECIFICATION OF OR WOOD CONSTRUCTION@ AND THE DESIGN SPECIFICATION FOR METAL PLATE CONNECTED TRUSSES@ PUBLISHED BY THE TRUSS PLATE INSTITUTE.
9. THE TRUSS MANUFACTURER SHALL PROVIDE INSTALLATION PLANS SHOWING THE LOCATION AND CONFIGURATION OF ALL TRUSSES AND BRACING.
10. THE MANUFACTURER SHALL PROVIDE FOUR (4) SETS OF DRAWINGS AND STRUCTURAL CALCULATIONS BEARING THE SEAL AND SIGNATURE OF THE RESPONSIBLE ENGINEER FOR APPROVAL PRIOR TO FABRICATION.
11. ROOF TRUSSES: PRE-ENGINEERED, PRE-MANUFACTURED WOOD FRAMED UNITS AT 24" O.C. CONTRACTOR TO SUBMIT DESIGN AND CALCULATIONS TO BUILDING DEPARTMENT FOR APPROVAL PRIOR TO FABRICATION.

GENERAL REQUIREMENTS

1. ALL STRUCTURAL WOODWORK SHALL BE DONE IN ACCORDANCE WITH THE PROVISIONS OF THE CRC.
2. ALL LUMBER SHALL BE DOUGLAS FIR-LARCH OF #2 GRADE, UNLESS OTHERWISE NOTED ON PLANS.
3. NAILING: COMMON WIRE NAILS, GALVANIZED WHERE EXPOSED TO THE EXTERIOR. SIZE AND SPACING OF NAILS SHALL CONFORM TO TABLE R602.3(1) OF THE C.R.C.
4. ALL FRAMING CLIPS, ANGLES, POST CAPS, BASES, ETC., SHALL BE AS MANUFACTURED BY A SIMPSON STRONG TIE CO@.; OR EQUAL AND GALVANIZED WHERE EXPOSED TO THE EXTERIOR.
5. ALL WOOD MEMBERS EXPOSED TO WEATHER SHALL BE PRESSURE TREATED
6. ALL HEADERS TO BE 4X12 D.F. #2 (U.O.N.)

ROOF NOTES

1. INSTALLATION OF ROOFING SHALL BE IN ACCORDANCE WITH MANUFACTURER'S SPECIFICATIONS.
2. ROOFING: ASPHALT COMPOSITE SHINGLES MINIMUM CLASS A .
3. FULL UNDERLAYMENT SHALL BE NO. 40X36" WIDE ASPHALT-SATURATED FIBERGLASS ROOFING FELT, COMPLYING WITH ASTM D-4601, TYPE II, OR FIBERGLASS BASE MINERAL SURFACE CAP SHEET COMPLYING WITH ASTM D-3909 AND AN INTERLAYMENT OF NO. 30X18"
4. PLYWD. SHTG.: 5/8" CDX PLY. SHTG. GR. & A.C.X GR. WITH "A" FACE EXPOSED TO WEATHER NAIL WITH 8d NAILS AT 6" O.C. EDGES, 12" O.C. FIELD
5. ROOF SLOPE: NEW 4 IN 12
6. FLASHING: ALL ROOF VALLEYS AND ROOF PENETRATIONS TO BE FLASHED WITH 26 GA. GALVANIZED SHEET METAL. PER CRC SECTION R337.5.4
7. ROOF CONSTRUCTION SHALL BE MINIMUM CLASS A, OR AS APPROVED BY THE REVIEWING AUTHORITY. THIS REQUIREMENT SHALL APPLY TO ALL NEW CONSTRUCTION AND/OR REPAIRS THAT EFFECT 50 PERCENT OR MORE OF AN EXISTING ROOF.
8. PROVIDE DRAFT STOPS.
9. ALL ROOF FASTENERS TO BE CAPABLE OF RESISTING WIND LOAD OF NOT LESS THAN 110 M.P.H.- INSTALL PER MANF. WRITTEN INSTRUCTION.
10. IN "CALIFORNIA" DOUBLE FRAMING AREAS PROVIDE OPENINGS INTO MAIN ATTIC SPACE FOR ADEQUATE VENTILATION. IF "CLIFORNIA" DOUBLE FRAME AREA HAS MORE THAN 30" HEADROOM PROVIDE A 22"X30" ACCESS THOUGH MAIN ROOF SHEATHING.
11. ALL BOX COLUMNS AND 'POP-OUTS' SHALL REMAIN OPEN AT TOP PLATE LINE TO ALLOW FOR VENTILATION.
12. TWO LAYERS UNDERLAYMENT PER CRC TABLE R905.1.1(2) & SECTION R905.2

ATTIC VENTILATION CALC'S

THE REQUIRED VENTILATION AREA RATIO IS 1/150 OF ATTIC AREA, EXCEPT THAT REDUCTION OF THE TOTAL AREA TO 1/300 IS PERMITTED PROVIDED THAT AT LEAST 50% AND NOT MORE THAN 80% OF THE VENTILATION AREA IS PROVIDED BY VENTILATORS LOCATED 3' ABOVE EAVE OR CORNICE VENTS CRC SECTION R806.2

REQUIRED VENTILATION (ROOF AREA 1)

ATTIC AREA TO BE VENTILATED : = 1210 SQ. FT.
VENTILATED AREA REQUIRED = (1 / 150 ATTIC AREA)
1210 SQ. FT. / 150 = 8.06 SQ. FT. OF VENT
VENT SIZE (eave vent) 3.5 x 22.5" / 144 = 0.54 SQ. FT.
VENT SIZE (gable end vent) 1.66' x 1.66' = 2.75 SQ. FT.
8.06 / 0.54 = 14.9 VENTS REQUIRED
VENTS PROVIDED =15 EAVE VENTS

VENTILATION OPENINGS: EAVE VENTS SEE SHEET D3 DETAIL #4
VENTILATION DIMENSION OF THE OPENINGS TO HAVE 1/6" MINIMUM AND 1/4" MAXIMUM COROSSION RESISTANT WIRE MESH SCREENING. CRC SECTION R327.6

LEGEND

- (N) WALLS
- NEW GUTTERS
- NEW DOWNSPOUTS WITH SPLASH BLOCKS (5/D3)
- SLOPE DIRECTION ARROW
- NEW ROOF LINE
- (N)EAVE VENTS (4/D3)

GENERAL NOTES

1. A CLASS "A' ROOF COVERING IS REQUIRED. R902.1 CRC
2. EXTERIOR WALL COVERING OR WALL ASSEMBLY SHALL BE APPROVED NONCOMBUSTIBLE MATERIAL, IGNITION-RESISTANT MATERIAL, HEAVY TIMBER, LOG WALL CONSTRUCTION OR SHALL MEET THE PERFORMANCE CRITERIA OF STANDARD SFM 12-7A-1 FOR 10 MINUTE DIRECT FLAME CONTACT EXPOSURE TEST. [§R337.7.3 CRC]

CAL GREEN NOTES

THE CAL-GREEN MANDATORY REQUIREMENTS ARE LOCATED ON SHEET GB. 1

NOTE:
SEE FASTENER SCHEDULE ON SHEET A6

SPECIFICATIONS

ROOF SHEATING:
1. 5/8" CDX PLY. SHTG. GR. & A.C.X GR. AT EXPOSED OVERHANG W/"A" FACE EXPOSED NAIL WITH 8d NAILS AT 6" O.C. EDGES, 12" O.C. FIELD

ROOF FRAMING:
1. ALL ROOF VALLEYS AND ROOF PENETRATIONS TO BE FLASHED WITH 26 GA. G.I. SHEET METAL

2022 CRC TABLE R803.1

VENTING NOTES

EACH VENT PIPE OR STACK SHALL EXTEND THROUGH ITS FLASHING AND SHALL TERMINATE VERTICALLY NOT LESS THAN 6" ABOVE THE ROOF NOR LESS THAN 1' FROM ANY VERTICAL SURFACE. CPC 906.1

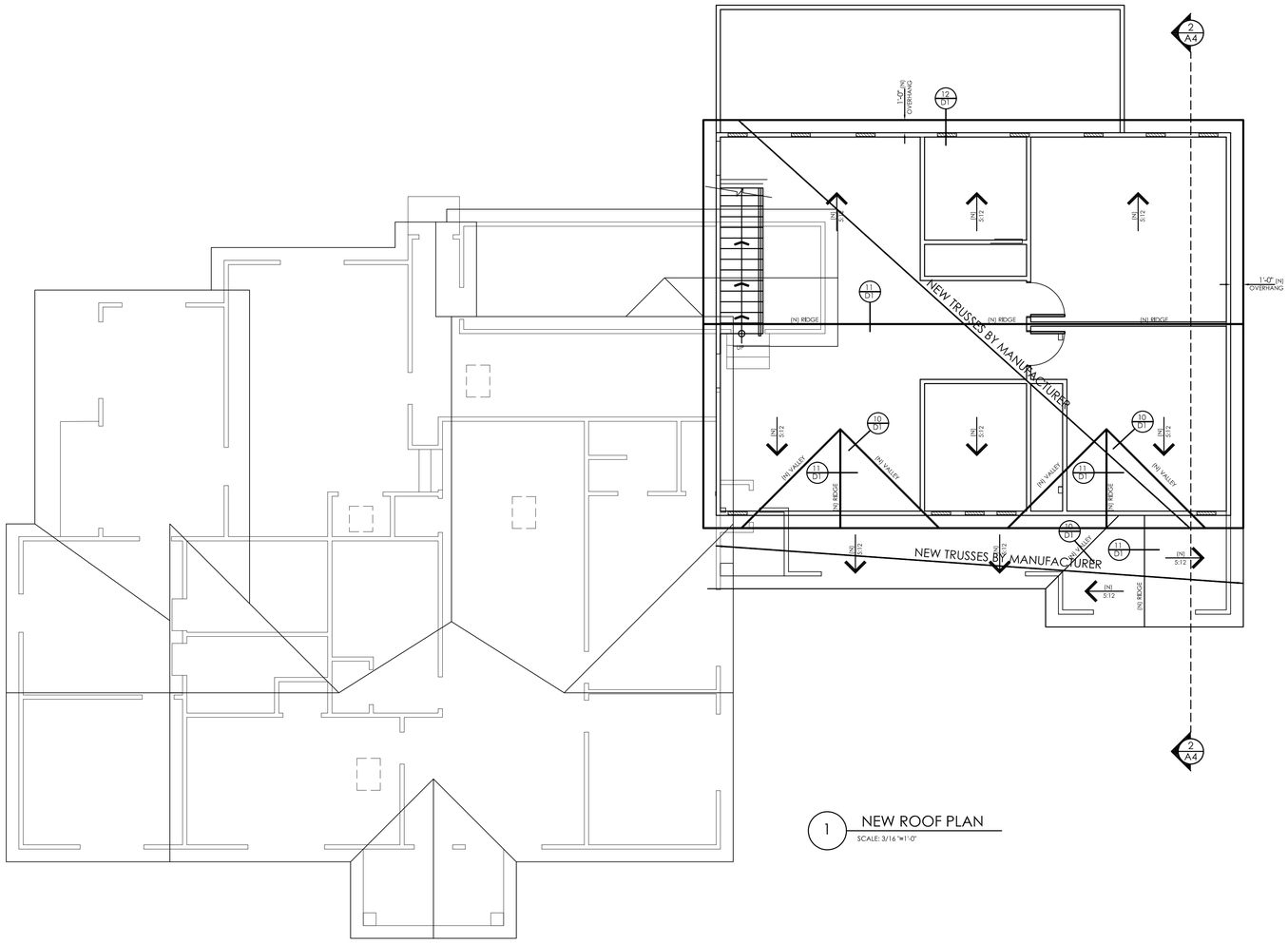

1 NEW ROOF PLAN
SCALE: 3/16"=1'-0"

E & L
BUILDING DESIGN STUDIO
150 CAYUGA ST. SUITE I
SALINAS, CA. 93901
O: (831)250-8069
e_ldesigns@hotmail.com

REVISION
DATE:
BY:
0

38 CLAUSEN ROAD

38 CLAUSEN ROAD
WATSONVILLE, CA. 95076
A.P.N.: 119-221-002-000

TITLE: ROOF PLAN
SCALE: 3/16" = 1'-0"

DATE: 5/22/24

JOB NUMBER: 23-54

PAGE: A5

THE USE OF THESE PLANS AND SPECIFICATIONS SHALL BE RESTRICTED TO THE ORIGINAL SITE FOR WHICH THEY WERE PREPARED AND PUBLICATION THEREOF IS EXPRESSLY LIMITED TO SUCH USE. REUSE, REPRODUCTION, OR PUBLICATION BY ANY METHOD, IN WHOLE OR IN PART, IS PROHIBITED. TITLE TO THE PLANS AND SPECIFICATIONS REMAINS WITH THE DESIGNER, AND VISUAL CONTACT WITH THEM CONSTITUTES PRIMA FACE EVIDENCE OF THE ACCEPTANCE OF THESE RESTRICTIONS.

ITEM	DESCRIPTION OF BUILDING ELEMENTS	NUMBER AND TYPE OF FASTENER[a, b, e]	SPACING AND LOCATION
Roof			
1	Blocking between ceiling joists, rafters or trusses to top plate or other framing below	4-8d box ($2\frac{1}{2}$" × 0.113"); or 3-8d common ($2\frac{1}{2}$" × 0.131"); or 3-10d box (3" × 0.128"); or 3-3" × 0.131" nails	Toe nail
	Blocking between rafters or trusses not at the wall top plate, to rafter or truss	2-8d common ($2\frac{1}{2}$" × 0.131"); or 3-3" × 0.131" nails	Blockend toe nail
		2-16d common ($3\frac{1}{2}$" × 0.162"); or 3-3" × 0.131" nails	End nail
	Flat blocking to truss and wide filler	16d common ($3\frac{1}{2}$" × 0.162"); or 3" × 0.131" nails	6" o.c. face nail
2	Ceiling joists to top plate	4-8d box ($2\frac{1}{2}$" × 0.113"); or 3-8d common ($2\frac{1}{2}$" × 0.131"); or 3-10d box (3" × 0.128"); or 3-3" × 0.131" nails	Per joist, toe nail
3	Ceiling joist not attached to parallel rafter, laps over partitions (see Section R602.3.3 and Table R602.3(1))	4-10d box (3" × 0.128"); or 3-10d common ($3\frac{1}{2}$" × 0.162"); or 4-3" × 0.131" nails	Face nail
4	Ceiling joist attached to parallel rafter (heel joint) (see Section R602.3.2 and Table R602.3(1))	Table R602.3(1)	Face nail
5	Collar tie to rafter, face nail	4-10d box (3" × 0.128"); or 3-10d common (3" × 0.148"); or 4-3" × 0.131" nails	Face nail each rafter
6	Rafter or roof truss to plate	3-16d box ($3\frac{1}{2}$" × 0.135"); or 3-10d common (3" × 0.148"); or 4-10d box (3" × 0.128"); or 4-3" × 0.131" nails	2 toe nails on one side and 1 toe nail on opposite side of each rafter or truss
7	Roof rafters to ridge, valley or hip rafters or roof rafter to minimum 2" ridge board	4-16d box ($3\frac{1}{2}$" × 0.135"); or 3-10d common (3" × 0.148"); or 4-10d box (3" × 0.128"); or 4-3" × 0.131" nails	Toe nail
		3-10d box ($3\frac{1}{2}$" × 0.128"); or 2-10d common ($3\frac{1}{2}$" × 0.162"); or 3-10d box (3" × 0.128"); or 3-3" × 0.131" nails	End nail
Wall			
8	Stud to stud (not at braced wall panels)	16d common ($3\frac{1}{2}$" × 0.162")	24" o.c. face nail
		10d box (3" × 0.128") or 3" × 0.131" nails	16" o.c. face nail
9	Stud to stud and abutting studs at intersecting wall corners (at braced wall panels)	16d box ($3\frac{1}{2}$" × 0.135"); or 3" × 0.131" nails	12" o.c. face nail
		16d common ($3\frac{1}{2}$" × 0.162")	16" o.c. face nail
10	Built-up header (2" to 2" header with $\frac{1}{2}$" spacer)	16d common ($3\frac{1}{2}$" × 0.162")	16" o.c. each edge face nail
		16d box ($3\frac{1}{2}$" × 0.135")	12" o.c. each edge face nail
11	Continuous header to stud	5-8d box ($2\frac{1}{2}$" × 0.113"); or 4-8d common ($2\frac{1}{2}$" × 0.131"); or 4-10d box (3" × 0.128")	Toe nail
12	Adjacent full height stud to end of header	4-16d box ($3\frac{1}{2}$" × 0.135"); or 3-16d common ($3\frac{1}{2}$" × 0.162"); or 4-10d box (3" × 0.128"); or 4-3" × 0.131" nails	End nail
13	Top plate to top plate	10d common ($3\frac{1}{2}$" × 0.162")	16" o.c. face nail
		10d box (3" × 0.128") or 3" × 0.131" nails	12" o.c. face nail
14	Double top plate splice	8-16d common ($3\frac{1}{2}$" × 0.162"); or 12-16d box ($3\frac{1}{2}$" × 0.135"); or 12-10d box (3" × 0.128"); or 12-3" × 0.131" nails	Face nail on each side of end joint (minimum 24" lap splice length each side of end joint)
15	Bottom plate to joist, rim joist, band joist or blocking (not at braced wall panels)	16d common ($3\frac{1}{2}$" × 0.162")	16" o.c. face nail
		16d box ($3\frac{1}{2}$" × 0.135") or 3" × 0.131" nails	12" o.c. face nail
Roof			
16	Bottom plate to joist, rim joist, band joist or blocking (at braced wall panels)	3-16d box ($3\frac{1}{2}$" × 0.135"); or 2-16d common ($3\frac{1}{2}$" × 0.162"); or 4-3" × 0.131" nails	16" o.c. face nail
17	Top or bottom plate to stud	4-8d box ($2\frac{1}{2}$" × 0.113"); or 3-16d box ($3\frac{1}{2}$" × 0.135"); or 4-8d common ($2\frac{1}{2}$" × 0.131"); or 4-10d box (3" × 0.128"); or 4-3" × 0.131" nails	Toe nail
		3-16d box ($3\frac{1}{2}$" × 0.135"); or 2-16d common ($3\frac{1}{2}$" × 0.162"); or 3-10d box (3" × 0.128"); or 3-3" × 0.131" nails	End nail
18	Top plates, laps at corners and intersections	2-10d box (3" × 0.128"); or 2-10d common ($3\frac{1}{2}$" × 0.162"); or 3-3" × 0.131" nails	Face nail
19	1" brace to each stud and plate	2-8d box ($2\frac{1}{2}$" × 0.113"); or 2-8d common ($2\frac{1}{2}$" × 0.131"); or 2-10d box (3" × 0.128"); or 2 staples, 1" crown, 16 ga., $1\frac{3}{4}$" long	Face nail
20	1" × 6" sheathing to each bearing	2-8d box ($2\frac{1}{2}$" × 0.113"); or 2-8d common ($2\frac{1}{2}$" × 0.131"); or 2-10d box (3" × 0.128"); or 2 staples, 1" crown, 16 ga., $1\frac{3}{4}$" long	Face nail
21	1" × 8" and wider sheathing to each bearing	3-8d box ($2\frac{1}{2}$" × 0.113"); or 3-8d common ($2\frac{1}{2}$" × 0.131"); or 3-10d box (3" × 0.128"); or 3 staples, 1" crown, 16 ga., $1\frac{3}{4}$" long	Face nail
	Wider than 1" × 8"	4-8d box ($2\frac{1}{2}$" × 0.113"); or 4-8d box ($2\frac{1}{2}$" × 0.113"); or 5-8d common ($2\frac{1}{2}$" × 0.131"); or 3-10d box (3" × 0.128"); or 4 staples, 1" crown, 16 ga., $1\frac{3}{4}$" long	Face nail
Floor			
22	Joist to sill, top plate or girder	4-8d box ($2\frac{1}{2}$" × 0.113"); or 3-8d common ($2\frac{1}{2}$" × 0.131"); or 3-10d box (3" × 0.128"); or 3-3" × 0.131" nails	Toe nail
		8d box ($2\frac{1}{2}$" × 0.113")	4" o.c. face nail
23	Rim joist, band joist or blocking to sill or top plate (roof applications also)	8d common ($2\frac{1}{2}$" × 0.131") or 10d box (3" × 0.128") or 3" × 0.131" nails	6" o.c. face nail
24	1" × 6" subfloor or less to each joist	2-8d box ($2\frac{1}{2}$" × 0.113"); or 2-8d common ($2\frac{1}{2}$" × 0.131"); or 3-10d box (3" × 0.128"); or 3 staples, 1" crown, 16 ga., $1\frac{3}{4}$" long	Face nail
25	2" subfloor to joist or girder	3-16d box ($3\frac{1}{2}$" × 0.135"); or 3-16d common ($3\frac{1}{2}$" × 0.162")	Blind and face nail
26	2" planks (plank & beam—floor & roof)	3-16d box ($3\frac{1}{2}$" × 0.135"); or 3-16d common ($3\frac{1}{2}$" × 0.162")	At each bearing, Toe nail

ITEM	DESCRIPTION OF BUILDING ELEMENTS	NUMBER AND TYPE OF FASTENER[a, b, e]	SPACING OF FASTENERS	
			Edges[d] (inches)	Intermediate supports[c, e] (inches)
Wood structural panels, subfloor, roof and interior wall sheathing to framing and particleboard wall sheathing to framing (see Table R602.3(3) for wood structural panel exterior wall sheathing to wall framing)				
31	$\frac{5}{16}$" — $\frac{1}{2}$"	6d common or deformed (2" × 0.113" × 0.099" head); or [illegible] nail (subfloor, wall)	6	6[f]
		8d common ($2\frac{1}{2}$" × 0.131") nail (roof); or [illegible] nail (subfloor, wall)	6	6[f]
		RSRS-01 ($2\frac{1}{2}$" × 0.113") nail (roof)[g]		
32	$\frac{19}{32}$" — $\frac{3}{4}$"	8d common ($2\frac{1}{2}$" × 0.131") nail (subfloor, wall)	6	12
		8d common ($2\frac{1}{2}$" × 0.131") nail (roof); or RSRS-01 ($2\frac{1}{2}$" × 0.113") nail (roof)[g]	6	6[f]
		Deformed ($2\frac{1}{2}$" × 0.113" × 0.220" head) nail (roof or subfloor)	6	12
33	$\frac{7}{8}$" — $1\frac{1}{4}$"	10d common (3" × 0.148") nail; or ($3\frac{1}{2}$" × 0.131" × 0.281" head) deformed nail	6	12
Other wall sheathing[h]				
34	$\frac{1}{2}$" structural cellulosic fiberboard sheathing	$\frac{1}{2}$" × 0.120" galvanized roofing nail, $\frac{7}{16}$" head diameter, or $\frac{1}{2}$" long 16 ga. staple with $\frac{7}{16}$" or 1" crown	3	6
35	$\frac{25}{32}$" structural cellulosic fiberboard sheathing	$\frac{1}{2}$" × 0.120" galvanized roofing nail, $\frac{7}{16}$" head diameter, or	3	6
		$1\frac{1}{2}$" long 16 ga. staple with $\frac{7}{16}$" or 1" crown		
36	$\frac{1}{2}$" gypsum sheathing[d]	$1\frac{1}{2}$" × 0.120" galvanized roofing nail, $\frac{7}{16}$" head diameter, or $1\frac{5}{8}$" long 16 ga.;	7	7
		staple galvanized, $1\frac{1}{2}$" long $\frac{7}{16}$" or 1" crown or $1\frac{5}{8}$" screws, Type W or S		
37	$\frac{5}{8}$" gypsum sheathing[d]	$1\frac{5}{8}$" × 0.120" galvanized roofing nail, $\frac{7}{16}$" head diameter, or $1\frac{5}{8}$" long 16 ga.;	7	7
		staple galvanized, $1\frac{5}{8}$" long $\frac{7}{16}$" or 1" crown or $1\frac{5}{8}$" screws, Type W or S		
Wood structural panels, combination subfloor underlayment to framing				
38	$\frac{1}{2}$" and less	Deformed (2" × 0.113") or Deformed (2" × 0.120") nail; or 8d common ($2\frac{1}{2}$" × 0.131") nail	6	12
39	$\frac{19}{32}$" — 1"	8d common ($2\frac{1}{2}$" × 0.131") nail; or Deformed (2" × 0.113") or Deformed ($2\frac{1}{2}$" × 0.120") nail	6	12
40	$1\frac{1}{8}$" — $1\frac{1}{4}$"	10d common (3" × 0.148") nail; or Deformed (3" × 0.131") or Deformed ($2\frac{1}{2}$" × 0.120") nail	6	12

For SI: 1 inch = 25.4 mm, 1 foot = 304.8 mm, 1 mile per hour = 0.447 m/s; 1 ksi = 6.895 MPa.

a. Nails are smooth-common, box or deformed shanks except where otherwise stated. Nails used for framing and sheathing connections are carbon steel and shall have minimum average bending yield strengths as shown: 80 ksi for shank diameter of 0.192 inch (20d common nail), 90 ksi for shank diameters larger than 0.142 inch but not larger than 0.177 inch, and 100 ksi for shank diameters of 0.142 inch or less. Connections using nails and staples of other materials, such as stainless steel, shall be designed by accepted engineering practice or approved under Section R104.11.

b. RSRS-01 is a Roof Sheathing Ring Shank nail meeting the specifications in ASTM F1667.

c. Nails shall be spaced at not more than 6 inches on center at all supports where spans are 48 inches or greater.

d. Four-foot by 8-foot or 4-foot by 9-foot panels shall be applied vertically.

e. Spacing of fasteners not included in this table shall be based on Table R602.3(2).

f. For wood structural panel roof sheathing attached to gable end roof framing and to intermediate supports within 48 inches of roof edges and ridges, nails shall be spaced at 4 inches on center where the ultimate design wind speed is greater than 130 mph in Exposure B or greater than 110 mph in Exposure C.

g. Gypsum sheathing shall conform to ASTM C1396 and shall be installed in accordance with ASTM C1280 or GA 253. Fiberboard sheathing shall conform to ASTM C208.

ITEM	DESCRIPTION OF BUILDING ELEMENTS	NUMBER AND TYPE OF FASTENER[a, b, e]	SPACING AND LOCATION
27	Band or rim joist to joist	3-16d common ($3\frac{1}{2}$" × 0.162"); or 4-10d box (3" × 0.128"); or 4-3" × 0.131" nails; or 4-3" × 14 ga. staples, $1\frac{3}{4}$" crown	End nail
28	Built-up girders and beams, 2-inch lumber layers	20d common (4" × 0.192") or	Nail each layer as follows: 32" o.c. at top and bottom and staggered.
		10d box (3" × 0.128") or 3" × 0.131" nails	24" o.c. face nail at top and bottom staggered on opposite sides
		And,	
		2-20d common (4" × 0.192") or 3-16d box (3" × 0.135") or 3-3" × 0.131" nails	Face nail at ends and at each splice
29	Ledger strip supporting joists or rafters	4-16d box ($3\frac{1}{2}$" × 0.135"); or 3-16d common ($3\frac{1}{2}$" × 0.162"); or 4-10d box (3" × 0.128"); or 4-3" × 0.131" nails	At each joist or rafter, face nail
30	Blocking or blocking to joist, rafter or truss	2-10d box (3" × 0.128"); or 2-8d common ($2\frac{1}{2}$" × 0.131"); or 2-3" × 0.131" nails	Each end, toe nail

h. Spacing of fasteners on floor sheathing panel edges applies to panel edges supported by framing members and required blocking and at floor perimeters only. Spacing of fasteners on roof sheathing panel edges applies to panel edges supported by framing members and required blocking. Blocking of roof or floor sheathing panel edges perpendicular to the framing members need not be provided except as required by other provisions of this code. Floor perimeter shall be supported by framing members or solid blocking.

i. Where a rafter is fastened to an adjacent parallel ceiling joist in accordance with this schedule, provide two toe nails on one side of the rafter and toe nails from the ceiling joist to top plate in accordance with this schedule. The toe nail on the opposite side of the rafter shall not be required.

TABLE R602.3(2)

ALTERNATE ATTACHMENTS TO TABLE R602.3(1)

R602.3 Design and Construction

Exterior walls of wood-frame construction shall be designed and constructed in accordance with the provisions of this chapter and Figures R602.3(1) and R602.3(2), or in accordance with AWC NDS. Components of exterior walls shall be fastened in accordance with Tables R602.3(1) through R602.3(4). Wall sheathing shall be fastened directly to framing members and, where placed on the exterior side of an exterior wall, shall be capable of resisting the wind pressures listed in Table R301.2.1(1) adjusted for height and exposure using Table R301.2.1(2) and shall conform to the requirements of Table R602.3(3). Wall sheathing used only for exterior wall covering purposes shall comply with Section R703.

Studs shall be continuous from support at the sole plate to a support at the top plate to resist loads perpendicular to the wall. The support shall be a foundation or floor, ceiling or roof diaphragm or shall be designed in accordance with accepted engineering practice.

Exception: Jack studs, trimmer studs and cripple studs at openings in walls that comply with Tables R602.7(1) and R602.7(2).

TABLE R602.3(1)

FASTENING SCHEDULE

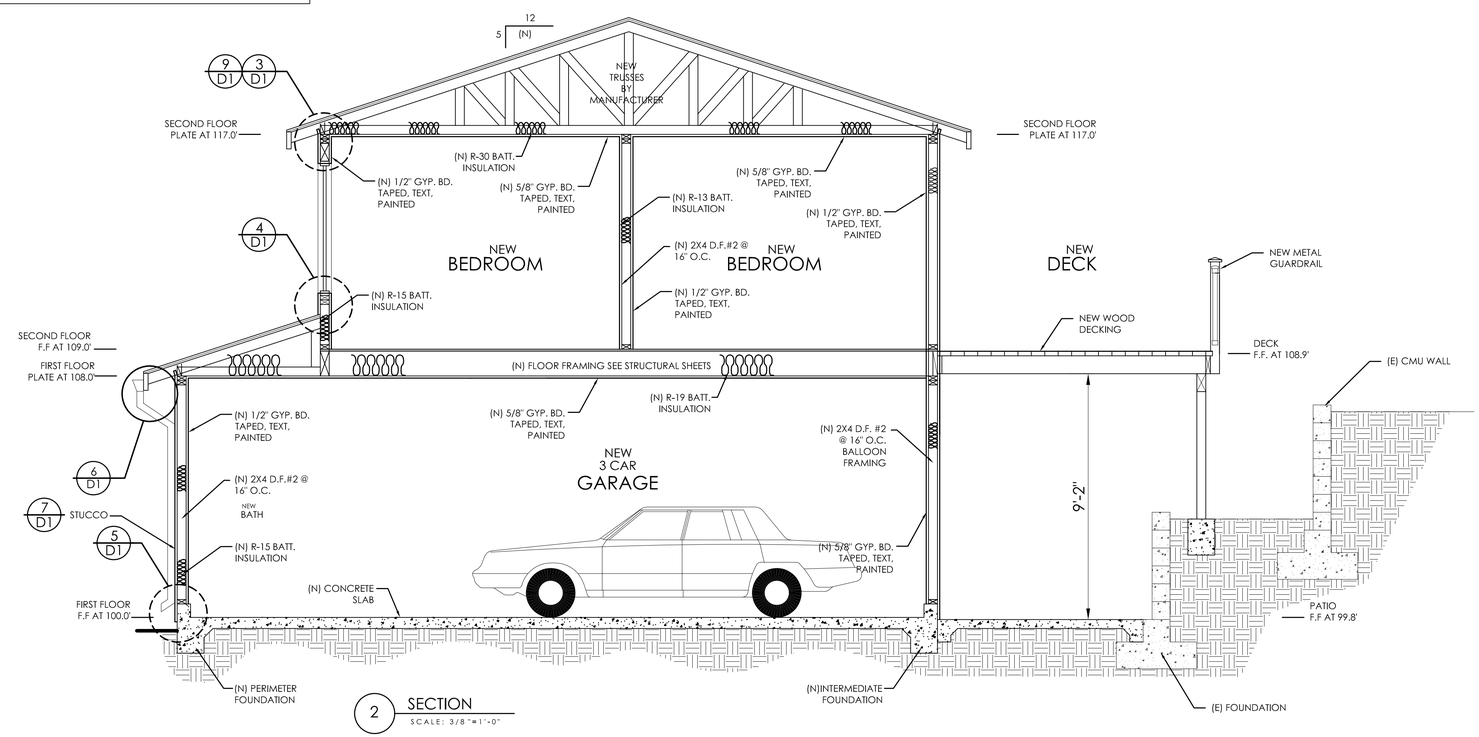

2 SECTION
SCALE: 3/8"=1'-0"

E & L
BUILDING DESIGN STUDIO
150 CAYUGA ST. SUITE 1
SALINAS, CA. 93901
O: (831)250-8069
e_ldesigns@hotmail.com

REVISION
DATE:
BY:
0

38 CLAUSEN ROAD

38 CLAUSEN ROAD
WATSONVILLE, CA. 95076
A.P.N.: 119-221-002-000

TITLE: SECTION

SCALE:3/8"=1'-0"

DATE: 5/22/24

JOB NUMBER: 23-54

PAGE: A6

THE USE OF THESE PLANS AND SPECIFICATIONS SHALL BE RESTRICTED TO THE ORIGINAL SITE FOR WHICH THEY WERE PREPARED AND PUBLICATION THEREOF IS EXPRESSLY LIMITED TO SUCH USE. REUSE, REPRODUCTION, OR PUBLICATION BY ANY METHOD, IN WHOLE OR IN PART, IS PROHIBITED. TITLE TO THE PLANS AND SPECIFICATIONS REMAINS WITH THE DESIGNER, AND VISUAL CONTACT WITH THEM CONSTITUTES PRIMA FACE EVIDENCE OF THESE RESTRICTIONS.

GENERAL ELECTRICAL NOTES

150(k) RESIDENTIAL LIGHTING

1. LUMINAIRE REQUIREMENTS:
   A. **LUMINAIRE EFFICACY**; ALL INSTALLED LUMINAIRES SHALL BE HIGH EFFICACY IN ACCORDANCE WITH TABLE 150.0-A.
   C. **RECESSED DOWNLIGHT LUMINAIRES IN CEILINGS**. LUMINAIRES RECESSED INTO CEILINGS SHALL MEET ALL OF THE FOLLOWING REQUIREMENTS:
   i. . BE LISTED. AS DEFINED IN SECTION 100.1, FOR ZERO CLEARANCE INSULATION CONTACT (IC) BY UNDERWRITERS LABORATORIES OR OTHER NATIONALLY RECOGNIZED TESTING/RATING LABORATORY; AND
   ii. HAVE A LABEL THAT CERTIFIES THE LUMINAIRE IS AIRTIGHT WITH AIR LEAKAGE LESS THAN 2.0 CFM AT 75 PASCALS WHEN TESTED IN ACCORDANCE WITH ASTM E283. AN EXHAUST FAN HOUSING SHALL NOT BE REQUIRED TO BE CERTIFIED AIRTIGHT; AND
   F. **LIGHTING INTEGRAL TO EXHAUST FANS**. LIGHTING INTEGRAL TO EXHAUST FANS SHALL MEET THE APPLICABLE REQUIREMENTS OF SECTION 150.0(K). EXCEPTION TO SECTION 150.0(K)1F: LIGHTING INSTALLED BY THE MANUFACTURER IN KITCHEN EXHAUST HOODS.
2. INTERIOR LIGHTING SWITCHING DEVICES AND CONTROLS.
   B. EXHAUST FANS SHALL BE SWITCHED SEPARATELY FROM LIGHTING SYSTEMS EXCEPTION TO SECTION 150.0(K)2B: LIGHTING INTEGRAL TO AN EXHAUST FAN MAY BE ON THE SAME SWITCH AS THE FAN PROVIDED THE LIGHTING CAN BE SWITCHED OFF IN ACCORDANCE WITH THE APPLICABLE PROVISIONS IN SECTION 150.0(K)2 WHILE ALLOWING THE FAN TO CONTINUE TO OPERATE FOR AN EXTENDED PERIOD OF TIME.
   C. LUMINAIRES SHALL BE SWITCHED WITH READILY ACCESSIBLE CONTROLS THAT PERMIT THE LIGHTING TO BE MANUALLY SWITCHED ON AND OFF.
   D. LIGHTING CONTROLS AND EQUIPMENT SHALL BE INSTALLED IN ACCORDANCE WITH THE MANUFACTURER'S INSTRUCTIONS.
   E. NO CONTROLS SHALL BYPASS A DIMMER OR VACANCY SENSOR FUNCTION WHERE THAT DIMMER OR VACANCY SENSOR HAS BEEN INSTALLED TO COMPLY WITH SECTION 150.0(K).
   F. LIGHTING CONTROLS SHALL COMPLY WITH THE APPLICABLE REQUIREMENTS OF SECTION 110.9.
   J. IN BATHROOMS, GARAGES, LAUNDRY ROOMS, AND UTILITY ROOMS, AT LEAST ONE LUMINAIRE IN EACH OF THESE SPACES SHALL BE CONTROLLED BY A VACANCY SENSOR
   L. UNDERCABINET LIGHTING SHALL BE SWITCHED SEPARATELY FROM OTHER LIGHTING SYSTEMS.
3. RESIDENTIAL OUTDOOR LIGHTING. IN ADDITION TO MEETING THE REQUIREMENTS OF SECTION 150.0(K)1A. LUMINAIRES PROVIDING RESIDENTIAL OUTDOOR LIGHTING SHALL MEET THE FOLLOWING REQUIREMENTS, AS APPLICABLE:
   A. FOR SINGLE-FAMILY RESIDENTIAL BUILDINGS, OUTDOOR LIGHTING PERMANENTLY MOUNTED TO A RESIDENTIAL BUILDING, OR TO OTHER BUILDINGS ON THE SAME LOT, SHALL MEET THE REQUIREMENT IN ITEM **i** AND THE REQUIREMENTS IN EITHER ITEM **ii** OR ITEM **iii**:
   i. CONTROLLED BY A MANUAL ON AND OFF SWITCH THAT DOES NOT OVERRIDE TO ON THE AUTOMATIC ACTIONS OF ITEMS **ii** OR **iii** BELOW; AND
   ii. CONTROLLED BY PHOTOCELL AND MOTION SENSOR. CONTROLS THAT OVERRIDE TO ON SHALL NOT BE ALLOWED UNLESS THE OVERRIDE AUTOMATICALLY REACTIVATES THE MOTION SENSOR WITHIN 6 HOURS; OR
   iii. CONTROLLED BY ONE OF THE FOLLOWING METHODS:
   a. PHOTOCONTROL AND AUTOMATIC TIME SWITCH CONTROL. CONTROLS THAT OVERRIDE TO ON SHALL NOT BE ALLOWED UNLESS THE OVERRIDE SHALL AUTOMATICALLY RETURN THE PHOTOCONTROL AND AUTOMATIC TIME SWITCH CONTROL TO ITS NORMAL OPERATION WITHIN 6 HOURS.; OR
   b. ASTRONOMICAL TIME CLOCK. CONTROLS THAT OVERRIDE TO ON SHALL NOT BE ALLOWED UNLESS THE OVERRIDE SHALL AUTOMATICALLY RETURN THE ASTRONOMICAL CLOCK TO ITS NORMAL OPERATION WITHIN 6 HOURS AND WHICH IS PROGRAMMED TO AUTOMATICALLY TURN THE OUTDOOR LIGHTING OFF DURING DAYLIGHT HOURS; OR
   c. ENERGY MANAGEMENT CONTROL SYSTEM WHICH MEETS ALL OF THE FOLLOWING REQUIREMENTS: AT A MINIMUM PROVIDES THE FUNCTIONALITY OF AN ASTRONOMICAL TIME CLOCK IN ACCORDANCE WITH SECTION 110.9; MEETS THE INSTALLATION CERTIFICATION REQUIREMENTS IN SECTION 130.4; DOES NOT HAVE AN OVERRIDE OR BYPASS SWITCH THAT ALLOWS THE LUMINAIRE TO BE ALWAYS ON; AND IS PROGRAMMED TO AUTOMATICALLY TURN THE OUTDOOR LIGHTING OFF DURING DAYLIGHT HOURS.
4. ALL INSTALLED LIGHTS SHALL BE HIGH EFFICACY LIGHT.
5. SCREW BASED LUMINAIRES SHALL BE HIGH EFFICACY AND CONTROLLED BY DIMMERS OR VACANCY SENSORS. INSTALLED LAMPS SHALL BE MARKED WITH 'JA8-2022' OR 'JA8-2022-E' AS SPECIFIED IN REFERENCE JOINT APPENDIX JA8. LIGHT SOURCES NOT MARKED 'JA8-2022-E' SHALL NOT BE INSTALLED IN ENCLOSED LUMINARIES." CENC150.0(K)1C&H. 150.0(K)2K
6. RECESSED DOWNLIGHT LUMINAIRES IN CEILINGS MUST BE INSTALLED PER CENC150.0(K) 1C. BE LISTED IC RATED. LABELED FOR AIR LEAKAGE LESS THAN 2.0 CFM. BE SEALED WITH A GASKET OR CAULK TO THE CEILING. HAVE ACCESSIBLE BALLASTS/DRIVERS IF HARDWIRED. NOT CONTAIN A SCREW BASE SOCKETS. COMPLY WITH JA8. AND MARKED JA8-2022-E AS SPECIFIED IN REFERENCE APPENDIX JA8." CENC 150.0(K)1C

TABLE 150.0-A CLASSIFICATION OF HIGH EFFICACY LIGHT SOURCES

HIGH EFFICACY LIGHT SOURCES	
LUMINAIRES INSTALLED WITH ONLY THE LIGHTING TECHNOLOGIES IN THIS TABLE SHALL BE CLASSIFIED AS HIGH EFFICACY	
LIGHT SOURCES IN THIS COLUMN OTHER THAN THOSE INSTALLED IN CEILING RECESSED DOWN LIGHT LUMINAIRES ARE CLASSIFIED AS HIGH EFFICACY AND ARE **NOT** REQUIRED TO COMPLY WITH REFERENCE JOINT APPENDIX JA8	LIGHT SOURCES IN THIS COLUMN SHALL BE CERTIFIED TO THE COMMISSION AS HIGH EFFICACY LIGHT SOURCES IN ACCORDANCE WITH REFERENCE JOINT APPENDIX JA8 AND BE MARKED AS MEETING JA8.
1. PIN-BASED LINEAR OR COMPACT FLUORESCENT LIGHT SOURCES USING ELECTRONIC BALLASTS. 2. PULSE-START METAL HALIDE. 3. HIGH PRESSURE SODIUM. 4. GU-24 SOCKETS CONTAINING LIGHT SOURCES OTHER THAN LEDS. A.8 5. LUMINAIRES WITH HARDWIRED HIGH FREQUENCY GENERATOR AND INDUCTION LAMP. 6. INSEPARABLE SSL LUMINAIRES THAT ARE INSTALLED OUTDOORS. 7. INSEPARABLE SSL LUMINAIRES CONTAINING COLORED LIGHT SOURCES THAT ARE INSTALLED TO PROVIDE DECORATIVE LIGHTING.	8. ALL LIGHT SOURCES IN CEILING RECESSED DOWNLIGHT LUMINAIRES. NOTE THAT CEILING RECESSED DOWNLIGHT LUMINAIRES SHALL NOT HAVE SCREW BASES REGARDLESS OF LAMP TYPE AS DESCRIBED IN SECTION 150.0(K)1C. 9. GU-24 SOCKETS CONTAINING LED LIGHT SOURCES. 10. ANY LIGHT SOURCE NOT OTHERWISE LISTED IN THIS TABLE AND CERTIFIED TO THE COMMISSION AS COMPLYING WITH JOINT APPENDIX 8.

NOTES:
a. GU-24 SOCKETS CONTAINING LIGHT SOURCES SUCH AS COMPACT FLUORESCENT LAMPS AND INDUCTION LAMPS.
b. CALIFORNIA TITLE 20 SECTION 1605(b)3 DOES NOT ALLOW INCANDESCENT SOURCES TO HAVE A GU-24 BASE.
c. ALL INSTALLED LIGHTS SHALL BE HIGH EFFICACY LIGHT.

SPECIFICATIONS

1. PROVIDE ARC-FAULT PROTECTION AT ALL NEW BRANCH CIRCUITS. CEC ART 210.12(A) ARC-FAULT CIRCUIT-INTERRUPTER PROTECTION MUST BE PROVIDED IN ACCORDANCE WITH CEC 210.12(A), (B) AND (C). AFCI DEVICES MUST BE INSTALLED IN READILY ACCESSIBLE LOCATIONS. (A) WHERE REQUIRED, ALL 15A OR 20A, 120V BRANCH CIRCUITS IN DWELLING UNITS SUPPLYING OUTLETS OR DEVICES IN KITCHENS, FAMILY ROOMS, DINING ROOMS, LIVING ROOMS, PARLORS, LIBRARIES, DENS, BEDROOMS, SUNROOMS, RECREATION ROOMS, CLOSETS, HALLWAYS, LAUNDRY AREAS, OR SIMILAR ROOMS OR AREAS. CABINETRY OR BEING DEDICATED TO APPLIANCES DOES NOT EXEMPT REQUIREMENT.
2. ALL 125-VOLT, SINGLE-PHASE. 15- AND 20-AMPERE NEW RECEPTACLES SHALL BE LISTED TAMPER-RESISTANT RECEPTACLES. CEC ART 406.12
3. ALL 120-VOLT 15 AND 20 AMPERE OR BRANCH CIRCUITS THAT SUPPLYING OUTLETS INSTALLED IN DWELLING UNIT FAMILY ROOMS, DINING ROOMS, LIVING ROOMS, PARLORS, LIBRARIES, DENS, BEDROOMS, SUNROOMS, RECREATION ROOMS, CLOSETS, HALLWAYS, LAUNDRY ROOMS AND SIMILAR ROOMS OR AREAS SHALL BE PROTECTED BY A LISTED ARC-FAULT CIRCUIT-INTERRUPTER (AFCI) COMBINATION-TYPE. GUESTROOMS (210-18) AND GUEST SUITES THAT ARE PROVIDED WITH PERMANENT PROVISIONS FOR COOKING SHALL HAVE AFCI. CEC ART 210.12(B)
4. RECEPTACLES SHALL BE INSTALLED SUCH THAT NO POINT MEASURED HORIZONTALLY ALONG THE FLOOR LINE IN ANY WALL SPACE IS MORE THAN 6' FROM THE RECEPTACLE OUTLET. CEC SECTION 210.52(A)(1)
5. ALL 125-VOLT, SINGLE-PHASE. 15 AND 20-AMPERE RECEPTACLES INSTALLED IN; BATHROOMS, GARAGES, OUTDOORS, CRAWL SPACES, KITCHENS, AND LAUNDRY UTILITY SHALL HAVE GROUNDFAULT CIRCUIT-INTERRUPTER PROTECTION FOR PERSONNEL. CEC SECTION 552.41 (C)
6. APPROVED ADDRESS MUST BE CLEARLY IDENTIFIED WITH REFLECTIVE AND/OR ILLUMINATED NUMBERS AND/OR LETTERS A MINIMUM OF 4" HIGH AND ½" STROKE. CRC SECTION R319.1
7. ALL BRANCH CIRCUITS THAT SUPPLY 125-VOLT, SINGLE-PHASE. 15 & 20 AMP RECEPTACLE OUTLETS INSTALLED IN DWELLING BEDROOMS SHALL BE PROTECTED BY AN ARC-FAULT CIRCUIT INTERRUPTERS.
8. PROVIDE A RECEPTACLE OUTLET IF THE WALL IS 2 FEET WIDE OR GREATER. OUTLETS SHALL BE SPACED NO MORE THAN 12 FEET APART AND A MAXIMUM OF 6 FEET FROM END OF WALLS OR OPENINGS. (CEC 210.52(A)(1)&(2))
9. PROVIDE ELECTRICAL OUTLETS IN HALLWAYS GREATER THAN 10 FEET IN LENGTH. CEC SECTION 210.52(H)
8. PROVIDE ONE SWITCHED LIGHT FIXTURE OR SWITCHED-CONTROLLED OUTLET INSTALLED IN HALLWAYS, STAIRWAYS, ATTACHED GARAGES AND DETACHED GARAGES WITH ELECTRICITY. (CEC 210.70(A)(2)(1))
9. IN THE KITCHEN AND DINING AREA, A RECEPTACLE SHALL BE PROVIDED FOR EACH WALL COUNTERTOP SPACE 12 INCHES OR WIDER THAN SO THAT NO POINT IS MORE THAN 24 INCHES FROM AN OUTLET. CEC SECTION 210.52(C)(1)-(5)
10. KITCHEN TO HAVE 2-20 AMP SMALL APPLIANCE DEDICATED BRANCH CIRCUITS, GARBAGE DISPOSAL SHALL HAVE 1-20 AMP DEDICATED BRANCH CIRCUIT, AND LAUNDRY AND BATHROOM FACILITIES SHALL HAVE AT LEAST 1-20 AMP DEDICATED BRANCH CIRCUIT.
11. KITCHEN HOODS SHAL HAVE A MINIMUM VENTILATION RATE OF 100 CFM INTERMITTENT OR 25 CFM CONTININUOS.
12. RECESSED LUMINARIES IN INSULATED CEILINGS SHALL BE LISTED, AIRTIGHT, SEALED, CERTIFIED BALLAST, AND READILY ACCESSIBLE. 2022 TITLE 24 (PART 6), SECTION 150.0(k)(1)(C)(I)(II)(III)(IV)
13. EXHAUST FANS SHALL BE CAPABLE OF PROVIDING 5 AIR CHANGES PER HOUR, MINIMUM.
14. OVERHEAD WIRE SHALL BE MARKED OR LISTED FOR SUNLIGHT RESISTANACE.
15. ALL CONDUCTERS TO BE COPPER IN CONDUIT.
16. ELECTRICAL SYSTEM SHALL BE GROUNDED PER CODE REQUIREMENTS (THE USE OF PLUMBING PIPELINES AS AN ELECTRICAL GROUND IS PROHIBITED).
17. EXTERIOR LIGHT FIXTURES NOTE: ALL FIXTURES INSTALLED IN WET LOCATIONS SHALL BE MARKED, "SUITABLE FOR WET LOCATIONS" ALL FIXTURES INSTALLED FOR WET OR DAMP LOCATIONS."
18. PROVIDE SEPARATE GFCI CIRCUITS FOR BATHROOM AND EXTERIOR RECEPTACLES.
19. OUTDOOR LIGHTING ATTACHED TO BLDGS. SHALL BE HIGH EFFICACY & CONTROLLED BY A MOTION SENSOR & PHOTOCONTROL NOT HAVING TO OVERRIDE OR BY SWITCH. 2022 CALIFORNIA ENERGY CODE SECTION 150.0(k)(3)(A)(I)(II)(III)
20. ~6' 125-VOLT G.F.I.C. RECEPTACLES INSTALLED OUTDOORS IN A WET LOCATION SHALL HAVE AN ENCLOSURE THAT IS WEATHERPROOF WETHER OR NOT THE ATTACHMENT PLUG CAP IS NOT INSERTED.
21. PROVIDE AT LEAST ONE WALL SWITCH-CONTROLLED LIGHTING OUTLET INSTALLED TO PROVIDE ILLUMINATION ON THE EXTERIOR SIDE OF OUTDOOR ENTRANCES OR EXITS W/GRADE LEVEL ACCESS. (CEC 210.70(A)(2)(2))
22. PROVIDE GFCI PROTECTION TO ALL 125-VOLT, 15 AND 20 AMP RECEPTACLES INSTALLED OUTDOORS, IN BATHROOMS, BASEMENTS, KITCHEN AT COUNTER TOP SURFACES, CRAWL SPACES BELOW GRADE LEVEL, WITH 6' OF LAUNDRY, UTILITY AND/OR WET BAR SINKS, AND GARAGES". 2022 CEC SECTION 210.8(A)(1-7).
23. ALL EXTERIOR LIGHTING MUST BE HIGH EFFICACY, SWITCHED AND BE CONNECTED TO AN AUTOMATIC CONTROL DEVICE.

SYMBOL LEGEND

	UNDERCABINET FLORESCENT STRIP LIGHT
	DECORATIVE HANGING CEILING FIXTURE (CHANDELIERS)
T	THERMOSTAT
25W	WALL MOUNTED EXTERIOR LIGHTING FIXTURE
	WALL MOUNT INTERIOR LIGHTING FIXTURE
	CEILING MOUNTED FIXTURE HIGH EFFICACY
SMK CO	COMBINATION CEILING MOUNTED SMOKE DETECTOR (HARDWIRED w/BATTERY BACKUP) & CARBON MONOXIDE DETECTOR
	4" INTERIOR RECESSED FLOUR. LIGHTING FIXT.
	6" INTERIOR RECESSED FLOUR. LIGHTING FIXT.
R	220 V 20 AMP RECEPTACLE (RANGE OUTLET)
AFCI	20 AMP 120 V RECEPTACLE MOUNTED AT +16" TO CENTERLINE OF DEVICE (UNLESS OTHERWISE SPECIFIED) ALL BRANCH CIRCUITS THAT SUPPLYING RECEPTACLES IN DWELLING UNIT SHALL BE PROTECTED BY A LISTED ARC-FAULT CIRCUIT-INTERRUPTER (AFCI). CEC ART 210.12(B)
WP	GFCI TYPE DUPLEX RECEPTACLE AND/OR110 V WATERPROOF ENCL. OUTLET
GFCI	BATHROOM GROUND-FAULT CIRCUIT-INTERRUPTER110 V (GFI OR GFCI)
GD	GARBAGE DISPOSAL
EV	208/240-VOLT BRANCH CIRCUIT FOR FUTURE ELECTRIC VEHICLE CHARGING
220 D	220 V 30 AMP RECEPTACLE (DRYER OUTLET)
$	SINGLE POLE 20 AMP SWITCH
$3	SINGLE POLE 20 AMP SWITCH 3 WAY SWITCH
$D	AUTOMATIC DIMMER DOOR SWITCH
$VS	VACANCY SENSOR PER CEn.C 150.0(k)2J
$MD	MOTION DETECTOR SWITCH
	DOOR BELL
	BRANCH CIRCUIT PANEL BOARD

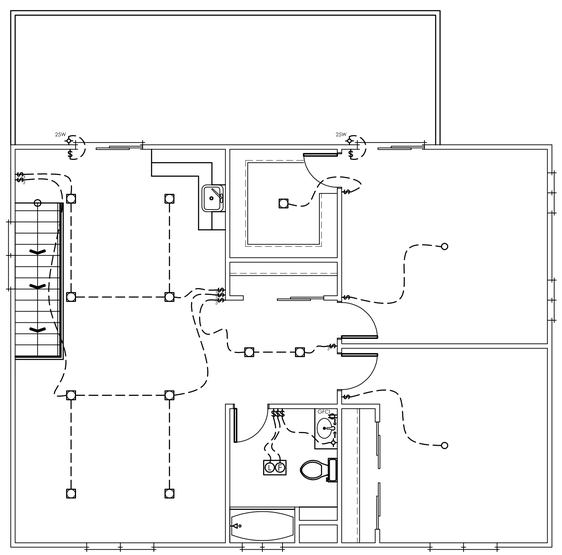

2 ELECTRICAL PLAN - UPPER FLOOR
SCALE: 3/16"=1'-0"

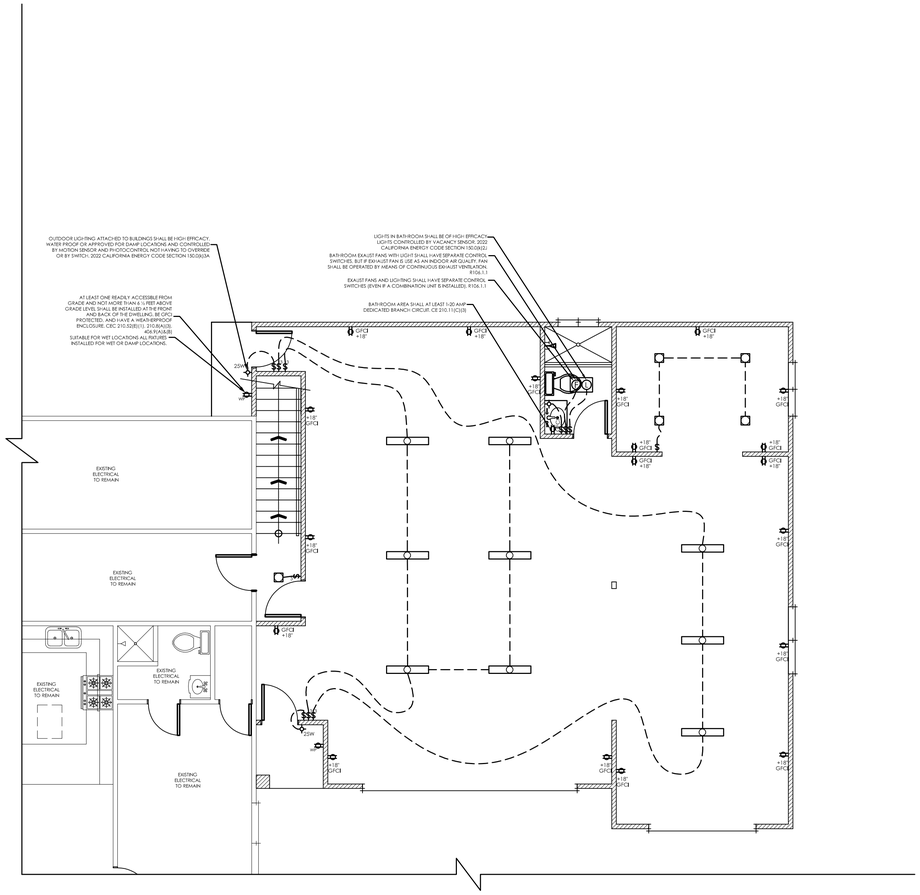

2 ELECTRICAL PLAN - UPPER FLOOR
SCALE: 3/16"=1'-0"

CAL-GREEN GENERAL NOTES

1. THE CAL-GREEN MANDATORY REQUIREMENTS ARE LOCATED ON SHEET G8. 1

CARBON MONOXIDE

1. CO DETECTORS ARE TO BE UL LISTED AND APPROVED BY THE FIRE MARSHALL. INSTALLED PER MANUFACTURERS SPECIFICATIONS, AT LOCATIONS AS PRESCRIBED IN CRC SECTION R315.1.1
2. CARBON MONOXIDE ALARMS SHALL BE INSTALLED OUTSIDE OF EACH SEPERATE DWELLING UNIT SLEEPING AREA IN IMMEDIATE VICINITY OF THE BEDROOM(S). CRC SECTION R315.3
3. SINGLE-AND MULTIPLE STATION CARBON MONOXIDE ALARMS SHALL BE LISTED TO COMPLY WITH UL 2034. CARBON MONOXIDE DETECTORS SHALL BE LISTED TO COMPLY WITH UL 2075. INSTALLATION SHALL BE IN ACCORDANCE WITH NFPA 720 AND THE MANUFACTURER'S INTALLATION INSTRUCTIONS. CRC SECTION R315.1.1 & R315.7.1
4. FOR NEW CONSTRUCTION REQUIRED CARBON MONOXIDE ALARMS SHALL **INTERCONNECTED** AND SHALL BE EQUIPPED WITH A 120v BATTERY BACK-UP. ALARM WIRING SHALL BE DIRECTLY CONNECTED TO THE PERMANENT BUILDING WIRING WITHOUT A DISCONNECTION SWITCH OTHER THAN AS REQUIRED FOR OVERCURRENT PROTECTION. CRC SECTION R315.5

SMOKE ALARMS

1. INSTALL SMOKE ALARMS PER CRC SECTION R314 AND APPLICABLE NFPA STANDARDS. DETECTORS SHALL BE **INTERCONNECTED** IN ALL NEW RESIDENTIAL OCCUPANCIES. (NFPA 72 SECTION 2-2.2.11)
2. IN NEW CONSTRUCTION SMOKE ALARMS SHALL BE INTERCONNECTED AND EQUIPPED WITH A 120v BATTERY BACKUP.
3. SMOKE ALARMS SHALL BE INSTALLED AND MAINTAINED AT ALL OF THE FOLLOWING LOCATIONS: IN EACH SLEEPING ROOM, OUTSIDE OF EACH SEPARATE SLEEPING AREA IN THE IMMEDIATE VICINITY OF THE BEDROOMS, ON EACH ADDITIONAL STORY OF THE DWELLING, INCLUDING BASEMENTS AND HABITABLE ATTICS. CRC SECTION R314.3(1)(2)(3)

E & L
BUILDING DESIGN STUDIO
150 CAYUGA ST. SUITE I
SALINAS, CA 93901
O: (831)250-8069
e_ldesigns@hotmail.com

REVISION
DATE:
BY:
0

38 CLAUSEN ROAD

38 CLAUSEN ROAD
WATSONVILLE, CA. 95076
A.P.N.: 119-221-002-000

TITLE:
ELECTRICAL PLAN
SCALE: 3/16" = 1'-0"

DATE:
5/22/24

JOB NUMBER:
23-54

PAGE:
A7

THE USE OF THESE PLANS AND SPECIFICATIONS SHALL BE RESTRICTED TO THE ORIGINAL SITE FOR WHICH THEY WERE PREPARED AND PUBLICATION THEREOF IS EXPRESSLY LIMITED TO SUCH USE. REUSE, REPRODUCTION, OR PUBLICATION BY ANY METHOD, IN WHOLE OR IN PART, IS PROHIBITED. TITLE TO THE PLANS AND SPECIFICATIONS REMAINS WITH THE DESIGNER, AND VISUAL CONTACT WITH THEM CONSTITUTES PRIMA FACE EVIDENCE OF THE ACCEPTANCE OF THESE RESTRICTIONS.

LEGEND

EXISTING

—(E)W—(E)W—(E)W—(E)W— (E) WATER

NEW

—(N)W—(N)W—(N)W—(N)W— (N) WATER

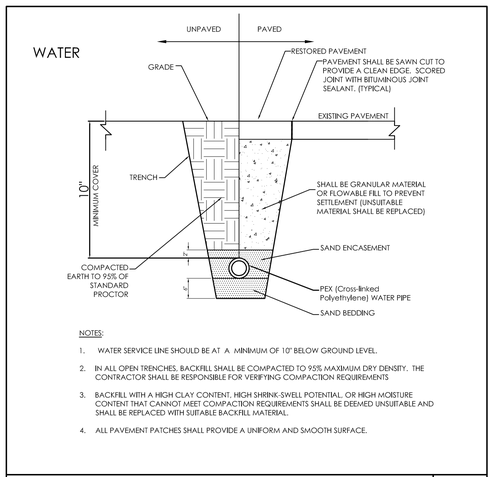

NOTES:

1. WATER SERVICE LINE SHOULD BE AT A MINIMUM OF 10" BELOW GROUND LEVEL.
2. IN ALL OPEN TRENCHES, BACKFILL SHALL BE COMPACTED TO 95% MAXIMUM DRY DENSITY. THE CONTRACTOR SHALL BE RESPONSIBLE FOR VERIFYING COMPACTION REQUIREMENTS
3. BACKFILL WITH A HIGH CLAY CONTENT, HIGH SHRINK-SWELL POTENTIAL, OR HIGH MOISTURE CONTENT THAT CANNOT MEET COMPACTION REQUIREMENTS SHALL BE DEEMED UNSUITABLE AND SHALL BE REPLACED WITH SUITABLE BACKFILL MATERIAL.
4. ALL PAVEMENT PATCHES SHALL PROVIDE A UNIFORM AND SMOOTH SURFACE.

DETAIL N.T.S. 4

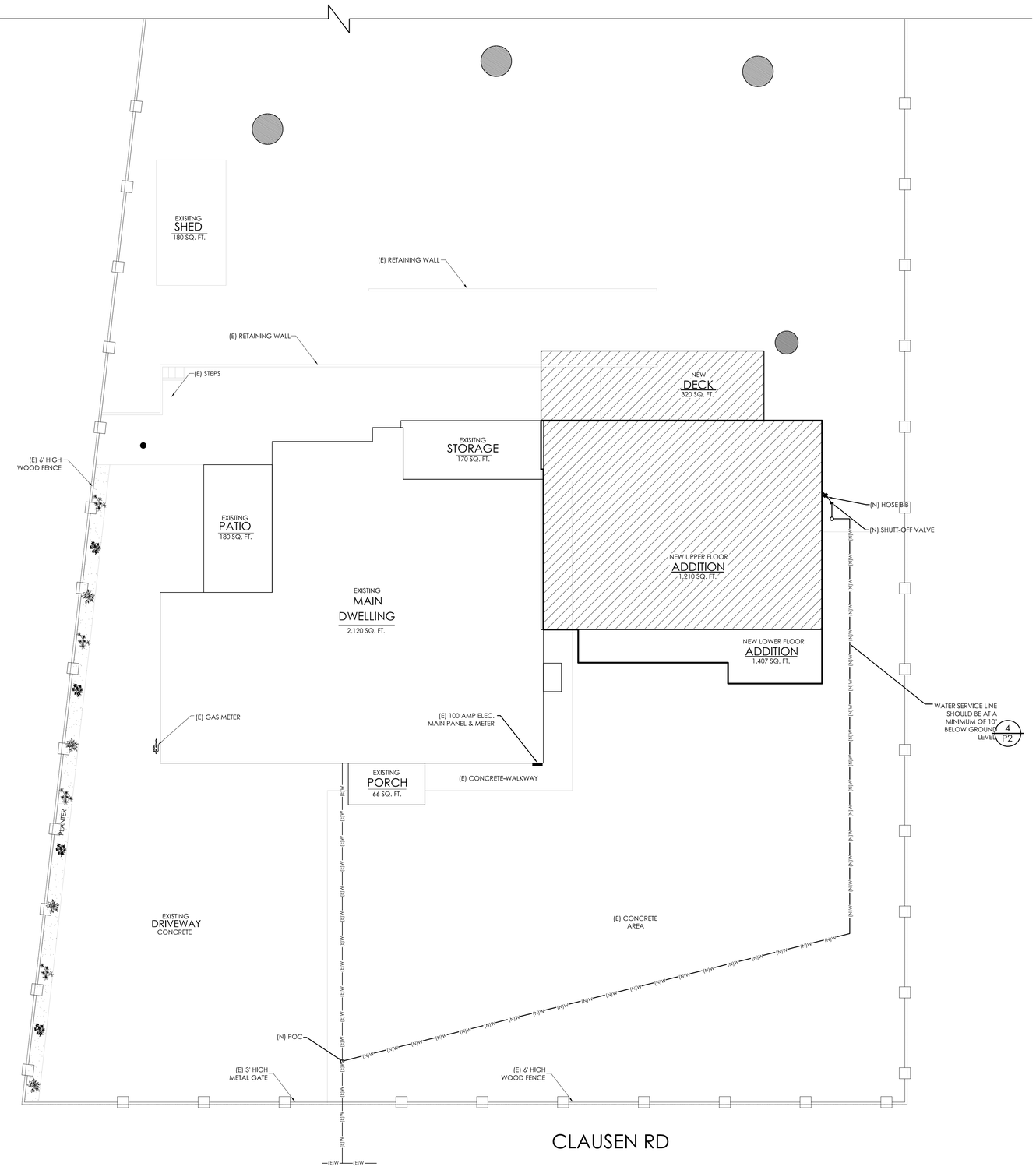

2 EXISTING & PROPOSED UNDERGROUND UTILITY PLAN WATER

SCALE: 1/8"=1'-0"

E & L
BUILDING DESIGN STUDIO
150 CAYUGA ST.
SUITE I
SALINAS, CA. 93901
O: (831)250-8069
e_ldesigns@hotmail.com

REVISION
DATE:
BY:
0

38 CLAUSEN ROAD

38 CLAUSEN ROAD
WATSONVILLE, CA. 95076
A.P.N.: 119-221-002-000

TITLE: UTILITY PLAN (WATER)

SCALE: 1/8"=1'-0"

DATE: 5/22/24

JOB NUMBER: 23-54

PAGE: P1

THE USE OF THESE PLANS AND SPECIFICATIONS SHALL BE RESTRICTED TO THE ORIGINAL SITE FOR WHICH THEY WERE PREPARED AND PUBLICATION THEREOF IS EXPRESSLY LIMITED TO SUCH USE. REUSE, REPRODUCTION, OR PUBLICATION BY ANY METHOD, IN WHOLE OR IN PART, IS PROHIBITED. TITLE TO THE PLANS AND SPECIFICATIONS REMAINS WITH THE DESIGNER, AND VISUAL CONTACT WITH THEM CONSTITUTES PRIMA FACE EVIDENCE OF THE ACCEPTANCE OF THESE RESTRICTIONS.

PLUMBING NOTES

1. WATER SERVICE LINE SHOULD BE AT A MINIMUM OF 10" BELOW GROUND LEVEL.
2. THE PROPOSED NEW SANITARY SEWER LATERAL SHALL ALLOW A MINIMUM OF 12" SEPARATION AT CROSSINGS WITH WATER LINES.
3. SANITARY SEWER LINES SHALL ALWAYS BE PLACED BENEATH WATER LINES INCLUDING CROSSINGS.
4. THE APPLICANT SHALL VERIFY THAT THE NEW LATERAL CAN MAINTAIN A 1% MINIMUM SLOPE AND STILL ACHIEVE THE CONNECTION TO EXISTING LATERAL AT THE MAIN UNIT.
5. ADDITIONAL BUILDING SEWER CLEANOUTS SHALL BE INSTALLED AT INTERVALS NOT EXCEED 100 FEET IN RUNS AND FOR AGGREGATE HORIZONTAL CHANGE IN DIRECTION EXCEEDING 135 DEGREES . (CPC 719.1)
6. PROTECTED SLEEVES SHALL BE PROVIDED TO PROTECT PIPING THROUGH CONCRETE AND MASONRY WALLS, AND CONCRETE FLOORS PER CPC SECTION 312.10.

NOTE:
PROVIDE MIN. 1/4" PER FOOT SLOPE

SEWER

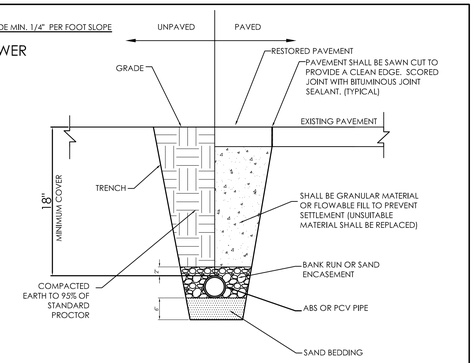

NOTES:

1. UNDERGROUND SEWER LINE SHOULD BE AT A MINIMUM OF 18" BELOW GROUND LEVEL.
2. THE NEW SANITARY SEWER LATERAL SHALL ALLOW A MINIMUM OF 12" SEPARATION AT CROSSINGS WITH WATER LINES.
3. IN ALL OPEN TRENCHES, BACKFILL SHALL BE COMPACTED TO 95% MAXIMUM DRY DENSITY. THE CONTRACTOR SHALL BE RESPONSIBLE FOR VERIFYING COMPACTION REQUIREMENTS
4. BACKFILL WITH A HIGH CLAY CONTENT, HIGH SHRINK-SWELL POTENTIAL, OR HIGH MOISTURE CONTENT THAT CANNOT MEET COMPACTION REQUIREMENTS SHALL BE DEEMED UNSUITABLE AND SHALL BE REPLACED WITH SUITABLE BACKFILL MATERIAL.
5. ALL PAVEMENT PATCHES SHALL PROVIDE A UNIFORM AND SMOOTH SURFACE.

DETAIL N.T.S. 3

LEGEND

EXISTING

(E) SS (E) SS (E) SANITARY SEWER

NEW

(N) SS (N) SS (N) SANITARY SEWER

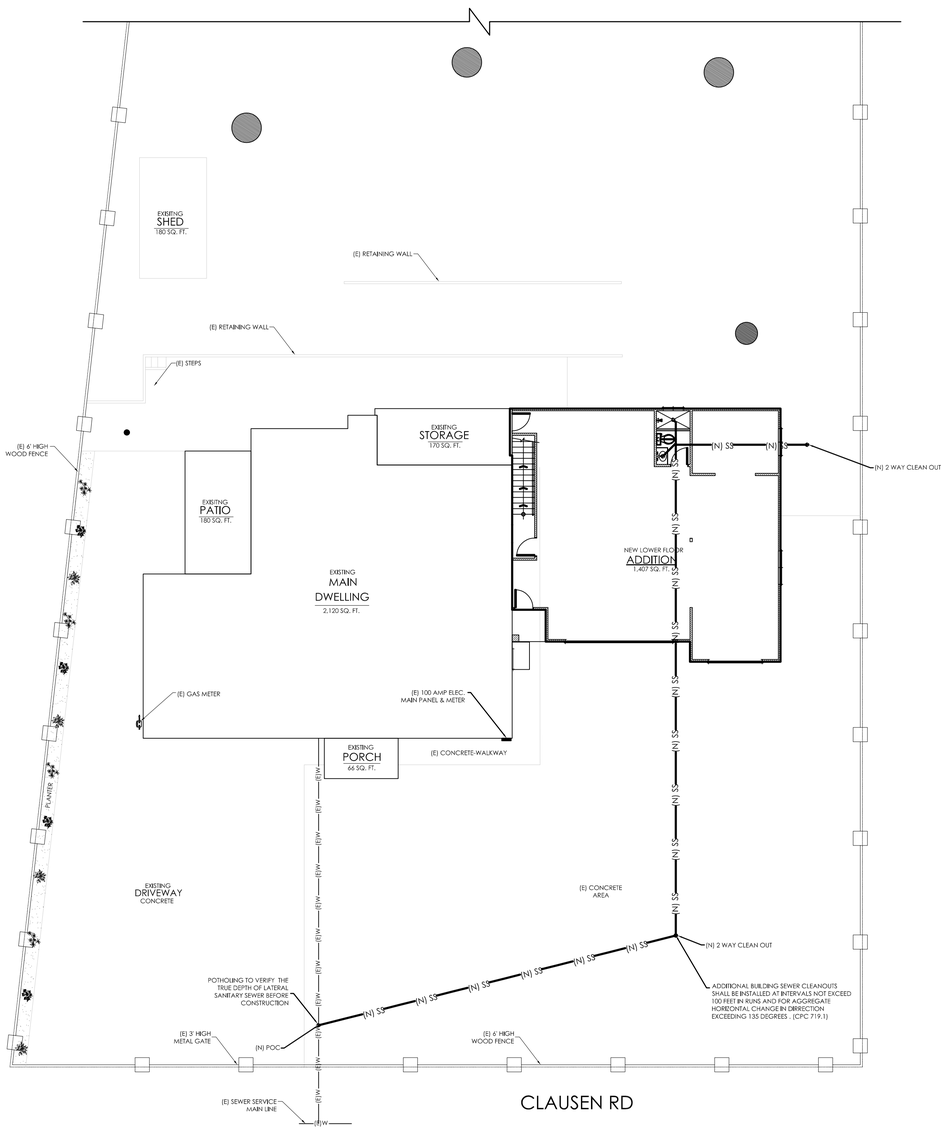

1 EXISTING & PROPOSED UNDERGROUND UTILITY PLAN SEWER
SCALE: 3/32" = 1'-0"
LOWER FLOOR

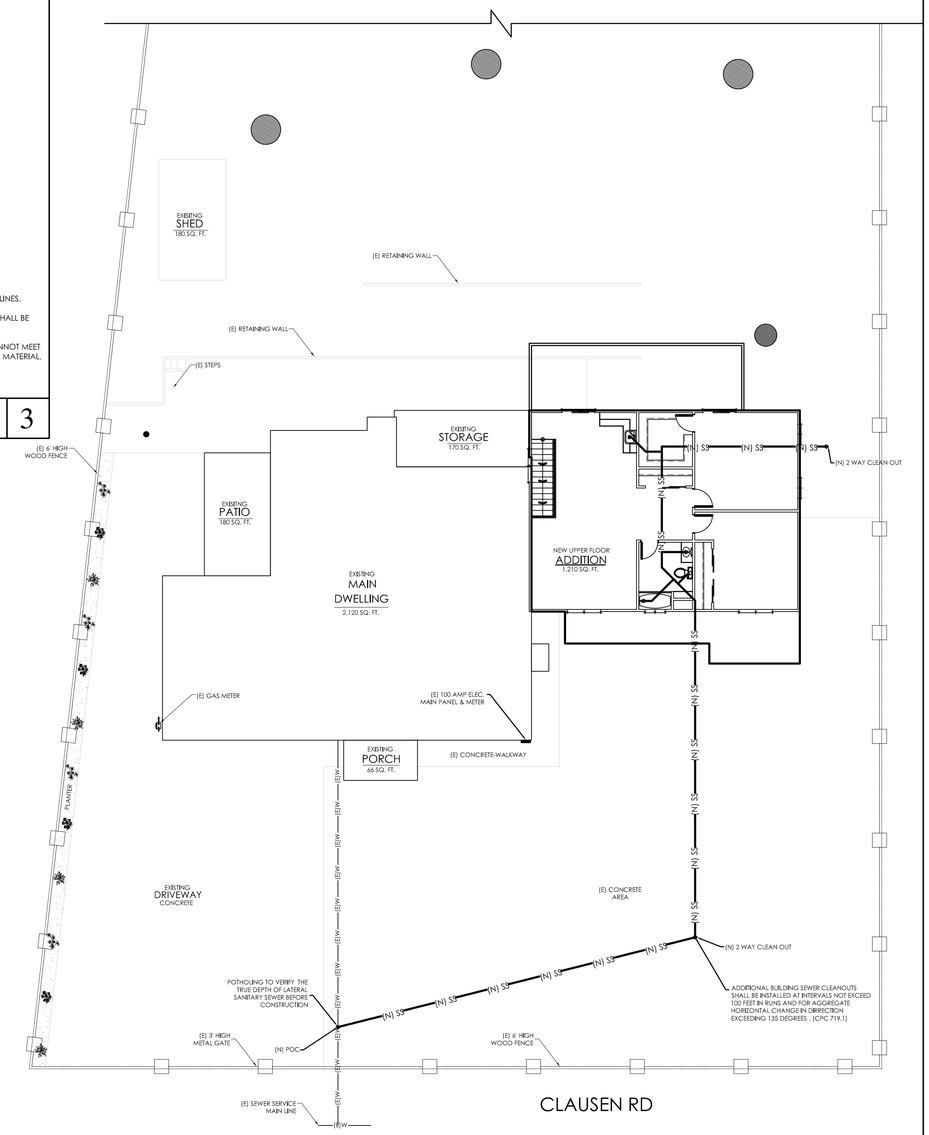

2 EXISTING & PROPOSED UNDERGROUND UTILITY PLAN SEWER
SCALE: 3/32" = 1'-0"
UPPER FLOOR

E & L
BUILDING DESIGN STUDIO
150 CAYUGA ST. SUITE I
SALINAS, CA. 93901
O: (831)250-8069
e_ldesigns@hotmail.com

REVISION
DATE:
BY:
0

38 CLAUSEN ROAD

38 CLAUSEN ROAD
WATSONVILLE, CA. 95076
A.P.N.: 119-221-002-000

TITLE: UTILITY PLAN (SEWER)
SCALE: 3/32" = 1'-0"

DATE: 5/22/24

JOB NUMBER: 23-54

PAGE: P2

THE USE OF THESE PLANS AND SPECIFICATIONS SHALL BE RESTRICTED TO THE ORIGINAL SITE FOR WHICH THEY WERE PREPARED AND PUBLICATION THEREOF IS EXPRESSLY LIMITED TO SUCH USE. REUSE, REPRODUCTION, OR PUBLICATION BY ANY METHOD, IN WHOLE OR IN PART, IS PROHIBITED. TITLE TO THE PLANS AND SPECIFICATIONS REMAINS WITH THE DESIGNER, AND VISUAL CONTACT WITH THEM CONSTITUTES PRIMA FACE EVIDENCE OF THE ACCEPTANCE OF THESE RESTRICTIONS.

NOTE: IN ALL BEDROOMS ONE OPERABLE ESCAPE WINDOW MEETING ALL OF THE FOLLOWING: AN OPENABLE AREA OF NOT LESS THAN 5.7 SQ.FT., WITH A MINIMUM CLEAR 24" HEIGHT AND 20" WIDTH, AND A SILL HEIGHT NOT OVER 44" ABOVE THE FLOOR. CRC SECTION R310.1.1.

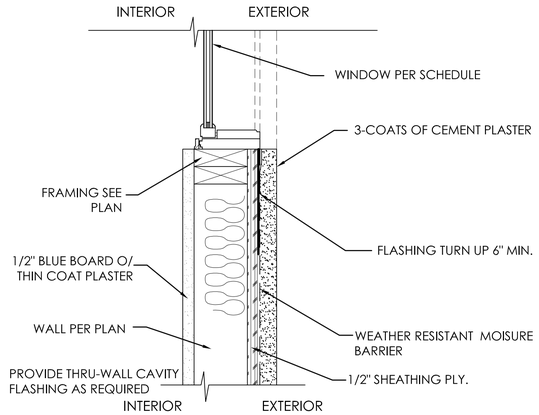

TYPICAL SILL N.T.S. 4

NOTE: IN ALL BEDROOMS ONE OPERABLE ESCAPE WINDOW MEETING ALL OF THE FOLLOWING: AN OPENABLE AREA OF NOT LESS THAN 5.7 SQ.FT., WITH A MINIMUM CLEAR 24" HEIGHT AND 20" WIDTH, AND A SILL HEIGHT NOT OVER 44" ABOVE THE FLOOR. CRC SECTION R310.1.1.

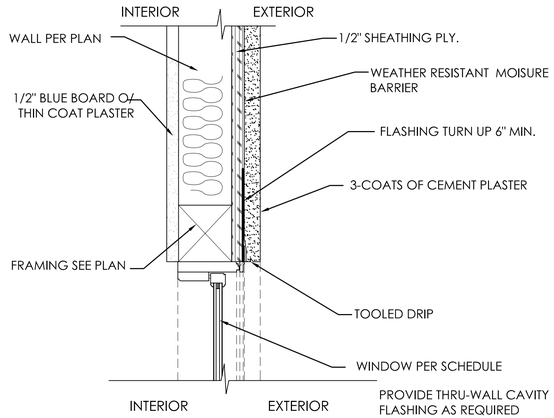

WINDOW HEAD N.T.S. 3

THE THRESHOLD AT ALL OUT SWINGING EXIT DOORS SHALL NOT EXCEED 1.5 INCH. CRC R311.3.1

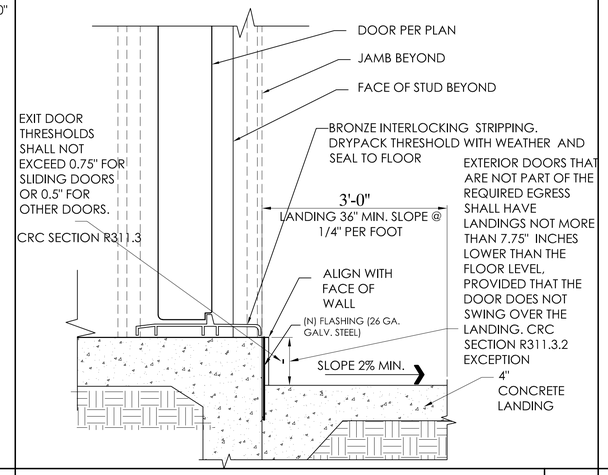

DOOR THRESHOLD N.T.S. 2

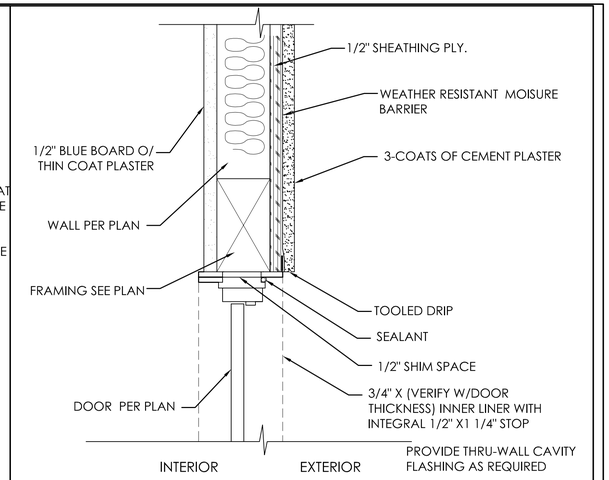

DOOR HEAD N.T.S. 1

WOOD FRAMING MEMBERS THAT REST ON EXTERIOR FOUNDATION WALLS AND ARE LESS THAN 8" FROM EXPOSED EARTH SHALL BE OF NATURALLY DURABLE OR PRESERVATIVE-TREATED WOOD PER CRC R317.1

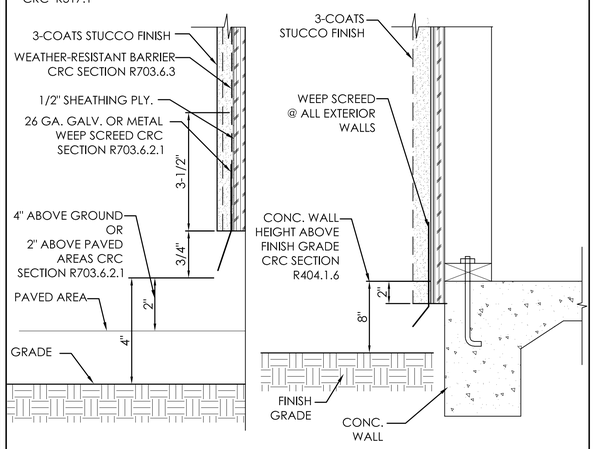

WEEP SCREED N.T.S. 5

MIN. 5% GRADE SLOPE AWAY FROM THE FOUNDATION. SURFACE DRAINAGE SHALL BE DIVERTED TO A STORM SEWER CONVEYANCE OR OTHER APPROVED POINT OF COLLECTION THAT DOES NOT CREATE A HAZARD. LOTS SHALL BE GRADED TO DRAIN SURFACE WATER AWAY FROM FOUNDATION WALLS.

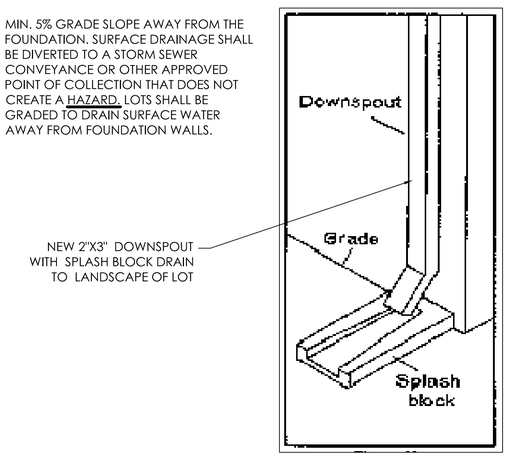

DETAIL N.T.S. 6

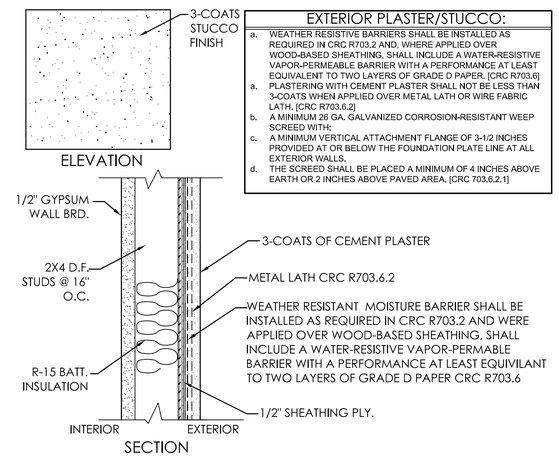

EXTERIOR PLASTER/STUCCO:

a. WEATHER RESISTIVE BARRIERS SHALL BE INSTALLED AS REQUIRED IN CRC R703.2 AND, WHERE APPLIED OVER WOOD-BASED SHEATHING, SHALL INCLUDE A WATER-RESISTIVE VAPOR-PERMEABLE BARRIER WITH A PERFORMANCE AT LEAST EQUIVALENT TO TWO LAYERS OF GRADE D PAPER. [CRC R703.6]
a. PLASTERING WITH CEMENT PLASTER SHALL NOT BE LESS THAN 3-COATS WHEN APPLIED OVER METAL LATH OR WIRE FABRIC LATH. [CRC R703.6.2]
b. A MINIMUM 26 GA. GALVANIZED CORROSION-RESISTANT WEEP SCREED WITH:
c. A MINIMUM VERTICAL ATTACHMENT FLANGE OF 3-1/2 INCHES PROVIDED AT OR BELOW THE FOUNDATION PLATE LINE AT ALL EXTERIOR WALLS.
d. THE SCREED SHALL BE PLACED A MINIMUM OF 4 INCHES ABOVE EARTH OR 2 INCHES ABOVE PAVED AREA. [CRC R703.6.2.1]

STUCCO N.T.S. 7

FOUNDATIONS HAVE BEEN DESIGNED FOR A MAXIMUM SOIL PRESSURE OF 1500 PSF. CRC TABLE R401.1.1

COMPRESSIVE STRENGTH MINIMUM OF CONCRETE SHALL BE 2,500 PSI. CRC SECTION R404.1.2.3.1

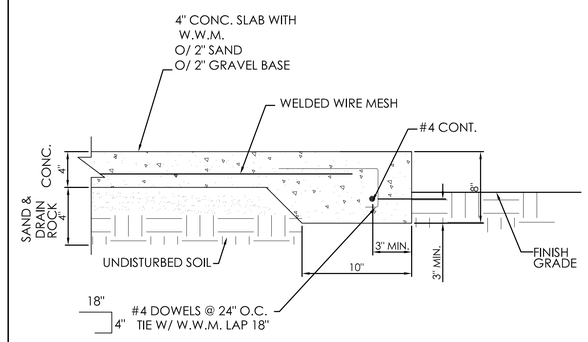

LANDING 8

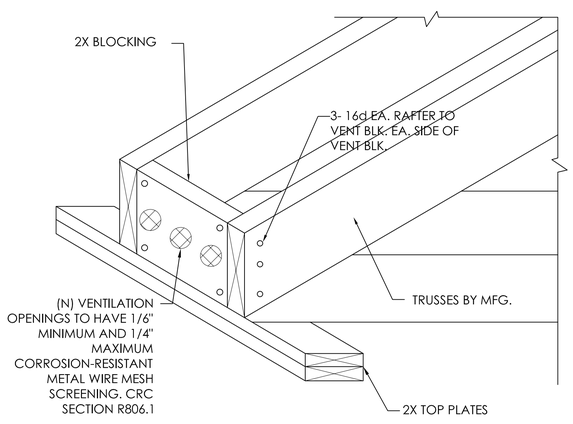

VENT BLOCKING N.T.S. 12

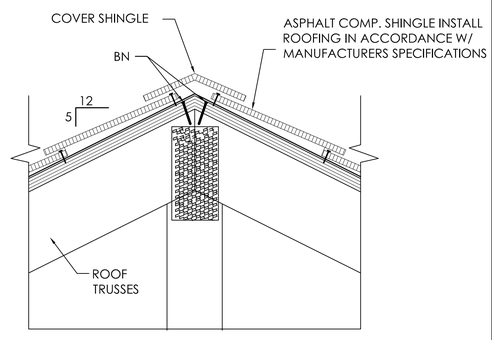

RIDGE N.T.S. 11

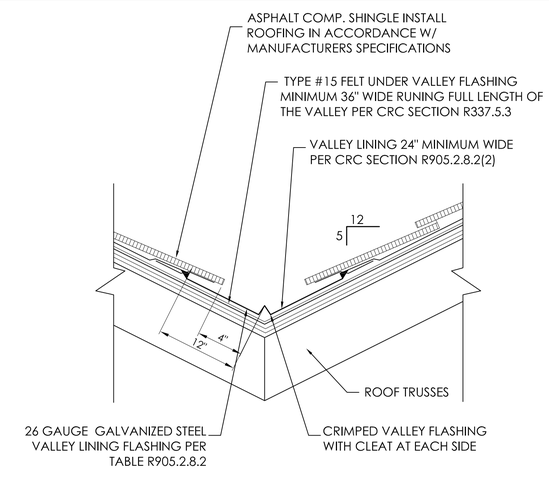

VALLEY N.T.S. 10

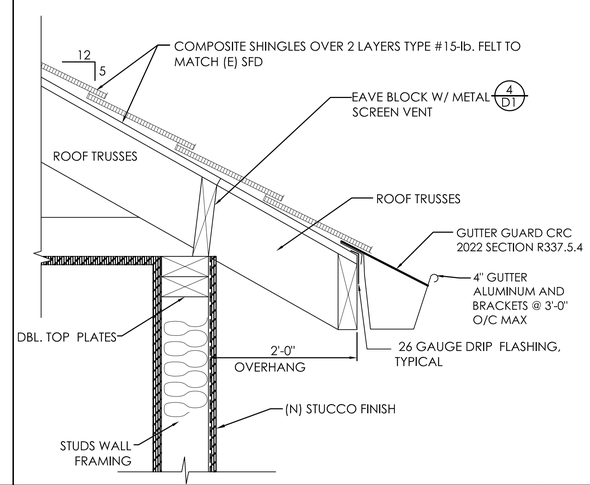

EAVE N.T.S. 9

E & L
BUILDING DESIGN STUDIO
150 CAYUGA ST. SUITE I
SALINAS, CA. 93901
O: (831)250-8069
e_ldesigns@hotmail.com

REVISION
DATE:
BY:
0

38 CLAUSEN ROAD

38 CLAUSEN ROAD
WATSONVILLE, CA. 95076
A.P.N.: 119-221-002-000

TITLE: TYPICAL DETAILS

SCALE: N.T.S.

DATE: 5/22/24

JOB NUMBER: 23-54

PAGE: D1

THE USE OF THESE PLANS AND SPECIFICATIONS SHALL BE RESTRICTED TO THE ORIGINAL SITE FOR WHICH THEY WERE PREPARED AND PUBLICATION THEREOF IS EXPRESSLY LIMITED TO SUCH USE. REUSE, REPRODUCTION, OR PUBLICATION BY ANY METHOD, IN WHOLE OR IN PART, IS PROHIBITED. TITLE TO THE PLANS AND SPECIFICATIONS REMAINS WITH THE DESIGNER, AND VISUAL CONTACT WITH THEM CONSTITUTES PRIMA FACE EVIDENCE OF THE ACCEPTANCE OF THESE RESTRICTIONS.

MONTEREY COUNTY
HOUSING AND COMMUNITY DEVELOPMENT
Erik V. Lundquist, AICP, Director

HOUSING, PLANNING, BUILDING, ENGINEERING, ENVIRONMENTAL SERVICES
1441 Schilling Place, South 2nd Floor
Salinas, California 93901-4527
(831)755-5025
www.co.monterey.ca.us

STATEMENT OF SPECIAL INSPECTIONS

SITE ADDRESS	38 CLAUSEN ROAD	APN 119-221-002-000	BP#
Owner	RODOLFO JIMENEZ	Contractor	
Address	38 CLAUSEN ROAD	Address	
City/St	WATSONVILLE, CA Zip 95076 Phone (831) 320-4377	City/St Zip Phone	
Petitioner	RODOLFO JIMENEZ	Engineer/Architect	
Address	38 CLAUSEN ROAD	Address	
City/St	WATSONVILLE, CA Zip 95076 Phone (831) 320-4377	City/St Zip Phone	
PROJECT DESCRIPTION:	LOWER FLOOR 3 CAR GARAGE ADDITION UPPER FLOOR ADDITION NEW DECK	1,407 S.F. 1,210 S.F. 320 S.F.	

This "STATEMENT OF SPECIAL INSPECTIONS" is submitted in fulfilment of the requirements of CBC Sections 1704 and 1705. This form is structured after and used by permission from the Structural Engineers Association of Northern California's (SEAONC) model statement of Special Inspections. Also included shall be the following:

- [x] "LIST OF TESTING AGENCIES" (page 2). A list of the testing agencies and other special inspectors that will be retained to conduct the tests and inspections for this project. ADVANCED TESTING INSPECTIONS
- [x] "SCHEDULE OF SPECIAL INSPECTION" (page 3 - 6). The Schedule of Special Inspections summarizes the Special Inspections and tests required. Special Inspectors will refer to the approved plans and specifications for detailed special inspection requirements. Any additional tests and inspections required by the approvec plans and specifications will also be performed. EPOXY / DOWELS

Special Inspections and Testing will be performed in accordance with the approved plans and specifications, this statement and CBC sections 1704, 1705, 1707, and 1708. Interim reports will be submitted to the Director of Building Services and the Registered Design Professional in Responsible Charge in accordance with CBC Section 1704.1.2

A Final Report of Special Inspections documenting required Special Inspections, testing and correction of any discrepancies noted in the inspections shall be submitted prior to issuance of a Certificate of Use and Occupancy (Section 1704.1.2). The Final Report will document:

- Required special inspections.
- Correction of discrepancies noted in inspections.

The Owner recognizes his or her obligation to ensure that the construction complies with the approved permit documents and to implement this program of special inspections. In partial fulfillment of these obligations, the Owner will retain and directly pay for the Special Inspections as required in CBC Section 1704.1.

This plan has been developed with the understanding that the Director of Building Services will:

- Review and approve the qualifications of the Special Inspectors who will perform the inspections.
- Monitor special inspection activities on the job site to assure that the Special Inspectors are qualified and are performing their duties as called for in this Statement of Special Inspection.
- Review submitted inspection reports.
- Perform inspections as required by the local building code.

I have read and agree to comply with the terms and conditions of this statement

Prepared By: ☒ Designer ☐ Project ☐ Engineer ☐ Architect: Registered Design Professional in Charge	Signature:	Lic #:	Date: 1/5/24
Owner Name: RODOLFO JIMENEZ Owner's Authorization	Signature: RODOLFO JIMENEZ		Date: 1/5/24
Inspection Agency / Inspector Name: MOE TAVAKOLIAN	Signature: MTAVAKOLIAN		Date: 1/5/24
Building Official: Building Official's Acceptance	Signature:		Date:

BSD-FO-040/Special Inspection Form/07/07/21

LIST OF SPECIAL INSPECTION AGENCIES

APPROVAL OF SPECIAL INSPECTORS:
Each special inspection agency, testing facility, and special inspector shall be recognized by the Director of Building prior to performing any duties. Special Inspection agency's listed on this form must be pre-approved and listed on Monterey County's approved Special Inspector's list. Special inspectors shall carry approved identification when performing the functions of a special inspector and call the Building Services Department each day the special inspection is performed. Identification cards shall follow the criteria set by the California Council of Testing and Inspection Agencies. No personnel changes shall be made without first obtaining the approval of the Building Official. Any unauthorized personnel changes may result in a "Stop Work Order" and possible permit revocation. To be pre-approved by Monterey County, a company profile including resumes of all employees, their certifications and a list of the types of work for which recognition is requested shall be submitted to the Director of Building for review. The initial processing fee is $300 per agency with an annual renewal fee of $100. Please allow two weeks to complete the application process.

The following are the testing and special inspection agencies that will be retained to conduct tests and inspection on this project:

EXPERTISE	FIRM / INSPECTOR INFORMATION *
1. Special Inspection (except for geotechnical) ATI ADVANCE TESTING & INSPECTION A.T.I.	Firm A.T.I. Addr 540 BRUNKEN AVE. #B City SALINAS State CA Zip 93901 Telephone (831) 422-2272 Fax Email atitesting@gmail.com
2. Material Testing	Firm Addr City State Zip Telephone Fax Email
3. Geotechnical Inspections	Firm Addr City State Zip Telephone Fax Email
4. Other: _____	Firm Addr City State Zip Telephone Fax Email

*All agencies specified on this form must be pre-approved and listed on Monterey County's Approved Special Inspector's List.

SEISMIC REQUIREMENTS (Section 1705.3.1)

Description of seismic-force-resisting system and designated seismic systems subject to special inspections as per Section 1705.3:

EPOXY GROUTED DOWEL PINS & BOLTS

The extent of the seismic force-resisting system is defined in more detail in the construction documents.

WIND REQUIREMENTS (Section 1705.4.1)

Description of main wind-force-resisting system and designated wind resisting components subject to special inspections in accordance with Section 1705.4.2:

The extent of the main wind-force-resisting system and wind resisting components is defined in more detail in the construction documents.

SITE ADDRESS:	38 CLAUSEN ROAD	APN: 119-221-002-000
PROJECT DESCRIPTION:	LOWER FLOOR 3 CAR GARAGE ADDITION 1,407 S.F. UPPER FLOOR ADDITION 1,210 S.F. NEW DECK 320 S.F.	

Notation Used in Table:

Column headers:
C Indicates continuous inspection is required
P Indicates periodic inspections are required. The notes and or contract documents should clarify.

Box entries:
X Is placed in the appropriate column to denote either "C" continuous or "P" periodic inspections.
--- Denotes an activity that is either a one-time activity or one whose frequency is defined in some other manner.

Additional detail regarding inspections and tests are provided in the project specifications or notes on the drawings.

Code Section	Verification and Inspection	C	P	NOTES
	1704 – SPECIAL INSPECTIONS			
1704.2.1	☐ Inspect fabricator's fabrication and quality control procedures.	---	---	
Table 1704.3 STEEL	1. Material verification of high-strength bolts, nuts, and washers.			
	☐ Identification markings to conform to ASTM stds specified in the approved construction documents.		X	
	☐ Manufacturer's certificate of compliance required.		X	
	2. Inspection of high-strength bolting:			
	☐ Bearing-type connections.		X	
	☐ Slip-critical connections	X	X	
	3. Material verification of structural steel:			
	☐ Identification markings to conform to ASTM stds specified in the approved construction documents.	---	---	
	☐ Manufacturer's mill test reports	---	---	
	4. Material verification of weld filler materials:			
	☐ Identification markings to conform to AWS designation listed in the WPS	---	---	
	☐ Manufacturer's certificate of compliance required.	---	---	
	5. Inspection of welding for Structural steel			
	☐ Complete and partial penetration groove welds.	X		
	☐ Multipass fillet welds.	X		
	☐ Single-pass fillet welds > 5/16"	X		
	☐ Single-pass fillet welds ≤ 5/16"		X	
	☐ Floor and roof deck welds.		X	
	6. Inspection of welding for Reinforcing steel			
	☐ Verification of weldability of reinforcing steel other than ASTM A706.		X	
	☐ Reinforcing steel-resisting flexural and axial forces in intermediate and special moment frames, and boundary elements of special reinforced concrete shear walls, and shear reinforcement.	X		
	☐ Shear reinforcement.	X		
	☐ Other reinforcing steel		X	
	7. Inspection of steel frame joint details for compliance with approved construction documents: a. Details such as bracing and stiffening. b. Member locations. c. Application of joint details at each connection.		X	
1704.3 WELDING	1. ☐ Welded studs when used for structural diaphragms.		X	
	2. ☐ Welding of cold-formed sheet steel framing members.		X	
	3. ☐ Welding of stairs and railing systems.		X	

Code Section	Verification and Inspection	C	P	NOTES
1704.4 CONCRETE	1. ☐ Inspection of reinforcing steel, including prestressing tendons and placement.		X	
	2. ☐ Inspection of reinforcing steel welding in accordance with Table 1704.3 Item 5b.	---	---	
	3. ☒ Inspect bolts to be installed in concrete prior to and during placement of concrete where allowable loads have been increased.	X		EPOXY GROUTED DOWEL PINS & BOLTS
	4. ☐ Verifying use of required design mix.		X	
	5. ☐ At time fresh concrete is sampled to fabricate specimens for strength tests, perform slump and air content tests and determine the temperature of the concrete.	X		
	6. ☐ Inspection of concrete and shotcrete placement for proper application techniques.	X		
	7. ☐ Inspection for maintenance of specified curing temperature and techniques.		X	
	8. Inspection of prestressed concrete			
	☐ Application of prestressing forces.	X		
	☐ Grouting of bonded prestressing tendons in the seismic force-resisting system.	X		
	9. ☐ Erection of precast concrete members.		X	
	10. ☐ Verification of in-situ concrete strength, prior to stressing of tendons in postensioned concrete and prior to removal of shores and forms from beams and structural slabs.		X	
	11. ☐ Inspect formwork for shape, location, and dimensions of the concrete member being formed.		X	
Table 1704.5.1 LEVEL 1 MASONRY INSPECTIONS	1. At the start of masonry construction verify the following to ensure compliance:			
	☐ Proportions of site-prepared mortar.		X	
	☐ Construction of mortar joints.		X	
	☐ Location of reinforcement, connectors, prestressing tendons, and anchorages.		X	
	☐ Prestressing technique.		X	
	☐ Grade and size of prestressing tendons and anchorages.		X	
	2. Verify:			
	☐ Size and location of structural elements.		X	
	☐ Type, size, and location of anchors, including other details of anchorage of masonry to structural members, frames or other construction.		X	
	☐ Specified size, grade, and type of reinforcement.		X	
	☐ Welding of reinforcing bars.	X		
	☐ Protection of masonry during cold weather (temperature below 40 degrees F) or hot weather (temperature above 90 degrees F)		X	
	☐ Application and measurement of prestressing force.		X	
	3. Prior to grouting verify the following to verify compliance:			
	☐ Grout space is clean.		X	
	☐ Placement of reinforcement and connectors and prestressing tendons and anchorages.		X	
	☐ Proportions of site-prepared grout and prestressing grout for bonded tendons.		X	
	☐ Construction of mortar joints.		X	
	4. Grouting:			
	☐ Verify grout placement to ensure compliance with code and construction document provisions.	X		
	☐ Observe grouting of prestressing bonded tendons.	X		

Code Section	Verification and Inspection	C	P	NOTES
	5. ☐ Observe preparation of required grout specimens, mortar specimens, and/or prisms.	X		
	6. ☐ Verify compliance with required inspection provisions of the construction documents and the approved submittals.		X	
Table 1704.5.3 LEVEL 2 MASONRY INSPECTIONS	1. From the beginning of masonry construction the following shall be verified to ensure compliance:			
	☐ Proportions of site-prepared mortar, grout, and prestressing grout for bonded tendons.		X	
	☐ Placement of masonry units and construction of mortar joints.		X	
	☐ Placement of reinforcement, connectors and prestressing tendons and anchorages.		X	
	☐ Grout space prior to grouting.	X		
	☐ Placement of grout.	X		
	☐ Placement of prestressing grout.	X		
Table 1704.5.3 LEVEL 2 MASONRY INSPECTIONS	2. Verify			
	☐ Size and location of structural elements.		X	
	☐ Type, size, and location of anchors, including other details of anchorage of masonry to structural members, frames and other construction.	X		
	☐ Specified size, grade, and type of reinforcement.		X	
	☐ Welding of reinforcing bars.	X		
	☐ Protection of masonry during cold weather (temperature below 40 degrees F) or hot weather (temperature above 90 degrees F).		X	
	☐ Application and measurement of prestressing force.	X		
	3. ☐ Preparation of any required grout specimens, mortar specimens, and/or prisms shall be observed.	X		
	4. ☐ Compliance with required provisions of construction documents and the approved submittals shall be verified.		X	
1704.6	1. ☐ Inspect prefabricated wood structural elements and assemblies in accordance with Section 1704.2	---	---	
	2. ☐ Inspect site built assemblies.	---		
1704.6.1 HIGH-LOAD DIAPHRAGMS	1. ☐ Verify grade and thickness of sheathing.	---		
	2. ☐ Verify nominal size of framing members at adjoining panel edges.	---		
	3. ☐ Verify: a. Nail or staple diameter and length, b. Number of fastener lines, c. Spacing between fasteners in each line and at edge margins.	---	---	
Table 1704.7 SOILS	1. ☐ Verify materials below footings are adequate to achieve the desired bearing capacity.		X	
	2. ☐ Verify excavations are extended to proper depth and have reached proper material.		X	
	3. ☐ Perform classification and testing of controlled fill materials.		X	
	4. ☐ Verify use of proper materials, densities and lift thicknesses during placement and compaction of controlled fill.	X		
	5. ☐ Prior to placement of controlled fill, observe subgrade and verify that site has been prepared properly.		X	
Table 1704.8 PILE FOUNDATIONS	1. ☐ Verify pile materials, sizes and lengths comply with the requirements.	X		
	2. ☐ Determine capacities of test piles and conduct additional load tests, as required.	X		
	3. ☐ Observe driving operations and maintain complete and accurate records for each pile.	X		

BSD-FO-040/Special Inspection Form/06-12-17

Code Section	Verification and Inspection	C	P	NOTES
Table 1704.8 PILE FOUNDATIONS	4. ☐ Verify locations of piles and their plumbness: a. Confirm type and size of hammer. b. Record number of blows per foot of penetration. c. Determine required penetrations to achieve design capacity. d. Record tip and but elevations and record any pile damage.	X		
	5. ☐ For steel piles, perform additional inspections in accordance with Section 1704.3.	---	---	
	6. ☐ For specialty piles, perform additional inspections as determined by the registered design professional in responsible charge.	---	---	
	7. ☐ For augered uncased piles and caisson piles, perform inspections in accordance with Section 1704.9.	---	---	
Table 1704.9 PIER FOUNDATIONS	1. ☐ Observe drilling operations and maintain complete and accurate records for each pier.	X		
	2. ☐ Verify locations of piers and their plumbness. Confirm: a. Pier diameters, b. Bell diameters (if applicable), c. Lengths, embedment into bedrock (if applicable), d. Adequate end strata bearing capacity.	X		
1704.10 SPRAYED FIRE-RESISTANT MATERIAL	1. ☐ Inspect surface for accordance with the approved fire-resistance design and the approved manufacturer's written instructions.	---	---	
	2. ☐ Verify minimum ambient temperature before and after application.	---	---	
	3. ☐ Verify ventilation of area during and after application.		X	
	4. ☐ Measure average thickness per ASTM E605 and Section 1704.10.3.	---	---	
	5. ☐ Verify density of material for conformance with the approved fire-resistant design and ASTM E605.	---	---	
	6. ☐ Test cohesive/adhesive bond strength per Section 1704.10.5.	---	---	
1704.11	☐ Mastic and Intumescent Fire-Resistant Coating	---	---	
1704.12	☐ Exterior Insulation and Finish Systems (EIFS)	---	---	
1704.13	☐ Alternate Materials and Systems	---	---	
1704.14	☐ Smoke Control System	---	---	
	SECTION 1705 – STATEMENT OF SPECIAL INSPECTIONS			
1705.3.4 [4.3] SEISMIC	☐ Suspended ceiling systems and their anchorage.	---	---	
1705.4.2 WIND	1. ☐ Roof cladding and roof framing connections.	---	---	
	2. ☐ Wall connections to roof and floor diaphragms and framing.	---	---	
	3. ☐ Roof and floor diaphragm systems, including collectors, drag struts and boundary elements	---	---	
	4. ☐ Vertical wind-force-resisting systems, including braced frames, moment frames, and shear walls.	---	---	
	5. ☐ Wind-force-resisting system connections to the foundation.	---	---	
	6. ☐ Fabrication and installation of systems or components required to meet the impact resistance requirements of Section 1609.1.2.	---	---	

BSD-FO-040/Special Inspection Form/06-12-17

	C	P	NOTES
SECTION 1707 - SPECIAL INSPECTION FOR SEISMIC RESISTANCE			
1707.2 ☐ Special inspection for welding in accordance with AISC 341.	X		
1707.3 WOOD: ☐ Inspect field gluing operations of elements of the seismic-force-resisting system.	X		
1707.3 WOOD: ☐ Inspect nailing, bolting, anchoring, and other fastening of components within the seismic-force-resisting system, including: a. wood shear walls, b. wood diaphragms, c. drag struts, braces, d. shear panels, e. hold-downs.		X	
1707.4 COLD-FORMED STEEL FRAMING: ☐ Welding of elements of the seismic-force-resisting system.		X	
1707.4 COLD-FORMED STEEL FRAMING: ☐ Inspection of screw attachments, bolting, anchoring, and other fastening of components within the seismic-force-resisting system including struts, braces, and hold-downs.		X	
1707.5 PIER FOUNDATIONS: 1. ☐ Placement of reinforcing		X	
2. ☐ Placement of concrete	X		
1707.6 ☐ Anchorage of storage racks and access floors 8 feet or greater in height.		X	
1707.7 ARCHITECTURAL COMPONENTS: 1. ☐ Inspect erection and fastening of exterior cladding weighing more than 5 psf.		X	
2. ☐ Inspect erection and fastening of interior and exterior non-bearing walls weighing more than 15 psf.		X	
3. ☐ Inspect erection and fastening of interior and exterior veneer weighing more than 5 psf.		X	
1707.8 MECHANICAL AND ELECTRICAL COMPONENTS: 1. ☐ Inspect anchorage of electrical equipment for emergency or stand-by power systems.		X	
2. ☐ Inspect anchorage of non-emergency electrical equipment.		X	
3. ☐ Inspect installation of piping systems and associated mechanical units carrying flammable, combustible, or highly toxic contents.		X	
4. ☐ Inspect installation of HVAC ductwork that contains hazardous materials.		X	
5. ☐ Inspect installation of vibration isolation systems where required by Section 1707.8.		X	
1707.9 ☐ Verify that the equipment label and anchorage or mounting conforms to the certificate of compliance when mechanical and electrical equipement must be seismically qualified.	---	---	
1707.10 ☐ Seismic isolation system. Inspection of isolation system per ASCE 7 – Section 17.2.4.8		X	
SECTION 1708.1 - STRUCTURAL MASONRY TESTING FOR SEISMIC RESISTANCE			
1708.1.1 ☐ Verify certificates of compliance prior to construction.	---	---	
1708.1.2 ☐ Verification of f'_m and f'_{AAC} prior to construction.	---	---	
1708.1.4 ☐ Verification of f'_m and f'_{AAC} every 5000 square feet during construction.		X	
1708.1.4 ☐ Verification of proportions of materials in mortar and grout as delivered to the site.	---	---	
1708.3 ☐ Obtain mill certificates for reinforcing steel, verify compliance with approved construction documents, and verify steel supplied corresponds to certificate.	---	---	
1708.4 ☐ Structural Steel: Invoke the QAP Quality Assurance requirements in AISC 341.	---	---	
1708.5 ☐ Obtain certificate that equipment has been tested per Section 1708.5.	---	---	
1708.6 ☐ Obtain system tests as required by ASCE 7 Section 17.8.	---	---	

E & L
BUILDING DESIGN STUDIO
150 CAYUGA ST. SUITE I
SALINAS, CA. 93901
O: (831)250-8069
e_ldesigns@hotmail.com

REVISION DATE: BY: 0

38 CLAUSEN ROAD
38 CLAUSEN ROAD
WATSONVILLE, CA. 95076
A.P.N.: 119-221-002-000

TITLE: TYPICAL DETAILS
SCALE: N.T.S.

DATE: 5/22/24

JOB NUMBER: 23-54

PAGE: D2

THE USE OF THESE PLANS AND SPECIFICATIONS SHALL BE RESTRICTED TO THE ORIGINAL SITE FOR WHICH THEY WERE PREPARED AND PUBLICATION THEREOF IS EXPRESSLY LIMITED TO SUCH USE. REUSE, REPRODUCTION, OR PUBLICATION BY ANY METHOD, IN WHOLE OR IN PART, IS PROHIBITED. TITLE TO THE PLANS AND SPECIFICATIONS REMAINS WITH THE DESIGNER, AND VISUAL CONTACT WITH THEM CONSTITUTES PRIMA FACE EVIDENCE OF THE ACCEPTANCE OF THESE RESTRICTIONS.

MontereyCounty
Housing and Community Development
Permit Center
1441 Schilling Place South, Second Floor, Salinas CA 93901
Phone: (831)755-5025 – Fax 757-9516

Construction & Demolition - Waste Reduction and Recycling Plan

Permit #_____ Date 1/5/24

Site Address: 38 CLAUSEN ROAD Zip Code 95076

Company/Owner Name: RODOLFO JIMENEZ

Mailing Address: 38 CLAUSEN ROAD Contact Phone: (831) 320-4377

City, State and Zip: WATSONVILLE, CA. 95076 E-mail: Kjimenez11428@gmail.com

Type of Project: ☐New Construction ☒Alteration ☐Demolition ☐Roofing ☐Other

Project Description: LOWER FLOOR 3 CAR GARAGE ADDITION 1,407 S.F.
UPPER FLOOR ADDITION 1,210 S.F.
NEW DECK 320 S.F.

1. **What materials will be generated by your project?**

	Asphalt		Bricks/Rock	X	Cardboard
X	Concrete/Cement	X	Dirt/Clean Fill	X	Drywall/Sheetrock
X	Glass/Windows	X	Lumber/Wood	X	Metals
X	Mixed C&D		Roofing Materials		Salvaged Items
	Other (Specify)				

2. **How will the C&D debris be handled during your project? (Please check all that apply)**
   Source Separation – Materials are separated on-site and placed in material-specific bins.
   Mixed Loads – Clean recyclable C&D materials are comingled into one bin and delivered to a processing facility. Trash is collected in a separate bin and delivered to an authorized disposal facility.
3. **How do you plan to dispose of the C&D debris that you will generate with your project?**
   - ☐ I will hire the exclusive franchise hauler. Save Invoices!
   - ☒ I will self-haul C&D debris using the owner/contractor's equipment and vehicles. Save All Receipts!
4. **ATTEST: By signing below I am affirming:**
   - I am the owner/agent for this permit application and have read the requirements of the ordinance.
   - I will submit a Waste Reduction & Recycling Plan with the permit application, and, to the best of my ability, I agree to recycle, divert and/or salvage the materials listed above;
   - I will submit a Waste Reduction & Recycling Report describing diversion activities and showing actual tonnage data for all diverted and disposed materials.
   - I understand that failure to comply with the County of Monterey C&D recycling and reporting requirements may result in legal enforcement and penalties and may delay issuance of permits, the Certificate of Occupancy or approval of the final inspection.

RODOLFO JIMENEZ 1/5/24 RODOLFO JIMENEZ
Applicant's Signature Date Print Name/Title (owner, contractor, agent)

MontereyCounty
Housing and Community Development
Permit Center
1441 Schilling Place South, Second Floor, Salinas CA 93901
Phone: (831)755-5025 – Fax 757-9516

Construction & Demolition - Waste Reduction and Recycling Report

Complete this recycling report, ***ALWAYS keep invoices, weight tickets and receipts***. Use the attached conversion table for help with calculations and attach additional sheets if necessary.

ADDRESS: 38 CLAUSEN ROAD PERMIT NUMBER _____

MATERIAL TYPE	RECYCLED, REUSED, SALVAGED	DISPOSAL	SOURCE SEPARATED	MIXED	HAULER	MATERIAL DESTINATION
Inert Materials						
Example: Concrete	*18.43 tons*	*N/A*	*X*		*Self-Haul*	*Johnson Canyon Landfill*
Asphalt		N/A				
Brick / Rock		N/A				
Concrete / Cement		N/A				
Dirt / Clean fill		N/A				
Roofing materials		N/A				
Other:		N/A				
Other:		N/A				
INERT TOTAL		100% Diversion				
	A	B				
C&D Debris						
Cardboard						
Drywall / Sheetrock						
Glass / Windows						
Lumber / Wood (clean)						
Metal						
Mixed C&D materials*						
Plastic						
Trash						
Yard waste / Landscaping						
Other:						
Other:						
C&D DEBRIS TOTAL			C&D Debris Diversion Rate (percentage) (A)/(A+B) x 100		Over 65% = C&D DEBRIS COMPLIANCE	

*If C&D materials are mixed, please list recyclable materials in the space below and enter the total tons in the *Mixed C&D Materials* section.

Mixed C&D Materials:

Explanation /Comments:

I have accurately reported all diverted and dispose materials above. Failure to file recycling reports with the County of Monterey may result in non-compliance fees and/or delay issuance of the Certificate of Occupancy or final inspection.

Signature: *RODOLFO JIMENEZ* **Date:** 1/5/24

Materials Recovery Facility Construction Project Closure Notice

Mixed Loads Requiring 65% Diversion

The Monterey Regional Waste Management District can transfer all mixed loads requiring 65 percent diversion to Zanker's facility in San Jose.

The cost of this transfer will be $90 per ton.

Customers utilizing this service will receive an extra LEED (Leadership in Energy and Environmental Design) point.

Once MRWMD's MRF upgrade is completed, the facility will accept mixed construction and demolition material that requires at least 65 percent diversion.

Limited Access to MRF Until Dec. 2017

The Monterey Regional Waste Management District's materials resource facility is currently undergoing an upgrade causing closure of certain areas during construction.

Customers will be accommodated whenever possible but should be prepared to be redirected to another recycling and disposal facility.

The MRF is expected to be fully operational by December 2017.

The following materials will continue to be accepted during this construction project:

Asphalt	**Metal**
Concrete	**Wood** (unpainted, untreated)
Drywall	**Yard Trimmings**
Rock	**Recyclables**
Brick	**Reusable Items**

Please contact MRWMD at 831-264-6917 for additional information about the closure.

Maximize Your Project's Diversion Rate: Simple Tips to Ensure You Recycle Right

The easiest way to ensure you reach your construction and demolition recycling diversion goals is to sort materials at your site.

Source separation can be accomplished with a little planning. Waste Management can help. Follow these simple steps to maximize diversion:

- Determine the types of materials that will be generated at the job site.
- Order separate dumpsters for the following clean materials: concrete, wood, soil, other recyclable materials.
- Order separate dumpsters for hard to recycle materials such as: fiberglass insulation, romex cable or wire, ice plant and poison oak.
- Call Waste Management for assistance.

Materials Requiring Special Handing

Certain materials at a job site will require special handling and may not be accepted. Following is a list of some common materials that are not accepted in traditional construction and demolition disposal programs:

Products with Mercury	**Contaminated Soils**
Paints and Paint Products	**Nonfriable Asbestos**
Liquid Waste	

Hazardous Materials

If your construction site will generate hazardous materials please contact the Monterey County Environmental Health Department, Hazardous Materials Management Services.

831-755-4511 or www.mtyhd.org

East Monterey County Construction and Demolition Recycling

Waste Management Can Help Monterey County Builders Meet Recycling Requirements for County Building Permits

Proper separation of recyclable & non-recyclable construction & demolition (C&D) material will help you reach the required 65% diversion goal of the state of California's Green Building Standards Code (CalGreen) and help Monterey County meet State waste reduction and recycling mandates. Waste Management is Monterey County's exclusive waste hauler. We offer 20, 30 and 40-yard containers for both recyclable and non-recyclable C&D materials. When ordering construction containers for your job site, our helpful staff will guide you on the optimal sorting methods and container types and sizes for your construction site based on the kind of materials generated. To keep your disposal costs to a minimum, place all recyclable materials in separate containers from non-recyclable materials at the job site. It is your responsibility to instruct workers, vendors and subcontractors on proper use of the various container types.

Recyclable materials vary depending on the location of your project in the County; this flyer is specific to construction projects located in the areas of Salinas and Salinas Valley areas of the County.

On site source separation is the best way to achieve the highest diversion rate.

RECYCLABLE C&D MATERIALS

Wood: Untreated/painted Pallets, Dimensional Lumber & Crates.
Tree Debris: Trunks, Branches, & Trimmings
Metal: Ductwork, Rebar, Other Ferrous & Non-Ferrous Metals
Inerts: Concrete, Asphalt, Bricks, Rocks, Gravel, Tile, Roofing Tiles & Other Aggregates
Fines: Dirt & Sand
Consumer Recyclables: Aluminum, Plastic & Glass Bottles/Cans, Cardboard & Paper
Asphalt Shingles
Clean Drywall
Carpet & Carpet Padding

SPECIAL HANDLING

These materials should be collected separately and can be self-hauled to a disposal site near you.

Appliances	**Mattresses**	**Pressure Treated Wood**
Ceiling Tiles	**Sheetrock**	**Yard Waste**
Electronics	**Tires**	

HAZARDOUS MATERIALS

Call your local household hazardous waste collection site for disposal information:

Adhesives	**Paint**
Batteries	**Used Oil**
Chemicals	**Vehicle & Equipment Fluids**
Mercury-containing products (Fluorescent bulbs, thermostats, etc.)	

Follow these recommendations to maximize diversion and minimize cost.
http:// svswa.org/commercial/construction-and-demolition/

Please retain all waste related invoices and weight receipts for all waste materials generated at your job site.
Monterey County Building Services will require these for the permitting process.

If you have any questions, contact us at 1-800-321-8226

WASTE MANAGEMENT

CONSTRUCTION & DEMOLITION WASTE REDUCTION AND RECYCLING GUIDE

N.T.S. 1

E & L
BUILDING DESIGN STUDIO
150 CAYUGA ST.
SUITE I
SALINAS, CA. 93901
O: (831)250-8069
e_ldesigns@hotmail.com

REVISION 0
DATE:
BY:

38 CLAUSEN ROAD
38 CLAUSEN ROAD
WATSONVILLE, CA. 95076
A.P.N.: 119-221-002-000

TITLE: TYPICAL DETAILS
SCALE: N.T.S.

DATE: 5/22/24

JOB NUMBER: 23-54

PAGE: D3

THE USE OF THESE PLANS AND SPECIFICATIONS SHALL BE RESTRICTED TO THE ORIGINAL SITE FOR WHICH THEY WERE PREPARED AND PUBLICATION THEREOF IS EXPRESSLY LIMITED TO SUCH USE. REUSE, REPRODUCTION, OR PUBLICATION BY ANY METHOD, IN WHOLE OR IN PART, IS PROHIBITED. TITLE TO THE PLANS AND SPECIFICATIONS REMAINS WITH THE DESIGNER, AND VISUAL CONTACT WITH THEM CONSTITUTES PRIMA FACE EVIDENCE OF THE ACCEPTANCE OF THESE RESTRICTIONS.

MISC. DESIGN NOTES:

DESIGN LOADS:

Dead Loads:	
Class A Comp Roof	6psf
EPO or PVC	3psf
Foam Insulation	1psf
3/4" Sheathing	2psf
2x4 @ 24" o.c.	.6
2x6 @ 24" o.c.	1
Gypsum Wall Board (5/8")	4psf
Roof mechanical	2.5psf
Roof misc	2psf
Roof Insulation	5psf
Roof Live Load:	20psf
Roof Snow Load:	0psf
Floor Live Load:	40psf
Wind Exposure:	B
Basic Wind Speed:	95 mph
ASD Wind Speed:	67
Qz:	17.6 psf
Wind cladding loads:	Toward=10.6psf, Away=14.8psf
Seismic Cs:	0.156
Seismic Category:	D
Seismic Site Class:	D (Assumed)

DESIGN STRENGTHS:

Soil Bearing	1500 psf
Concrete Design Strength:	2500 psi
Minimum Concrete Strength:	2500psi
Reinforcing #5	Grade 60
Reinforcing #4	Grade 40
Miscelaneous Steel	A992, Fy = 50ksi

WELDING:
Conform with AWS specifications.
Welders to be qualified under AWS Specifications.
Weld material: 70 KSI Filler Metal, Unless Noted Otherwise.

Framing Lumber: Douglas-Fir (DF)

GENERAL NOTES

1. ALL WORK SHALL COMPLY WITH APPLICABLE CODES AND TRADE STANDARDS WHICH GOVERN EACH PHASE OF WORK, INCLUDING BUT NOT LIMITED TO: 2022 EDITIONS OF THE C.B.C. (CALIFORNIA BUILDING CODE), C.R.C (CALIFORNIA RESIDENTIAL CODE), C.M.C. (CALIFORNIA MECHANICAL CODE), C.P.C. (CALIFORNIA PLUMBING CODE), UNIFORM BUILDING SECURITY CODE, TITLE 24, C.E.C. (CALIFORNIA ELECTRICAL CODE), C.E.C. (CALIFORNIA ENERGY CODE) AND THE CALIFORNIA GREEN BUILDING STANDARDS CODE.
2. THE CONTRACTOR SHALL CAREFULLY INSPECT ALL EXCAVATION WORK FOR COMPLIANCE TO REQUIREMENTS OF THE PREVAILING BUILDING CODE. SHOULD ANY CONDITIONS APPEAR QUESTIONABLE DUE TO EXCESSIVE DAMPNESS, GRANULAR COMPOSITION, SLUFFING, SOFTNESS OR OTHER DEFECT, THE CONTRACTOR SHALL CONTACT THE ENGINEER.
3. ALL INFORMATION PERTAINING TO THE SITE SHALL BE AND SHALL REMAIN THE OWNERS RESPONSIBILITY. THIS INFORMATION SHALL INCLUDE LEGAL DESCRIPTION, DEED RESTRICTIONS, EASEMENTS, AND POSITION OF EXISTING IMPROVEMENTS, SOILS REPORT AND ALL RELATED DATA. THESE DOCUMENTS HAVE BEEN PREPARED ON THE INFORMATION AVAILABLE TO THE DESIGNER.
4. IT IS THE RESPONSIBILITY OF THE CONTRACTOR AND ALL SUBCONTRACTORS TO CHECK AND VERIFY ALL DIMENSIONS AND CONDITIONS INDICATED ON THE DRAWINGS AND MAKE KNOWN ANY DISCREPANCIES PRIOR TO COMMENCING THEIR WORK.
5. ALL DIMENSIONS SHOWN TAKE PRECEDENCE OVER SCALED DIMENSIONS. ALL DIMENSIONS ARE TO THE FACE STUD, UNLESS OTHERWISE NOTED.
6. CONTRACTOR SHALL READ AND FOLLOW ALL REFERENCED ICC-ES OR OTHER CODE EVALUATION REPORTS FOR INSTALLATION OF ITEMS AS SHOWN. ALTERNATE METHODS OF CONSTRUCTION MAY BE SUBMITTED FOR APPROVAL TO ARCHITECT AND STRUCTURAL ENGINEER WITH APPLICABLE ICC-ES REPORTS.

WEATHER PROTECTION
1. ALL WEATHER EXPOSED SURFACES SHALL HAVE AN APPROVED WEATHER-RESISTIVE BARRIER UNDER THE SIDING, OR BE OF APPROVED WEATHER PROOF PANELS. TWO LAYERS OF 15# FELT OVER PLYWOOD PANELS. R703.2
2. BALCONIES, LANDINGS, EXTERIOR STAIRWAYS, AND SIMILAR SURFACES EXPOSED TO THE WEATHER AND SEALED UNDERNEATH SHALL BE WATERPROOFED WITH ICC APPROVED MATERIALS AND SLOPED A MINIMUM OF 1/4" PER FOOT FOR DRAINAGE.
3. PROVIDE MINIMUM NO. 26 GALVANIZED SHEET GAUGE CORROSION-RESISTANT METAL ON ROOF VALLEY FLASHING, WHICH SHALL ALSO EXTEND AT LEAST 12" FROM THE CENTERLINE EACH WAY. SECTIONS OF FLASHING SHALL HAVE AND END LAP OF NOT LESS THAN 4".

ROOF NOTES:
1. Provide attic cross ventilation: 1/150 of attic area or 1/300 with at least 40% but more than 50% of vents are 3 ft. above eave and balance is at eave. Baffles are required at vents for insulation. Provide minimum of 1" inch of air space between insulation and roof sheathing. (CRC R806)
2. Enclosed rafter spaces shall have 1 inch clear cross ventilation. (Properly sized rafters for insulation) (CRC R806.3)
3. Under floor cross ventilation: minimum 1.0 sq. ft. for each 150 sq. ft. of under floor area. When a class 1 vapor retarder is installed on the ground surface the minimum area of ventilation may be limited to 1sq.ft for each 1,500 square feet of under-floor space. One ventilation opening shall be within three (3) feet of each corner of the building (CRC R408.1). Unvented crawl spaces shall comply with CRC R408.3
4. At least one egress door shall be provided for each dwelling unit, the egress door shall be side hinged with a minimum openable width of 32 inches; the minimum clear openable height shall be 78 inches minimum (other doors shall not be required to comply with these dimensions). Egress doors shall be readily openable from the inside without the use of a key, special knowledge, or effort. (CRC R311.2)
5. Operable windows more than 72" above finish grade with a sill height less than 24" shall have openings not more than 4" apart or needs a compliant guard (may impact 6050 window in bedroom 3). (CRC R312.2)

FOUNDATION NOTES
1. ALL MATERIALS AND METHODS SHALL BE AS SPECIFIED IN THESE NOTES, THE ACCOMPANYING TECHNICAL SPECIFICATIONS, AND CHAPTER 19 OF THE CALIFORNIA BUILDING CODE.
2. MINIMUM SOIL BEARING PRESSURE IS ASSUMED TO BE 1500 PSF IN ACCORDANCE WITH CBC SOIL CLASSIFICATION 5, SANDY SILT OR BETTER. ALL FOOTINGS SHALL EXTEND INTO NATIVE MATERIAL THAT IS FIRM & STABLE. WHERE NATIVE MATERIAL IS NOT APPROPRIATE IT SHALL BE REMOVED AND REPLACED WITH COMPACTED FILL. FILL UNDER BUILDINGS AND PAVED AREAS SHALL BE COMPACTED TO A MINIMUM OF 95% OF MAXIMUM DRY DENSITY. FILLS GREATER THAN 12" DEEP SHALL BE TESTED IN ACCORDANCE WITH LOCAL REQUIREMENTS.
3. ALL CONCRETE SHALL CONTAIN A MINIMUM OF 5 SACKS OF CEMENT PER CUBIC YARD AND ATTAIN A STRENGTH OF 2500 PSI AT 28 DAYS. CONCRETE IN EXTERIOR PORCH SLABS, STEPS & LANDINGS SHALL ATTAIN A STRENGTH OF 2500 PSI AT 28 DAYS.
4. #5 REINFORCING STEEL SHALL CONFORM TO THE REQUIREMENTS OF ASTM A-615, GRADE 60. #4 REINFORCING STEEL SHALL CONFORM TO THE REQUIREMENTS OF ASTM A-615, GRADE 40 LAPPED SPLICING FOR REINFORCING SHALL BE 28 BAR DIAMETERS.
5. ANCHOR BOLTS: FOUNDATION ANCHOR BOLTS SHALL HAVE GALVANIZED STEEL PLATE WASHERS UNDER EACH NUT NOT LESS THAN 0.229"x3"x3" IN SIZE. THE HOLE IN THE PLATE WASHER SHALL BE PERMITTED TO BE DIAGONALLY SLOTTED WITH A WIDTH OF UP TO 3/16" LARGER THAN THE BOLT DIAMETER AND A SLOT LENGTH NOT TO EXCEED 1 3/4", PROVIDED A STANDARD CUT WASHER IS PLACED BETWEEN THE PLATE WASHER AND THE NUT. THE PLATE WASHER SHALL EXTEND TO WITHIN 1/2" OF THE EDGE OF THE BOTTOM PLATE ON THE SIDE(S) WITH SHEATHING OR OTHER MATERIAL WITH NOMINAL UNIT SHEAR CAPACITY GREATER THAN 400 PLF FOR WIND OR SEISMIC.
6. ALL FRAMING HARDWARE SHALL BE "STRONG-TIE" AS MANUFACTURED BY SIMPSON CORPORATION. ICC-ES. APPROVED ALTERNATIVE HARDWARE MAY BE SUBSTITUTED WITH THE APPROVAL OF THE ENGINEER. ALL FRAMING HARDWARE IN CONTACT WITH PRESSURE TREATED LUMBER SHALL BE STAINLESS STEEL, ZMAX OR BATCH POST HOT DIP GALVANIZED. ALL FASTENERS SHALL BE STAINLESS STEEL, BATCH POST HOT DIP GALVANIZED OR MECHANICALLY GALVANIZED.
7. A MINIMUM OF 8" CLEARANCE SHALL BE MAINTAINED BETWEEN EARTH AND ANY UNTREATED LUMBER OTHER THAN REDWOOD.
8. ALL FOOTINGS WHERE THE SURFACE OF THE GROUND SLOPES MORE THAN ONE FOOT IN TEN SHALL BE STEPPED SUCH THAT THE TOP AND BOTTOM OF THE FOOTINGS ARE LEVEL.
9. ALL ANCHORS TO BE EMBEDDED IN CONCRETE, INCLUDING HOLD-DOWNS, SHALL BE TIED IN PLACE PRIOR TO A FOUNDATION INSPECTION AND THE PLACING OF CONCRETE.
10. ALL DRILLED ANCHORS TO BE EMBEDDED IN CONCRETE, INCLUDING HOLD-DOWNS, SHALL BE SIMPSON TITEN HD, STRONGBOLT OR WEDGE-ALL. SIMILAR PRODUCTS BY SIMPSON OR OTHER MANUFACTURERS MAY BE SUBSTITUTED WITH THE PREVIOUS APPROVAL OF THE ARCHITECT AND ENGINEER. NO SPECIAL INSPECTION REQUIRED ON THESE ANCHORS.
11. CONTRACTOR TO VERIFY EXISTING UTILITY LOCATIONS PRIOR TO EXCAVATING. CONTACT UNDERGROUND SERVICE ALERT (USA) AT 811 OR USANORTH811.ORG.
12. SLOPE DRAINAGE 6" WITHIN THE FIRST 10FT. FROM THE FOUNDATION WALL. IF PHYSICAL OBSTRUCTIONS OR LOT LINES PROHIBIT THE 10FT DISTANCE, A 2.5 PERCENT SLOPE SHALL BE PROVIDED TO AN APPROVED ALTERNATIVE METHOD OF DIVERTING THE WATER AWAY FROM THE FOUNDATION. IMPERVIOUS SURFACES SHALL ALSO BE SLOPED A MINIMUM OF 2 PERCENT FOR 10FT AWAY FROM STRUCTURES TO AN APPROVED DRAINAGE WAY. (CRC R401.3)

FRAMING NOTES:
1. ALL FRAMING LUMBER TO BE D.F. #2 OR BETTER. 2X STUDS TO BE D.F. STUD OR BETTER.
2. ALL WOOD IN CONTACT WITH CONCRETE TO BE PRESSURE TREATED.
3. ALL FRAME WALLS SUBJECT TO WATER SPLASH TO HAVE APPROVED WATERPROOF PAPER.
4. BLOCKING REQUIRED BETWEEN JOISTS AT BEARING PARTITIONS.
5. PROVIDE DOUBLE STUDS AT BOTH ENDS OF OPENINGS.
6. ALL EXTERIOR SIDING TO BE MIN. 5/8" UNLESS OVER SHEATHING. ALL EXTERIOR SIDING JOINTS SHALL CENTER OVER FRAMING MEMBERS W/ CONTINUOUS WOOD BATTING OR JOINTS TO BE WATER PROOFED. NAIL ALL SIDING W/ GALVANIZED NAILS.
7. ALL EXTERIOR WALLS TO HAVE TYVEC OR EQUAL MEMBRANE OVER STRUCTURAL SHEATHING AND/OR STUDS.
8. ALL NAILED CONNECTIONS SHALL COMPLY WITH TABLE 2304.10.1 OF THE CALIFORNIA BUILDING CODE, UNLESS OTHERWISE NOTED.
9. ALL FRAMING HARDWARE SHALL BE "STRONG-TIE" AS MANUFACTURED BY SIMPSON CORPORATION. ICC-ES APPROVED ALTERNATIVE HARDWARE MAY BE SUBSTITUTED WITH THE APPROVAL OF THE ARCHITECT/ ENGINEER.
10. ALL FRAMING HARDWARE IN CONTACT WITH PRESSURE TREATED LUMBER SHALL BE STAINLESS STEEL, ZMAX OR BATCH POST HOT DIP GALVANIZED. ALL FASTENERS SHALL BE STAINLESS STEEL, BATCH POST HOT DIP GALVANIZED OR MECHANICALLY GALVANIZED. STAINLESS STEEL CONNECTORS AND FASTENERS ARE PREFERRED IN EXTERIOR LOCATIONS.
11. WALL STUDS SHALL BE CONTINUOUS FROM BOTTOM PLATE TO POINT OF LATERAL SUPPORT AT ROOF, FLOOR, OR CEILING INTERSECTION.
12. ALL DECK HARDWARE (HANGERS, STRAPS) FASTENERS ARE REQUIRED TO BE OF THE SAME MATERIAL OR COATING THAT THE HARDWARE IS.
13. FOR WOOD STRUCTURAL PANEL ROOF SHEATHING ATTACHED TO GABLE END ROOF FRAMING AND TO INTERMEDIATE SUPPORTS WITHIN 48 INCHES OF ROOF EDGES AND RIDGES, NAILS SHALL BE SPACED AT 6 INCHES ON CENTER.
14. TYPICAL HEADER SIZE = 4x12 DF#2 UNLESS OTHERWISE NOTED.

LAYOUT PAGE TABLE	
LABEL	TITLE
1	STRUCTURAL NOTES
2	SHEAR WALL PLAN
3	SHEAR WALL PLAN
4	FOUNDATION PLAN
5	FRAMING PLAN
6	STRUCTURAL DETAILS
7	STRUCTURAL DETAILS
8	STRUCTURAL DETAILS

SIMPSON STRONG TIE SHEETS:
WSWH1.1
WSWH2

STRUCTURAL INSPECTION BY THE ENGINEER:

1. **Foundation excavation, reinforcement and forms** **Periodic**
2. **Framing after mechanical, electrical, and plumbing*** **Periodic**

*Framing inspection includes structural wood. Periodic special inspection is required for nailing, bolting, anchoring and other fastening of components within the seismic-force-resisting system, including wood shear walls (wood diaphragms, drag struts, braces, shear panels and hold-downs.

REGISTERED PROFESSIONAL ENGINEER
JAVED PECHAN
No. 69153
CIVIL
STATE OF CALIFORNIA

REVISION TABLE

LABEL	DATE	DESCRIPTION

PROJECT ADDRESS:
38 Clausen Rd
Watsonville, CA
APN: 119-221-002-000

PLANS PREPARED FOR:
Mr. & Mrs. Rodolfo Jimenez
38 Clausen Rd
Watsonville, CA

STRUCTURAL NOTES

JP Engineering
Javed Pechan P.E. 69153
PO Box 51848
Pacific Grove, CA 93950
Cell: (831) 264-3217
jpeng@live.com

DATE: 12/21/2023

SCALE: AS SHOWN

JOB #: 0636

SHEET
S1
OF S8

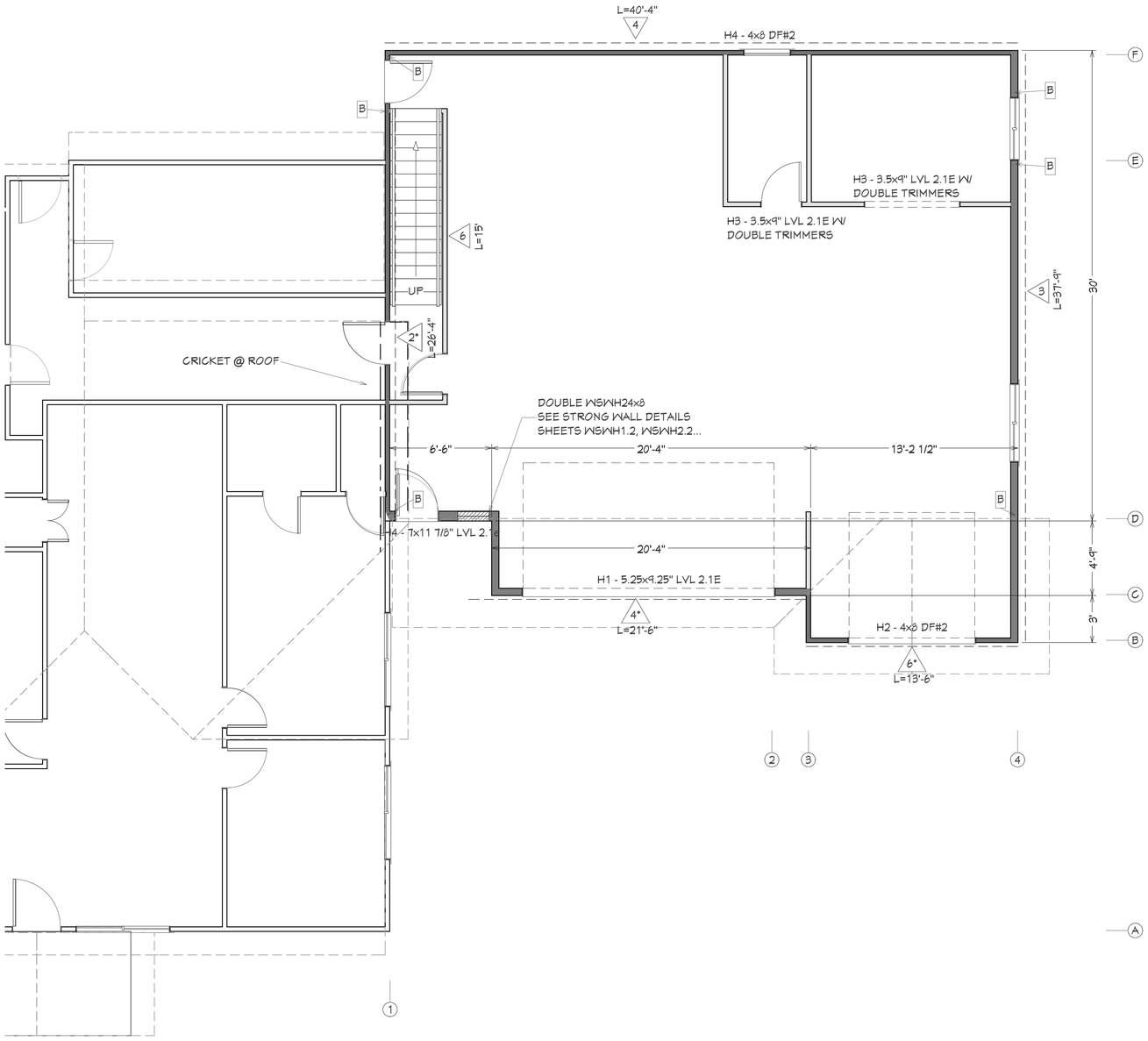

1st FLOOR SHEAR WALL PLAN

SCALE: 1/4" = 1'

LEGEND

- SHEAR WALL, SEE TABLE 4/S7
- FORCE TRANSFER SHEAR WALL WITH SHEAR PLY AND NAILING ABOVE AND BELOW OPENINGS. SEE DETAIL SHEET 3.
- PERFORATED SHEAR WALL WITH SHEAR PLY AND NAILING ABOVE AND BELOW OPENINGS. SEE DETAIL THIS SHEET.
- HOLD DOWN, SEE TABLE 4/S7
- REVISION #, SEE REVISION TABLE

REGISTERED PROFESSIONAL ENGINEER
Jared Pechan
No. 69153
CIVIL
STATE OF CALIFORNIA

REVISION TABLE

LABEL	DATE	DESCRIPTION

PROJECT ADDRESS:
36 Clausen Rd
Watsonville, CA
APN: 119-221-002-000

PLANS PREPARED FOR:
Mr. & Mrs. Rodolfo Jimenez
36 Clausen Rd
Watsonville, CA

SHEAR WALL PLAN

JP Engineering
Jared Pechan P.E. 69153
PO Box 51848
Pacific Grove, CA 93950
Cell: (831) 264-3217
jpengr@live.com

DATE: 12/21/2023

SCALE: AS SHOWN

JOB #: 0636

SHEET
S2
OF S8

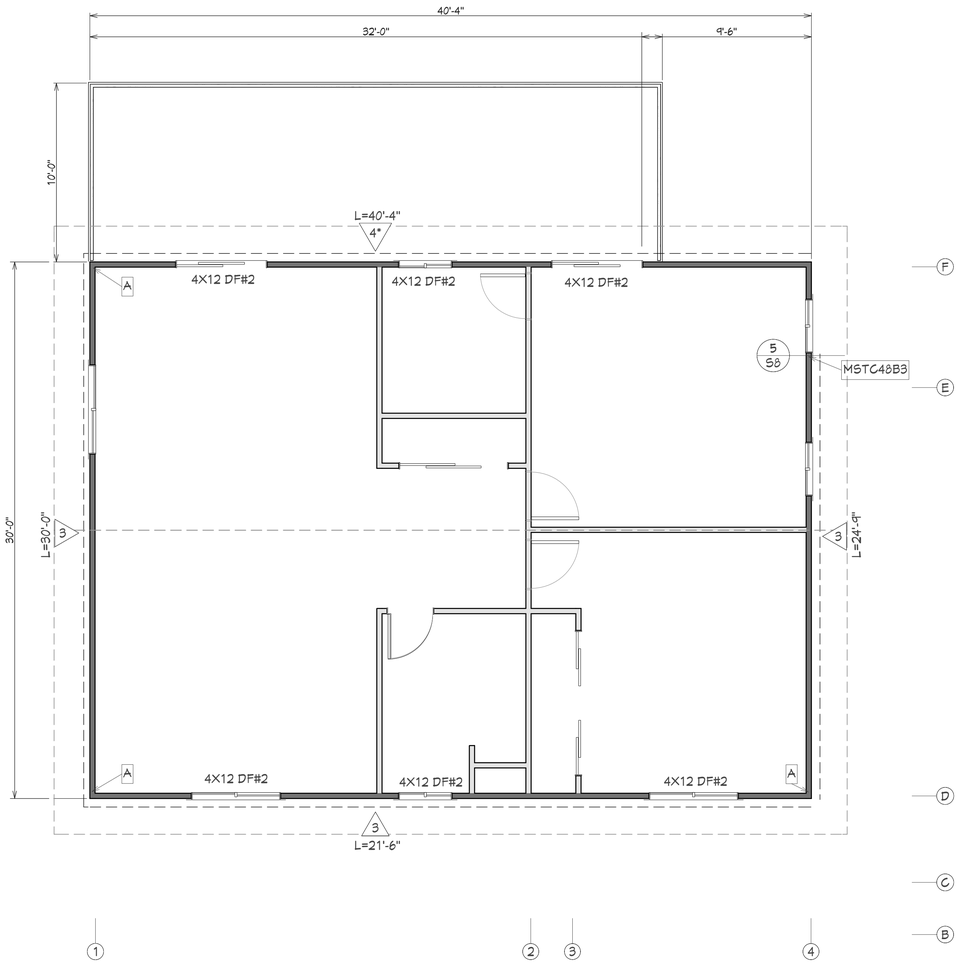

2nd FLOOR SHEAR WALL PLAN

SCALE: 1/4" = 1'

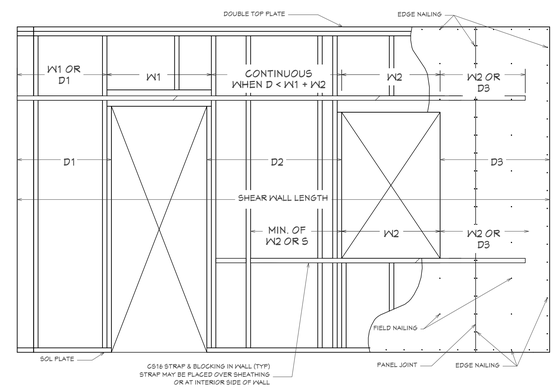

FORCE TRANSFER SHEAR WALL DETAIL

SCALE: NTS

LEGEND

- SHEAR WALL, SEE TABLE 4/S7
- FORCE TRANSFER SHEAR WALL WITH SHEAR PLY AND NAILING ABOVE AND BELOW OPENINGS. SEE DETAIL THIS SHEET.
- PERFORATED SHEAR WALL WITH SHEAR PLY AND NAILING ABOVE AND BELOW OPENINGS. SEE DETAIL THIS SHEET.
- HOLD DOWN, SEE TABLE 4/S7
- REVISION #, SEE REVISION TABLE

REGISTERED PROFESSIONAL ENGINEER
JARED DANIEL PECHAN
No. 69153
CIVIL
STATE OF CALIFORNIA

REVISION TABLE

LABEL	DATE	DESCRIPTION

PROJECT ADDRESS:
38 Clausen Rd
Watsonville, CA
APN: 119-221-002-000

PLANS PREPARED FOR:
Mr. & Mrs. Rodolfo Jimenez
38 Clausen Rd
Watsonville, CA

SHEAR WALL PLAN

JP Engineering
Jared Pechan, P.E. 69153
PO Box 51848
Pacific Grove, CA 93950
Cell: (831) 264-5217
jpeng@live.com

DATE: 12/21/2023

SCALE: AS SHOWN

JOB #: 0636

SHEET
S3
OF S8

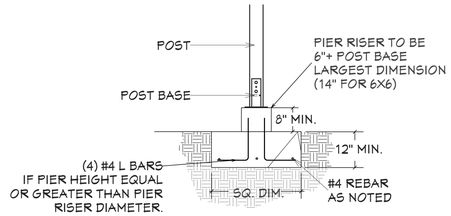

DECK PIER NOTES:

PIER #	POST	FTG	POST BASE	POST CAP
DECK PIER	6x6 DF#2	2'-0" SQ x 12"	PBS66	AC6

5/S4 DECK PIER DETAIL
SCALE: NTS

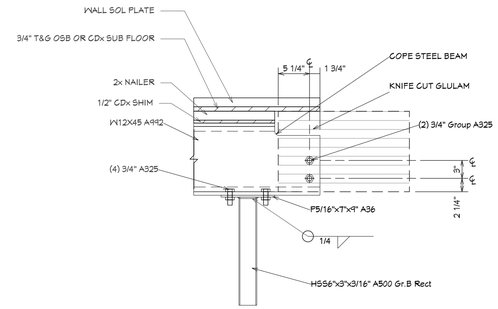

1/S4 CONNECTION DETAIL
SCALE: 1" = 1'

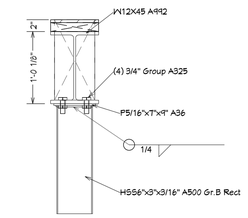

2/S4 CONNECTION DETAIL
SCALE: 1" = 1'

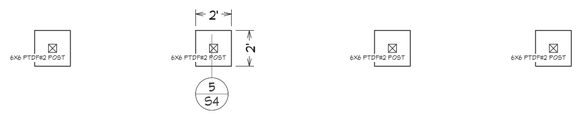

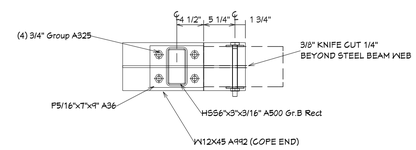

3/S4 CONNECTION DETAIL
SCALE: 1" = 1'

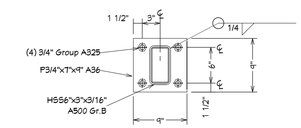

4/S4 CONNECTION DETAIL
SCALE: 1" = 1'

ANCHOR BOLT NOTES:
1. ANCHOR ROD A307 OR BETTER.
2. 3/4" A.B. W/ MIN. 12" EMBEDMENT UNLESS NOTED OTHERWISE. GALVANIZED.
3. MIN. 3" CONCRETE COVER BELOW AND AROUND BOLT/ROD.

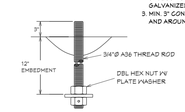

3/4" Ø ANCHOR ROD DETAIL
SCALE: NTS

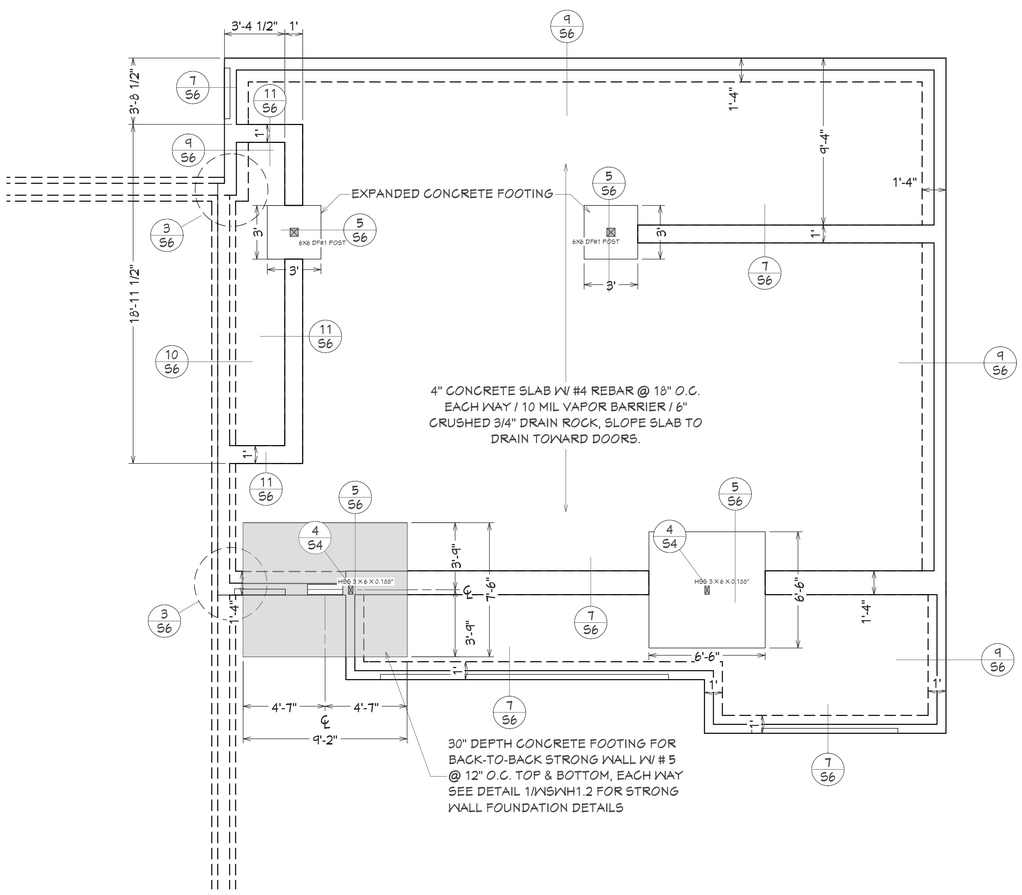

FOUNDATION PLAN
SCALE: 1/4" = 1'

Strong-Wall® High-Strength Wood Shearwalls

Back-to-Back Installations on Concrete Foundations

SIMPSON Strong-Tie

Strong-Wall® High-Strength Wood Shearwalls

The Strong-Wall® high-strength wood shearwall may be installed in a back-to-back orientation in residential, multi-family and light-commercial applications for cases where maximum allowable loads are required and a special moment frame might otherwise be specified. The allowable ASD shear loads for back-to-back installations may be taken as twice those listed for standard applications in the table on pp. 14–15. Double 2x8 top plates are required for standard applications and a minimum 7" x 11¼" header is required for single- or double-portal applications depending upon loading and span requirements. Back-to-back anchorage solutions for spread footings and reinforced grade beam foundations are provided in detail sheets WSWH1.2 and WSWH1.3, and may be downloaded in PDF, DWG or DXF format at **strongtie.com.**

Codes: ICC-ES ESR-2652, City of LA Building Code Supplement and State of Florida FL5113

For product data and naming scheme, see pp. 12–13.

Installation

- Portal-frame connection kit is required for portal frame applications (one WSWH-PK kit required for both panels; straps installed on outside panel faces only).
- Allowable out-of-plane loads listed on p. 16 for single-story walls on concrete foundations shall apply and may not be increased.
- See garage header rough opening height table on p. 17.
- All panels may be field trimmed to a minimum of 74½". Trim height from top of panel only, do not trim from sides or bottom. Drilling holes in the Strong-Wall high-strength wood shearwalls is not permitted except as shown on p. 36.
- Anchor bolt nuts should be finger tight plus ½ turn.
- Maximum shim thickness between the shearwall and top plates or header is ⅝". For additional thicknesses, see detail 9/WSWH2 on p. 35.
- Top connection installs with a combination of ¼" x 6" SDS Heavy-Duty Connector screws and SWS16150 Strong-Wall screws. See details 7/WSWH2 and 3/WSWH4 on pp. 33 and 38 for standard and portal applications, respectively.

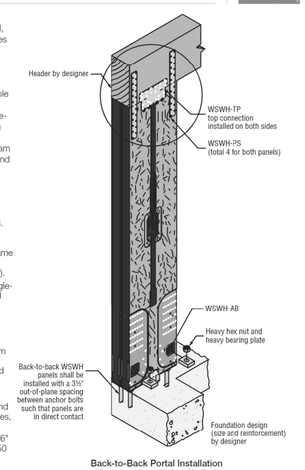

Back-to-Back Portal Installation (Standard Installation Similar)

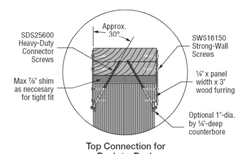

Top Connection for Back-to-Back Standard Installation

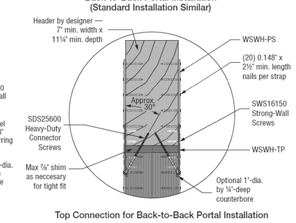

Top Connection for Back-to-Back Portal Installation

© 2021 Simpson Strong-Tie Company Inc. C-L-SW21

LABEL	DATE	DESCRIPTION

REVISION TABLE

PROJECT ADDRESS:
38 Clausen Rd
Watsonville, CA
APN: 119-221-002-000

PLANS PREPARED FOR:
Mr. & Mrs. Rodolfo Jimenez
38 Clausen Rd
Watsonville, CA

FOUNDATION PLAN

J P Engineering
Jared Pechan, P.E. 69153
PO Box 51848
Pacific Grove, CA 93950
Cell: (831) 264-3217
jpengr@live.com

REGISTERED PROFESSIONAL ENGINEER
JARED PECHAN
No. 69153
CIVIL
STATE OF CALIFORNIA

DATE: 12/21/2023

SCALE: AS SHOWN

JOB #: 0636

SHEET
S4
OF S8

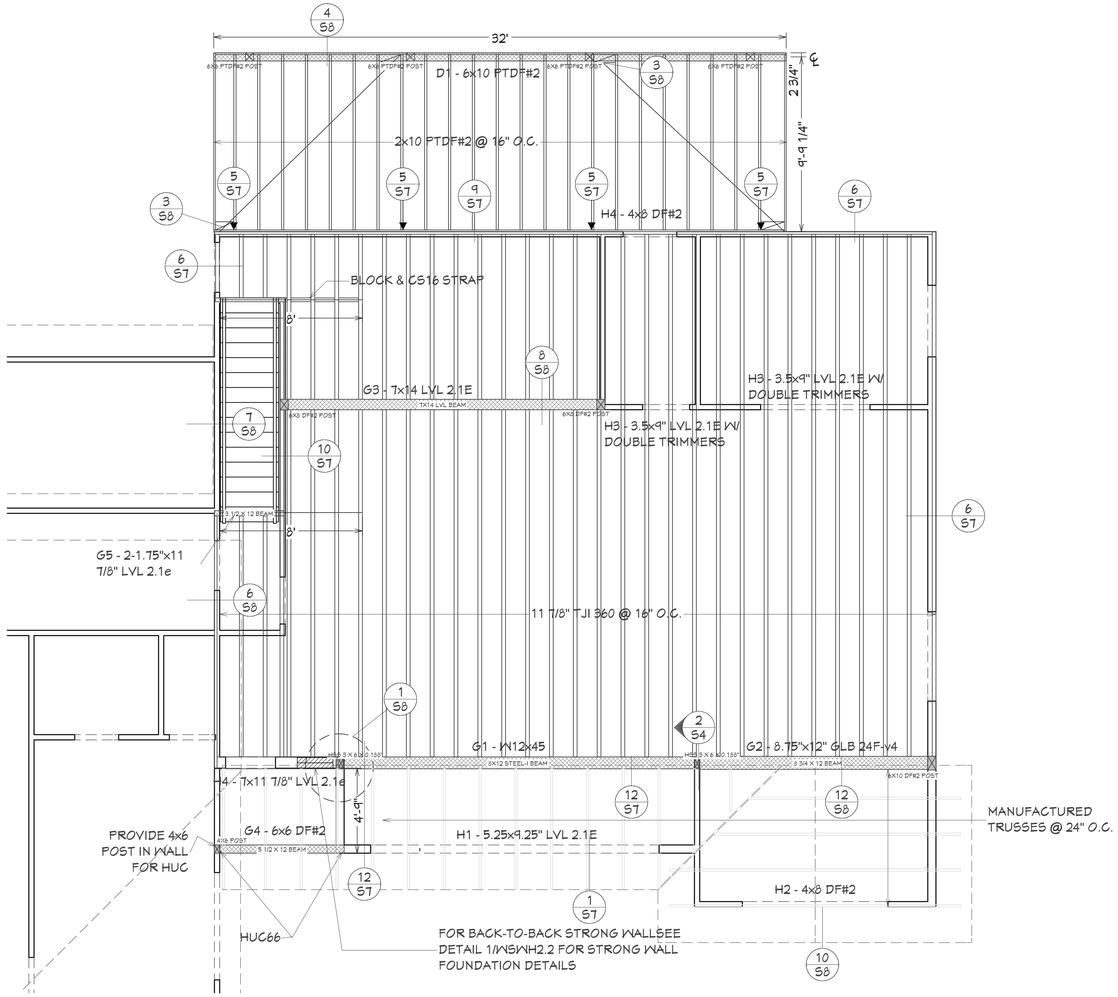

FLOOR & ROOF FRAMING PLAN

SCALE: 1/4" = 1'

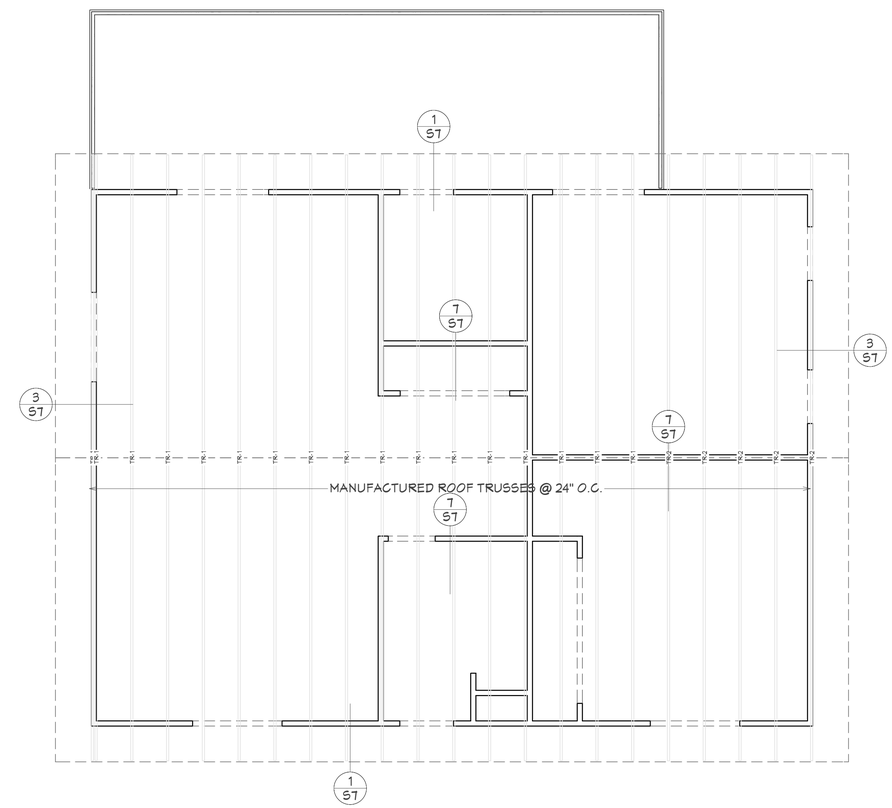

ROOF FRAMING PLAN

SCALE: 1/4" = 1'

REVISION TABLE

LABEL	DATE	DESCRIPTION

PROJECT ADDRESS:
38 Clausen Rd
Watsonville, CA
APN: 119-221-002-000

PLANS PREPARED FOR:
Mr. & Mrs. Rodolfo Jimenez
38 Clausen Rd
Watsonville, CA

FRAMING PLAN

JP Engineering
Jared Pechan, P.E. 69153
PO Box 51848
Pacific Grove, CA 93950
Cell: (831) 264-3217
jpengr@live.com

REGISTERED PROFESSIONAL ENGINEER
JARED DANIEL PECHAN
No. 69153
CIVIL
STATE OF CALIFORNIA

DATE: 12/21/2023

SCALE: AS SHOWN

JOB #: 0636

SHEET
S5
OF S8

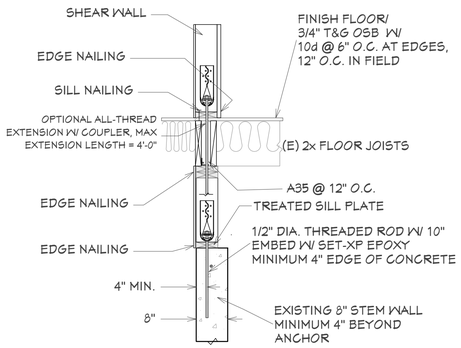

Anchor Name: SET-3G® w/ 5/8"Ø F1554 Gr. 36
Code Report: ICC-ES ESR-4057

RETROFIT ANCHOR
SCALE: NTS

1. FOUNDATION DETAIL

2. BLANK

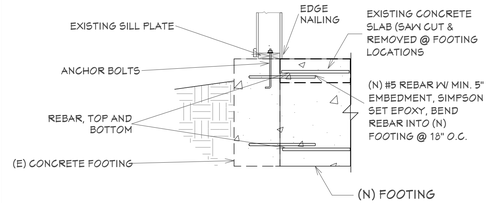

3. FOOTING

SCALE: NTS

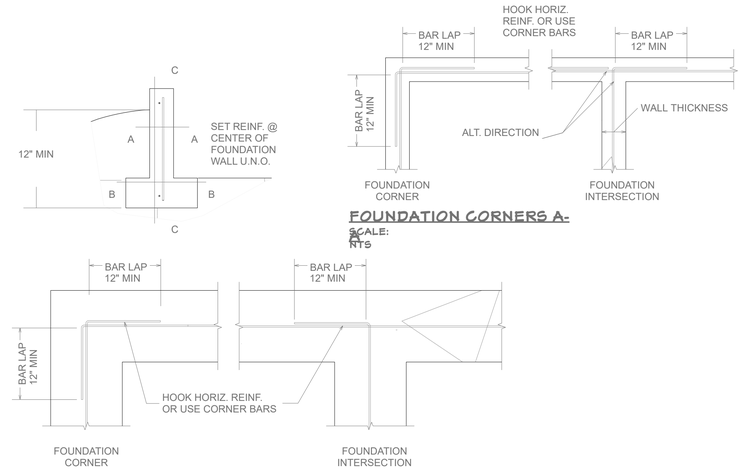

FOUNDATION CORNERS A-A
SCALE:
NTS

FOUNDATION CORNERS B-B
SCALE:
NTS

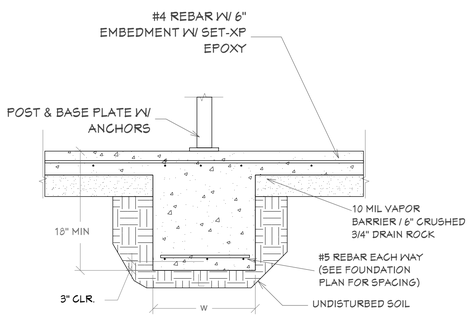

5. FOUNDATION DETAIL

SCALE: NTS

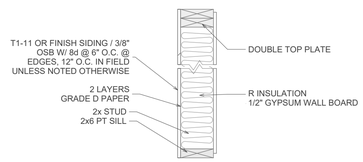

TYPICAL EXTERIOR WALL DETAIL
SCALE: NTS

A MINIMUM OF ONE LAYER OF No. 15 ASPHALT FELT, FREE FROM HOLES AND BREAKS, COMPLYING WITH ASTM D 226 FOR TYPE 1 FELT SHALL BE APPLIED OVER STUDS OF ALL EXTERIOR WALLS. TWO LAYERS OF GRADE D OR 60 MINUTE GRADE D PAPER SHALL BE APPLIED OVER ALL WOOD BASE SHEATHING. WATER RESISTIVE BARRIERS SHALL BE INSTALLED AS REQUIRED IN SECTION R703.2 AND WHERE APPLIED OVER WOOD-BASED SHEATHING, SHALL INCLUDE A WATER-RESISTIVE VAPOR-PERMEABLE BARRIER WITH A PERFORMANCE AT LEAST EQUIVALENT TO TWO LAYERS OF GRADE D PAPER.

6. TYPICAL EXTERIOR WALL

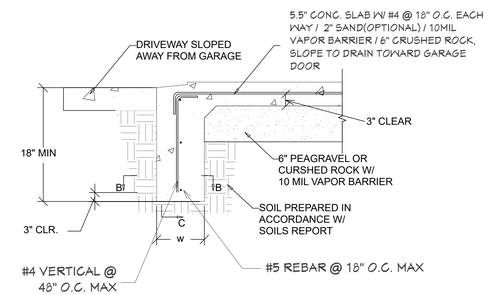

7. FOOTING

SCALE: NTS

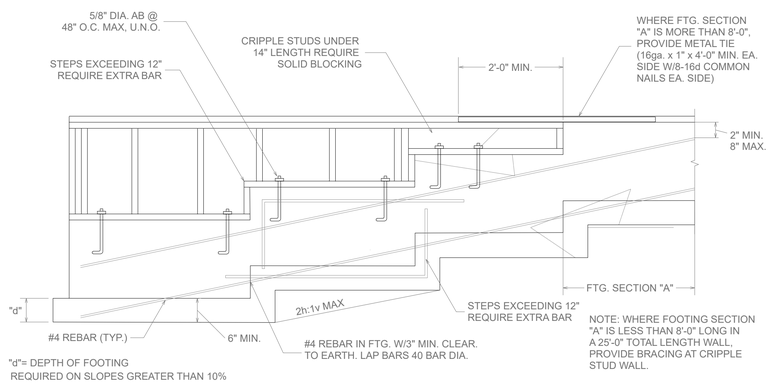

TYPICAL STEP FOUNDATION C-C
SCALE:
NTS

8. FOOTINGS

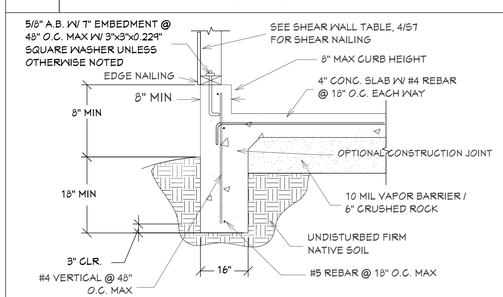

NOTES:

1. THE TOP SURFACE OF FTGS SHALL BE LEVEL. THE BOTTOM SURFACE OF FTGS. IS PERMITTED TO HAVE A SLOPE NOT EXCEEDING 1:10.
2. REINFORCEMENT SHALL BE PROVIDED AS FOLLOWS:
(1) VERTICAL REINFORCEMENT OF AT LEAST (1) #4 REBAR SHALL BE PROVIDED AT EACH CORNER, AT EACH SIDE OF EACH OPENING AND AT THE ENDS OF WALLS AND AT 48" O.C.
(2) HORIZONTAL REINFORCEMENT OF AT LEAST (1) #4 REBAR SHALL BE PROVIDED CONTINUOUSLY AT:
1. THE TOP OF STEMWALLS
2. THE BOTTOM OF FOOTINGS
3. A MAXIMUM OF 18" O.C.

9. FOUNDATION DETAIL

SCALE: NTS

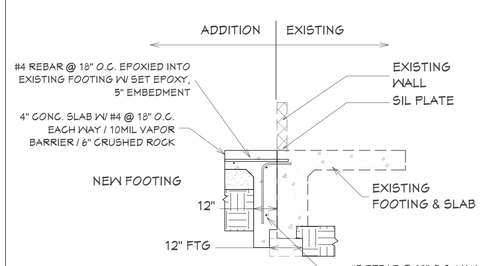

10. FOUNDATION DETAIL

SCALE: NTS

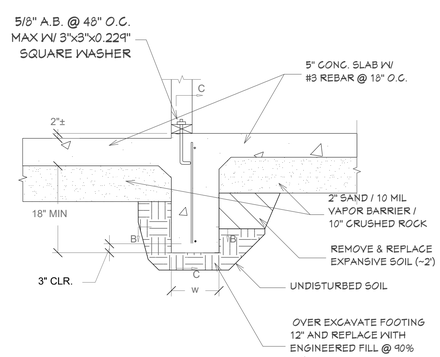

11. FRAMING DETAIL

MINIMUM REBAR DEVELOPEMENT LENGTHS AND BENDS

Type of standard hook	Bar size	Minimum inside bend diameter, in.	Straight extension[1] ℓ_{ext}, in.	Type of standard hook
90-degree hook	No. 3 through No. 8	$6d_b$	$12d_b$	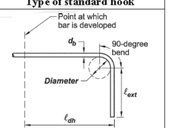
	No. 9 through No. 11	$8d_b$		
	No. 14 and No. 18	$10d_b$		
180-degree hook	No. 3 through No. 8	$6d_b$	Greater of $4d_b$ and 2.5 in.	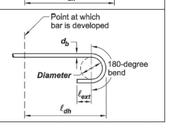
	No. 9 through No. 11	$8d_b$		
	No. 14 and No. 18	$10d_b$		

[1]A standard hook for deformed bars in tension includes the specific inside bend diameter and straight extension length. It shall be permitted to use a longer straight extension at the end of a hook. A longer extension shall not be considered to increase the anchorage capacity of the hook.

12. REBAR DETAILS

REGISTERED PROFESSIONAL ENGINEER
JARED DAVID PECHAN
No. 69153
CIVIL
STATE OF CALIFORNIA

REVISION TABLE		
LABEL	DATE	DESCRIPTION

PROJECT ADDRESS:
36 Clausen Rd
Watsonville, CA
APN: 119-221-002-000

PLANS PREPARED FOR:
Mr. & Mrs. Rodolfo Jimenez
36 Clausen Rd
Watsonville, CA

STRUCTURAL DETAILS

JP Engineering
Jared Pechan, P.E. 69153
PO Box 51848
Pacific Grove, CA 93950
Cell: (831) 264-3217
jpeng@live.com

DATE: 12/21/2023

SCALE: AS SHOWN

JOB #: 0636

SHEET
S6
OF S8

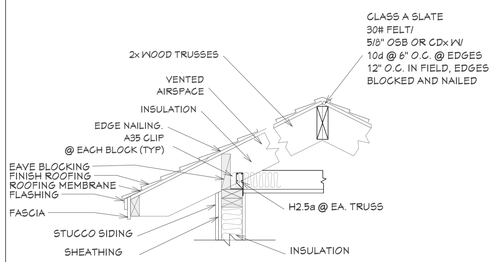

*SEE ARCHITECTUAL PLANS FOR EAVE DETAILS

1. FRAMING DETAIL

SCALE: NTS

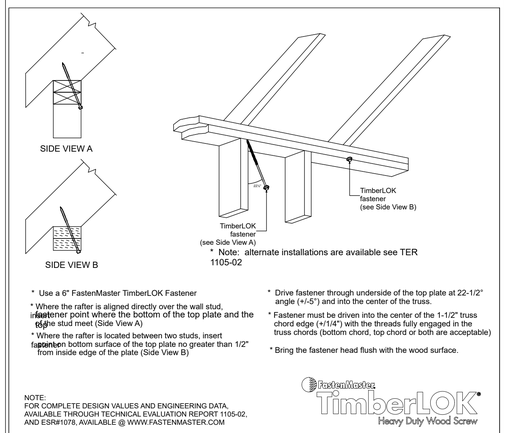

D1 - Rafter Tail To Top Plate Connection

SCALE: NTS

2. ALTERNATE RAFTER CONNECTION

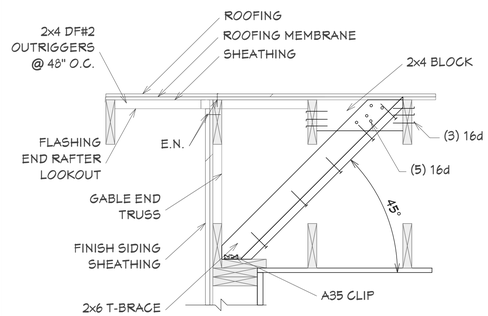

3. FRAMING DETAIL

SCALE: NTS

SHEAR WALL SCHEDULE

X	SHEAR CAPACITY	SHEAR WALL	SILL NAILING / AB SPACING**	NOTES
6	260 PLF	3/8" OSB W/ 8d @ 6" O.C. @ EDGE, 12" O.C. IN FIELD	16d @ 6" O.C./ 5/8" A.B. @ 4'-0" O.C.	
4	350 PLF	3/8" OSB W/ 8d @ 4" O.C. @ EDGE, 12" O.C. IN FIELD	16d @ 6" O.C. STAGGERED/ 5/8" A.B. @ 3'-5" SPACING	
3	490 PLF	3/8" OSB W/ 8d @ 3" O.C. @ EDGE, 12" O.C. IN FIELD	20d @ 4" O.C. STAGGERED/ 5/8" A.B. @ 2'-1" O.C.*	
2	640 PLF	3/8" OSB W/ 8d @ 2" O.C. @ EDGE, 12" O.C. IN FIELD	20d @ 3" O.C. STAGGERED/ 5/8" A.B. @ 1'-7" O.C.	
4-4	720 PLF	3/8" OSB W/ 8d @ 4" O.C. @ EDGE, 12" O.C. IN FIELD, BOTH SIDES	20d @ 3" O.C. STAGGERED/ 5/8" A.B. @ 1'-5" SPACING	3" NOMINAL MEMBERS FOR EDGE NAILING, 3" SILL PLATE
2-2	1280 PLF	3/8" OSB W/ 8d @ 2" O.C. @ EDGE, 12" O.C. IN FIELD, BOTH SIDES	20d @ 1.5" O.C. STAGGERED/ 5/8" A.B. @ 0'-9" SPACING	3" NOMINAL MEMBERS FOR EDGE NAILING, 3" SILL PLATE
2a	870 PLF	5/8" OSB W/ 10d @ 2" O.C. @ EDGE, 12" O.C. IN FIELD, BOTH SIDES	20d @ 2.5" O.C. STAGGERED/ 5/8" A.B. @ 1'-2" SPACING	3" NOMINAL MEMBERS FOR EDGE NAILING, 3" SILL PLATE
2-2b	1770 PLF	19/32" OSB W/ 10d @ 2" O.C. @ EDGE, 12" O.C. IN FIELD, BOTH SIDES	1/4" SDS SCREW @ 1.6" O.C. STAGGERED/ 5/8" A.B. @ 0'-7" SPACING	3" NOMINAL MEMBERS FOR EDGE NAILING, 3" SILL PLATE

HOLD DOWN ANCHOR SCHEDULE

	HOLD DOWN	ANCHOR	RETROFIT ANCHOR	CAPACITY	POST
A	HDU2	SSTB14	SEE DETAIL 1/S6	2625	(2) 2x4
B	HDU4	SSTB16		4190	(2) 2x4
C	HDU5	SSTB24		5175	(2)2X4
D	HDU8	SSTB28		7870	(3)2x4
E	HDU11	SB1x30		11175	4x6

ALL SPECIFIED NAILS TO BE COMMON UNLESS OTHERWISE NOTED

PENNY WEIGHT	NAIL DIAMETER
8d	0.113"
8d	0.131"
10d	0.148"
16d	0.162"
20d	0.192"

*WHEN PLACING HDU HOLD DOWNS IN TWO FOUR APPLICATION, INCREASE SIZE OF HOLD DOWN BY (1) SIZE (I.E. USE HDU4 INSTEAD OF HDU2)

**SPECIAL INSPECTION REQUIRED FOR 4" EDGE NAILING AND CLOSER

4. SHEAR WALL SCHEDULE

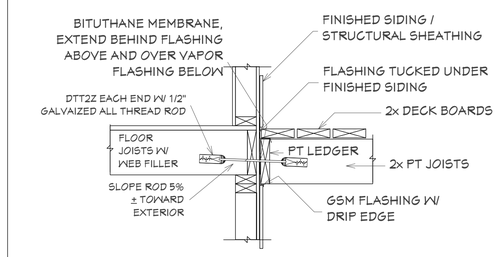

5. FRAMING DETAIL

SCALE: NTS

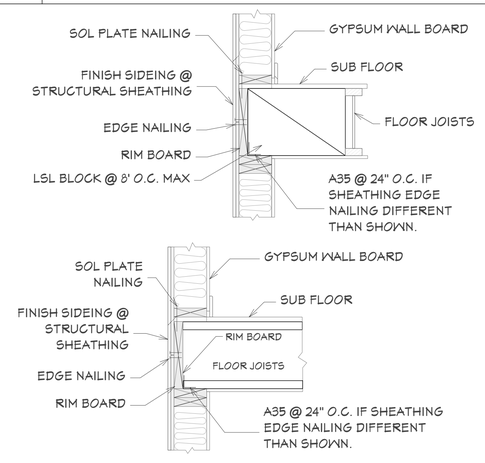

6. FRAMING DETAIL

SCALE: NTS

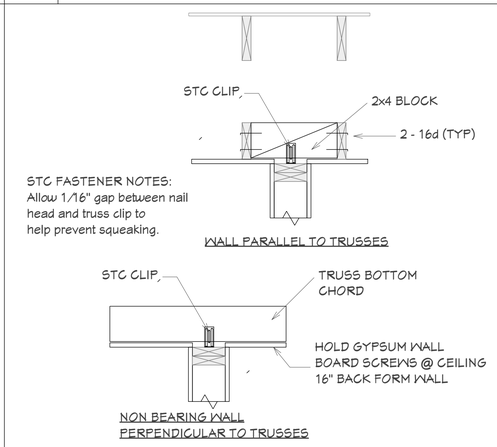

7. FRAMING DETAIL

SCALE: NTS

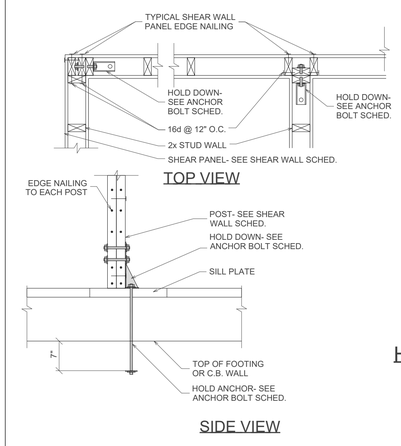

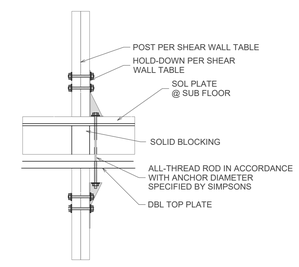

HOLD DOWN @ SECOND FLOOR

8. HOLD DOWNS

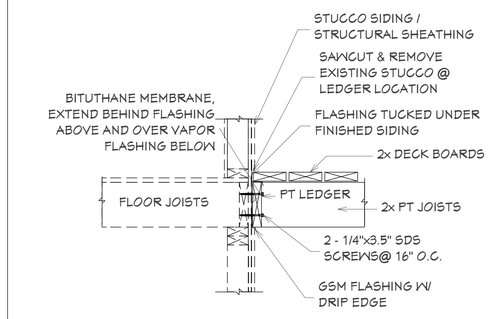

9. FRAMING DETAIL

SCALE: NTS

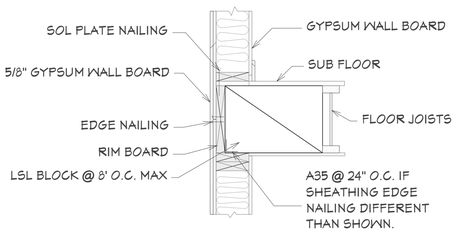

10. FRAMING DETAIL

SCALE: NTS

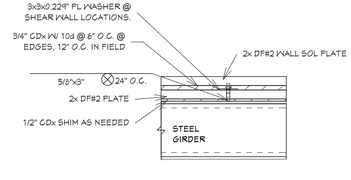

11. NAILER DETAIL

SCALE: NTS

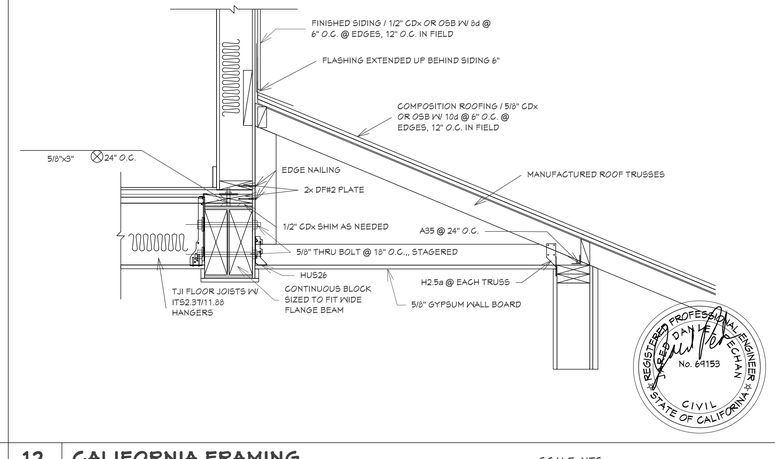

12. CALIFORNIA FRAMING

SCALE: NTS

LABEL	DATE	REVISION TABLE DESCRIPTION

PROJECT ADDRESS:
36 Clausen Rd
Watsonville, CA
APN: 119-221-002-000

PLANS PREPARED FOR:
Mr. & Mrs. Rodolfo Jimenez
36 Clausen Rd
Watsonville, CA

STRUCTURAL DETAILS

J P Engineering
Jared Pochna, P.E. 69153
PO Box 51848
Pacific Grove, CA 93950
Cell: (831) 264-5217
jpeng@live.com

DATE: 12/21/2023

SCALE: AS SHOWN

JOB #: 0636

SHEET
S7
OF S8

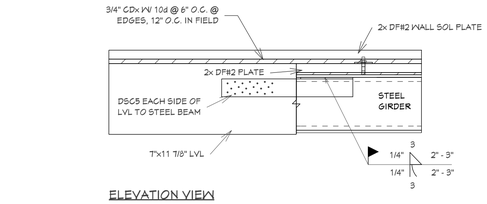

ELEVATION VIEW

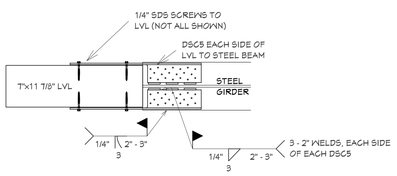

PLAN VIEW

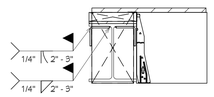

SECTION VIEW

1. STRUCTURAL DETAILS

SCALE: 1"=1'

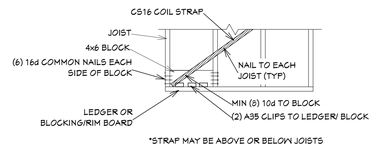

3. FRAMING DETAIL

SCALE: NTS

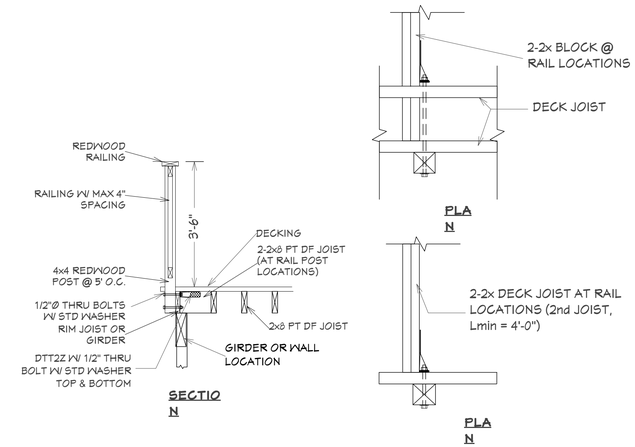

SECTIO
N

PLA
N

PLA
N

4. DECK RAILING

SCALE: NTS

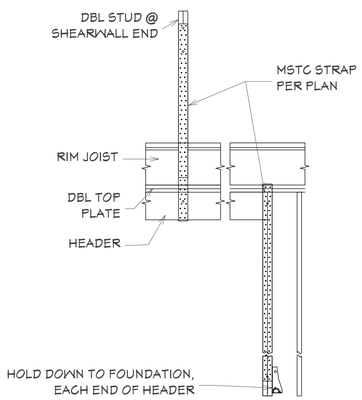

5. FRAMING DETAIL

SCALE: NTS

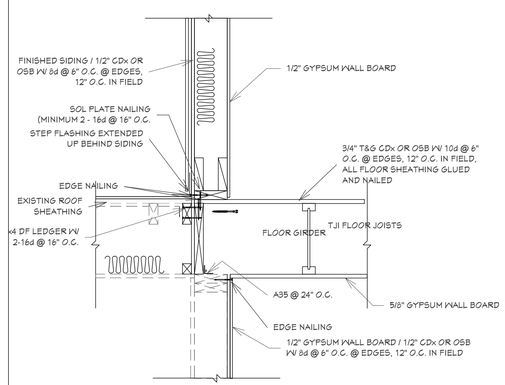

6. FRAMING DETAIL

SCALE: NTS

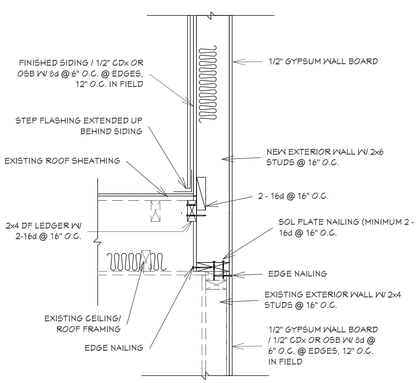

7. FRAMING DETAIL

SCALE: NTS

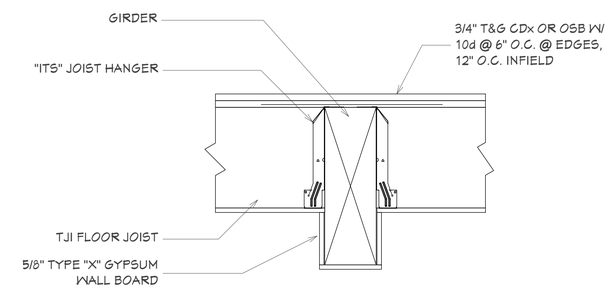

8. FLUSH FLOOR GIRDER

9. BLANK

SCALE: NTS

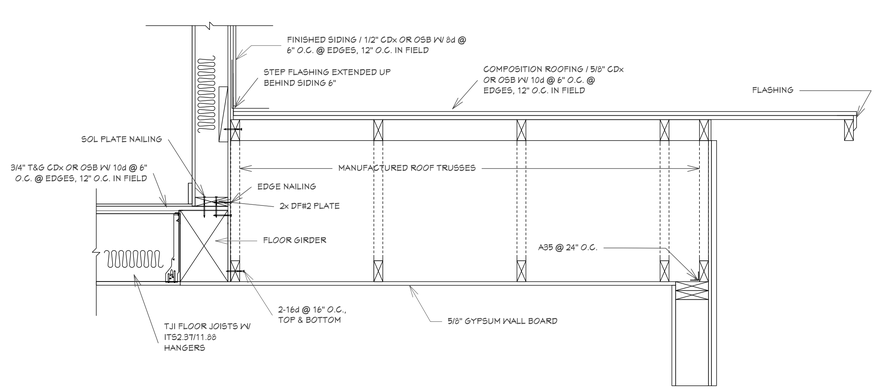

10. FRAMING DETAIL

SCALE: NTS

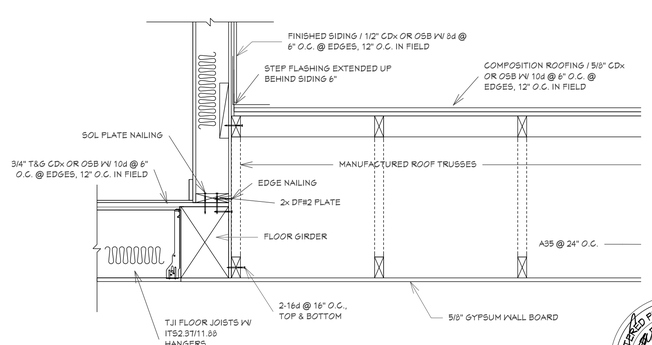

12. CALIFORNIA FRAMING

SCALE: NTS

REGISTERED PROFESSIONAL ENGINEER
JAYCEE PECHAN
No. 69153
CIVIL
STATE OF CALIFORNIA

REVISION TABLE

LABEL	DATE	DESCRIPTION

PROJECT ADDRESS:
38 Clausen Rd
Watsonville, CA
APN: 119-221-002-000

PLANS PREPARED FOR:
Mr. & Mrs. Rodolfo Jimenez
38 Clausen Rd
Watsonville, CA

STRUCTURAL DETAILS

J P Engineering
Jayce Pechan, P.E. 69153
PO Box 51848
Pacific Grove, CA 93950
Cell: (831) 264-5217
jpeng@live.com

DATE: 12/21/2023

SCALE: AS SHOWN

JOB #: 0636

SHEET
S8
OF S8

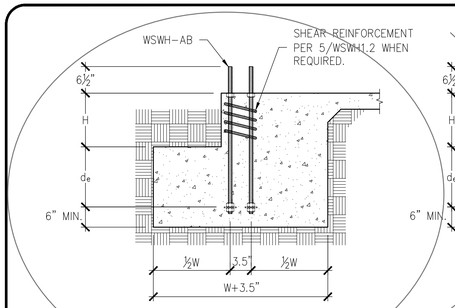

SLAB ON GRADE FOUNDATION

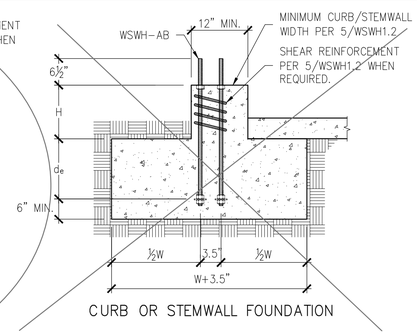

CURB OR STEMWALL FOUNDATION

NOTES :
1. SEE 2/WSWH1.2 FOR DIMENSIONS AND ADDITIONAL NOTES.
2. SEE 5/WSWH1.2 FOR SHEAR REINFORCEMENT WHEN REQUIRED.
3. MAXIMUM H = $l_e - d_e$. SEE 3/WSWH1.2 AND 4/WSWH1.2 FOR l_e.

DESIGNER IS PERMITTED TO MODIFY DETAILS FOR SPECIFIC CONDITIONS.

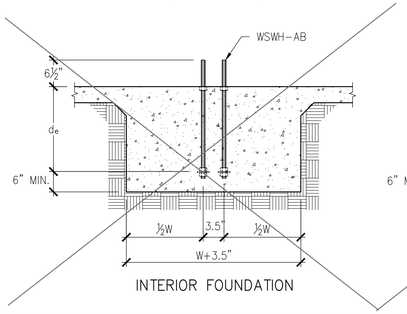

INTERIOR FOUNDATION

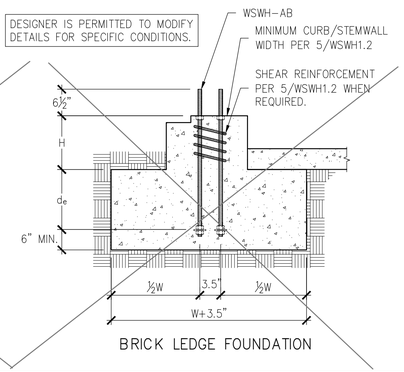

BRICK LEDGE FOUNDATION

STRONG-WALL® WSWH BACK-TO-BACK ANCHORAGE – TYPICAL SECTIONS 1

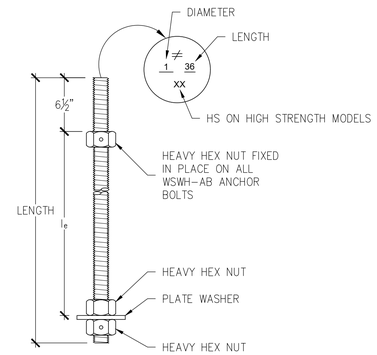

WSWH PANEL MODEL	MODEL NO.	DIAMETER	LENGTH	l_e
WSWH12, WSWH18 AND WSWH24	WSWH-AB1x24	1"	24"	15½"
	WSWH-AB1x24HS	1"	24"	15½"
	WSWH-AB1x30	1"	30"	21½"
	WSWH-AB1x30HS	1"	30"	21½"
	WSWH-AB1x36	1"	36"	27½"
	WSWH-AB1x36HS	1"	36"	27½"
	WSWH-AB1x42	1"	42"	33½"
	WSWH-AB1x42HS	1"	42"	33½"
	WSWH-AB1x48	1"	48"	39½"
	WSWH-AB1x48HS	1"	48"	39½"

WSWH BACK-TO-BACK ANCHOR BOLTS 3

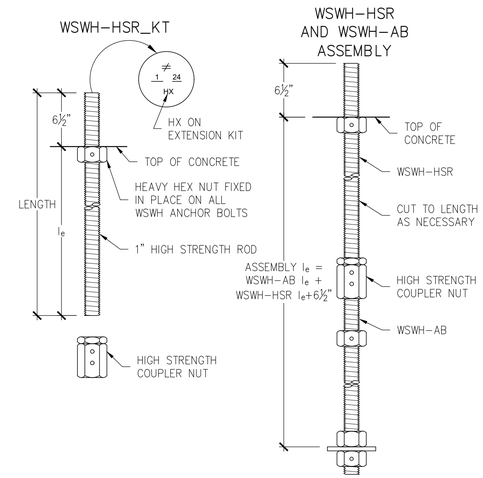

WSWH PANEL MODEL	MODEL NO.	DIAMETER	LENGTH	l_e
WSWH12, WSWH18 AND WSWH24	WSWH-HSR1x24KT	1"	24"	17½"
	WSWH-HSR1x36KT	1"	36"	29½"

WSWH BACK-TO-BACK ANCHOR BOLT EXTENSION 4

TBD

WSWH BACK-TO-BACK ANCHOR BOLT TEMPLATES 6

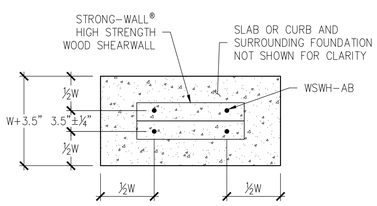

FOUNDATION PLAN VIEW

NOTES :
1. ANCHORAGE DESIGNS CONFORM TO ACI 318-11 APPENDIX D, ACI 318-14 CHAPTER 17 AND ACI 318-19 CHAPTER 17 WITH NO SUPPLEMENTARY REINFORCEMENT FOR CRACKED OR UNCRACKED CONCRETE AS NOTED.
2. ANCHOR STRENGTH INDICATES REQUIRED GRADE OF WSWH-AB ANCHOR BOLT. STANDARD (ASTM F1554 GRADE 36) OR HIGH STRENGTH (HS) (ASTM A193 GRADE B7).
3. SEISMIC INDICATES SEISMIC DESIGN CATEGORY C-F. DETACHED 1 AND 2 FAMILY DWELLINGS IN SDC C MAY USE WIND ANCHORAGE SOLUTIONS. SEISMIC ANCHORAGE DESIGNS CONFORM TO ACI 318-11 SECTION D.3.3.4.3, ACI 318-14 SECTION 17.2.3.4.3, AND ACI 318-19 SECTION 17.10.5.3.
4. WIND INCLUDES SEISMIC DESIGN CATEGORY A AND B AND DETACHED 1 AND 2 FAMILY DWELLINGS IN SDC C.
5. SOLUTIONS ASSUME THAT BACK-TO-BACK PANEL ARE IN CONTACT WITH EACH OTHER.
6. FOUNDATION DIMENSIONS ARE FOR ANCHORAGE ONLY. FOUNDATION DESIGN (SIZE AND REINFORCEMENT) BY OTHERS. THE DESIGNER MAY SPECIFY ALTERNATE EMBEDMENT, FOOTING SIZE OR ANCHOR BOLT.
7. REFER TO 1/WSWH1.2 FOR d_e.

WSWH BACK-TO-BACK ANCHORAGE SOLUTIONS FOR 2500 PSI CONCRETE

DESIGN CRITERIA	CONCRETE CONDITION	ANCHOR STRENGTH	WSWH-AB1 ANCHOR BOLT ASD ALLOWABLE UPLIFT (lbs)	W (in)	d_e (in)
SEISMIC	CRACKED	STANDARD	34,200	50	17
		HIGH STRENGTH	73,600	90	30
	UNCRACKED	STANDARD	34,200	44	15
		HIGH STRENGTH	73,600	71	24
WIND	CRACKED	STANDARD	8,800	18	6
			23,200	36	12
			34,200	46	16
		HIGH STRENGTH	44,200	54	18
			52,400	60	20
			61,100	66	22
			73,600	75	25
	UNCRACKED	STANDARD	11,100	18	6
			22,200	30	10
			34,200	40	14
		HIGH STRENGTH	45,800	48	16
			55,300	56	18
			65,500	60	20
			73,600	65	22

WSWH BACK-TO-BACK ANCHORAGE SOLUTIONS FOR 3000 PSI CONCRETE

DESIGN CRITERIA	CONCRETE CONDITION	ANCHOR STRENGTH	WSWH-AB1 ANCHOR BOLT ASD ALLOWABLE UPLIFT (lbs)	W (in)	d_e (in)
SEISMIC	CRACKED	STANDARD	34,200	48	16
		HIGH STRENGTH	73,600	76	26
	UNCRACKED	STANDARD	34,200	42	14
		HIGH STRENGTH	73,600	67	23
WIND	CRACKED	STANDARD	9700	18	6
			19,500	30	10
			34,200	44	15
		HIGH STRENGTH	48,500	54	18
			57,400	60	20
			66,900	66	22
			73,600	70	24
	UNCRACKED	STANDARD	12,100	18	6
			24,400	30	10
			34,200	38	13
		HIGH STRENGTH	45,200	45	15
			60,600	54	18
			71,800	60	20
			73,600	61	21

WSWH BACK-TO-BACK ANCHORAGE SOLUTIONS FOR 4500 PSI CONCRETE

DESIGN CRITERIA	CONCRETE CONDITION	ANCHOR STRENGTH	WSWH-AB1 ANCHOR BOLT ASD ALLOWABLE UPLIFT (lbs)	W (in)	d_e (in)
SEISMIC	CRACKED	STANDARD	34,200	42	14
		HIGH STRENGTH	73,600	68	23
	UNCRACKED	STANDARD	34,200	37	13
		HIGH STRENGTH	73,600	59	20
WIND	CRACKED	STANDARD	11,900	18	6
			23,900	30	10
			34,200	39	13
		HIGH STRENGTH	39,700	42	14
			49,100	48	16
			64,700	57	19
			73,600	62	21
	UNCRACKED	STANDARD	14,800	18	6
			25,800	27	9
			34,200	34	12
		HIGH STRENGTH	44,100	39	13
			55,400	45	15
			67,700	51	17
			73,600	54	18

Project:
38 Clausen Rd
Watsonville, CA
APN: 119-221-002-000

12/4/2023

STRONG-WALL® WSWH BACK-TO-BACK TENSION ANCHORAGE SCHEDULE 2,500, 3,000 AND 4,500 PSI 2

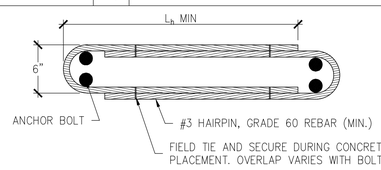

HAIRPIN SHEAR REINFORCEMENT

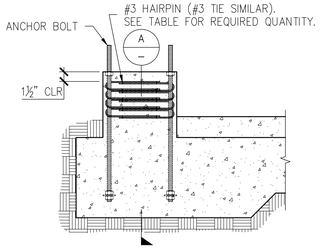

HAIRPIN INSTALLATION
(GARAGE CURB SHOWN. OTHER FOOTING TYPES SIMILAR.)

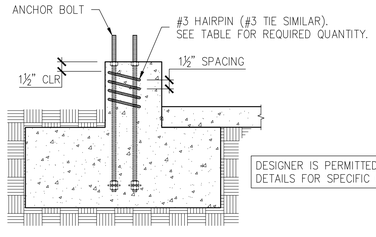

SECTION A

DESIGNER IS PERMITTED TO MODIFY DETAILS FOR SPECIFIC CONDITIONS.

STRONG-WALL® BACK-TO-BACK SHEAR ANCHORAGE

MODEL	SEISMIC[3] L_h (in.)	SEISMIC[3] SHEAR REINFORCEMENT	SEISMIC[3] MIN. CURB/STEMWALL WIDTH (in.)	WIND[4] SHEAR REINFORCEMENT	WIND[4] MIN. CURB/STEMWALL WIDTH (in.)
(2) WSWH12	10¼	(1) #3 HAIRPIN	12	(1) #3 HAIRPIN	12
(2) WSWH18	15	(3) #3 HAIRPINS[6,7]	12	(2) #3 HAIRPINS	12
(2) WSWH24	19	(4) #3 HAIRPINS[6,7]	12	(3) #3 HAIRPINS[6]	12

NOTES :
1. SHEAR ANCHORAGE DESIGNS CONFORM TO ACI 318-11, ACI 318-14 AND ACI 318-19 AND ASSUME MINIMUM 2,500 PSI CONCRETE.
2. SHEAR REINFORCEMENT IS NOT REQUIRED FOR INTERIOR FOUNDATION APPLICATIONS (PANEL INSTALLED AWAY FROM EDGE OF CONCRETE), OR BRACED WALL PANEL APPLICATIONS.
3. SEISMIC INDICATES SEISMIC DESIGN CATEGORY C THROUGH F. DETACHED 1 AND 2 FAMILY DWELLINGS IN SDC C MAY USE WIND ANCHORAGE SOLUTIONS. SEISMIC SHEAR REINFORCEMENT DESIGNS CONFORM TO ACI 318-19, SECTION 17.10.6.3 AND ACI 318-14, SECTION 17.2.3.5.3.
4. WIND INCLUDES SEISMIC DESIGN CATEGORY A AND B.
5. HIGH STRENGTH ANCHORAGE IS ASSUMED IN TABLE.
6. ADDITIONAL TIES MAY BE REQUIRED AT GARAGE CURB OR STEMWALL INSTALLATIONS BELOW ANCHOR REINFORCEMENT PER DESIGNER.
7. USE (2) #3 HAIRPINS FOR WSWH18 AND WSWH24 WHEN STANDARD STRENGTH ANCHORAGE IS USED.
8. #4 GRADE 40 SHEAR REINFORCEMENT MAY BE SUBSTITUTED FOR WSWH SHEAR ANCHORAGE SOLUTIONS.
9. CONCRETE EDGE DISTANCE FOR ANCHORS MUST COMPLY WITH ACI 318-19 SECTION 17.9.2, ACI 318-14 SECTION 17.7.2 AND ACI 318-11 SECTION D.8.2.
10. THE DESIGNER MAY SPECIFY ALTERNATE SHEAR ANCHORAGE.

STRONG-WALL® WSWH BACK-TO-BACK SHEAR ANCHORAGE SCHEDULE AND DETAILS 5

NO.	DATE	REVISIONS
0	10-12-2020	FIRST RELEASE - 2018 IBC
1	03-16-2021	2021 IBC REVISIONS
2	04-29-2022	ADDED WSWH-AB MODELS

SIMPSON Strong-Tie, Co. Inc.
• 5956 W. Las Positas Blvd.
Pleasanton, CA 94588
• Tel: (800) 999-5099
• Website: www.strongtie.com

SIMPSON Strong-Tie — THERE IS NO EQUAL

STRONG-WALL® WSWH
BACK-TO-BACK ANCHORAGE DETAILS
ENGINEERED DESIGNS

SIMPSON Strong-Tie — THERE IS NO EQUAL

NAME
DATE 04-29-2022
SCALE N.T.S.
CHECKED
SHEET WSWH1.2
OF SHEETS
JOB NO.

STRONG-WALL® HIGH STRENGTH WOOD SHEARWALL MODELS

MODEL NO.	W (in.)	H (in.)	ANCHOR BOLTS		TOTAL WALL WEIGHT (lb.)
			QUANTITY	DIA. (in.)	
WSWH12x7	12	84	2	1	105
WSWH18x7	18	84	2	1	155
WSWH12x8	12	96	2	1	120
WSWH18x8	18	96	2	1	175
WSWH24x8	24	96	2	1	225
WSWH12x9	12	108	2	1	130
WSWH18x9	18	108	2	1	195
WSWH24x9	24	108	2	1	250
WSWH12x10	12	120	2	1	145
WSWH18x10	18	120	2	1	210
WSWH24x10	24	120	2	1	275
WSWH12x12	12	144	2	1	165
WSWH18x12	18	144	2	1	245
WSWH24x12	24	144	2	1	325
WSWH18x14	18	168	2	1	285
WSWH24x14	24	168	2	1	370
WSWH24x16	24	192	2	1	420
WSWH18x20	18	240	2	1	390
WSWH24x20	24	240	2	1	520

NOTES :
1. FOR HEIGHTS NOT LISTED, ORDER THE NEXT TALLEST PANEL AND TRIM TO FIT. MINIMUM TRIMMED HEIGHT FOR ALL PANELS IS 74½".
2. ALL PANELS COME WITH PRE-ATTACHED HOLDOWNS, TWO HEAVY HEX NUTS, TWO HEAVY BEARING PLATES, ONE WSWH-TP TOP CONNECTION PLATE WITH REQUIRED FASTENERS AND INSTALLATION INSTRUCTIONS.
3. ALL PANELS ARE 3½" THICK.

STRONG-WALL® WSWH MODELS 1

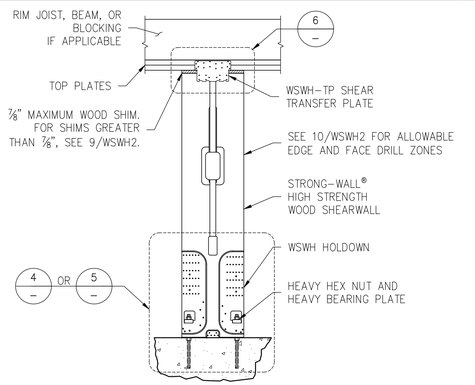

DESIGNER IS PERMITTED TO MODIFY DETAILS FOR SPECIFIC CONDITIONS.

ENSURE CONCRETE IS LEVEL AND SMOOTH BENEATH PANEL. GRIND OR FILL AS NECESSARY.

SINGLE STORY WSWH ON CONCRETE 2

STANDARD INSTALLATION BASE CONNECTION 4

DESIGNER IS PERMITTED TO MODIFY DETAILS FOR SPECIFIC CONDITIONS.

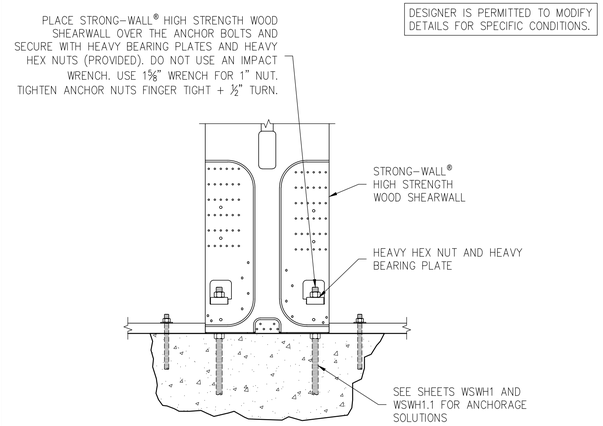

WOOD FLOOR SYSTEM BASE CONNECTION 5

TOP CONNECTION 6

MODEL NO.	WSWH-TP CONNECTION	
	FASTENER QUANTITY	
	SWS16150	SDS25600
WSWH-TP12	14	2
WSWH-TP18	26	4
WSWH-TP24	46	8

DESIGNER IS PERMITTED TO MODIFY DETAILS FOR SPECIFIC CONDITIONS.

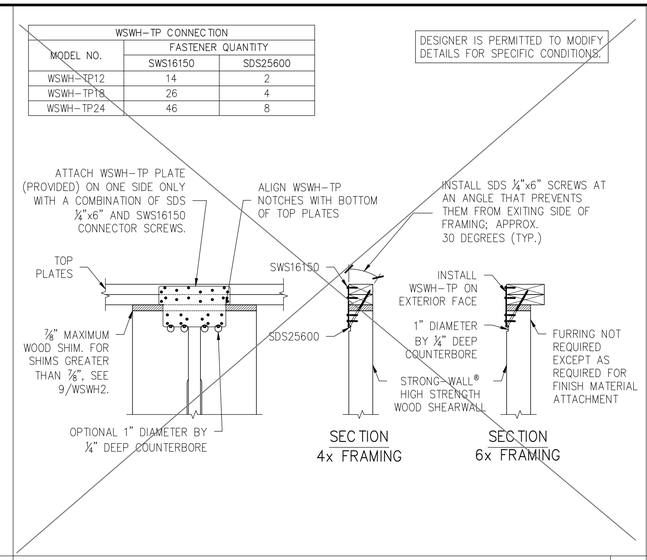

BACK-TO-BACK TOP CONNECTION 7

TOP OF WALL HEIGHT ADJUSTMENTS 9

DESIGNER IS PERMITTED TO MODIFY DETAILS FOR SPECIFIC CONDITIONS.

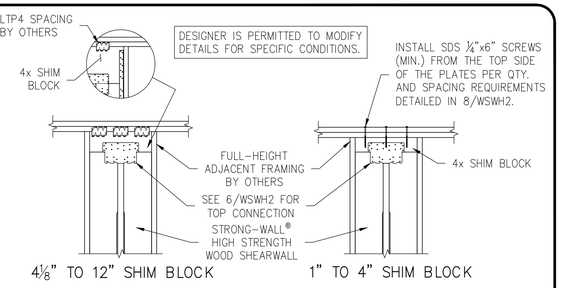

DESIGNER SHALL DESIGN AND DETAIL FOR:
1. SHEAR TRANSFER
2. OUT-OF-PLANE LOADING EFFECT
3. INCREASED OVERTURNING AND DRIFT DUE TO ADDITIONAL HEIGHT

FOR 8" TO 12" BLOCK DEPTHS:
ATTACH SIMPSON STRONG-TIE® CS16 STRAPS AT EDGE OF WSWH PANEL (EACH SIDE) USING 10dx1½" NAILS

SHIM BLOCK HEIGHTS GREATER THAN 8" AND UP TO 10":
- 8 NAILS INTO BLOCK
- 8 NAILS INTO WSWH PANEL

SHIM BLOCK HEIGHTS GREATER THAN 10" AND UP TO 12":
- 10 NAILS INTO BLOCK
- 10 NAILS INTO WSWH PANEL

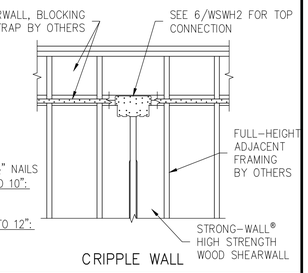

TRIM ZONE AND ALLOWABLE HOLES 10

ALTERNATE WSWH GARAGE FRONT OPTIONS 3

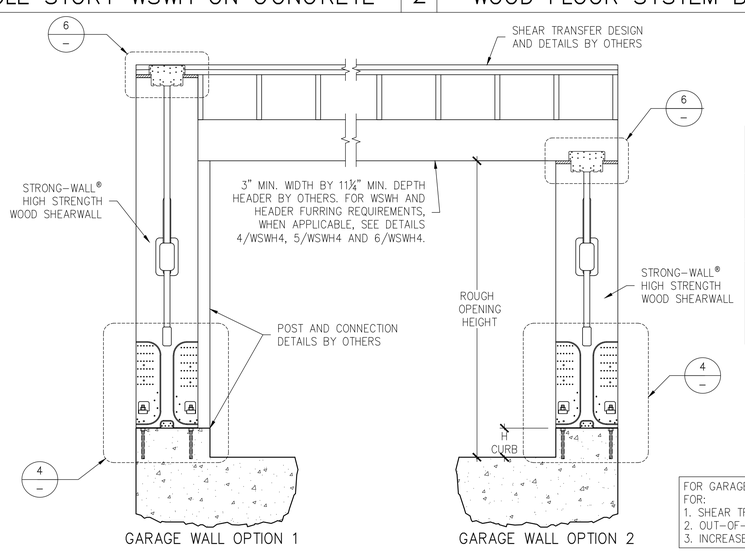

DESIGNER IS PERMITTED TO MODIFY DETAILS FOR SPECIFIC CONDITIONS.

WHEN WSWH-PS STRAPS OMITTED, ALLOWABLE SHEAR VALUES FOR STANDARD PANEL APPLY.

GARAGE HEADER ROUGH OPENING HEIGHT

MODEL NO.	TRIMMED PANEL HEIGHT	H CURB	ROUGH OPENING HEIGHT
WSWH12x7 WSWH18x7 WSWH24x7	78"	5½"	6'-11½"
		6"	7'-0"
WSWH12x8 WSWH18x8 WSWH24x8	85½"	0"	7'-1½"
	93¼"	5½"	8'-2¾"
		6"	8'-3¼"

NOTES :
1. IF REQUIRED ROUGH OPENING HEIGHT EXCEEDS TABLE VALUE, SPECIFY NEXT TALLER PANEL AND TRIM AS NECESSARY. THE STRONG-WALL® HIGH STRENGTH WOOD SHEARWALL MAY BE TRIMMED TO A MINIMUM HEIGHT OF 74½".
2. FURRING DOWN GARAGE HEADER MAY BE REQUIRED FOR CORRECT ROUGH OPENING HEIGHT.

FOR GARAGE WALL OPTION 2, DESIGNER SHALL DESIGN AND DETAIL FOR:
1. SHEAR TRANSFER
2. OUT-OF-PLANE LOADING EFFECT
3. INCREASED OVERTURNING AND DRIFT DUE TO ADDITIONAL HEIGHT

RAKE WALL 8

QTY. OF SDS¼"x6" SCREWS REQ'D.	
WSWH12	4
WSWH18	8
WSWH24	16

EDGE DISTANCE FOR SCREWS		
SLOPE	A (in.)	B (in.)
0:12–4:12	2	3
5:12–8:12	1½	4½
9:12–12:12	1½	5½

NOTES :
1. MAINTAIN END DISTANCES TO PREVENT SCREWS FROM PENETRATING THROUGH THE OUTER EDGES.
2. INSTALL SCREWS PERPENDICULAR TO THE TOP PLATE.
3. EDGE DISTANCES ASSUME DOUBLE TOP PLATE.

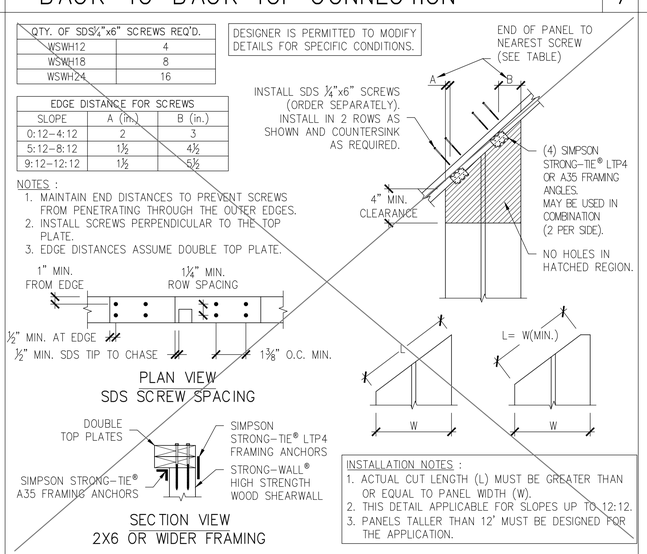

DESIGNER IS PERMITTED TO MODIFY DETAILS FOR SPECIFIC CONDITIONS.

INSTALLATION NOTES :
1. ACTUAL CUT LENGTH (L) MUST BE GREATER THAN OR EQUAL TO PANEL WIDTH (W).
2. THIS DETAIL APPLICABLE FOR SLOPES UP TO 12:12.
3. PANELS TALLER THAN 12' MUST BE DESIGNED FOR THE APPLICATION.

NOTES 11

1. STRONG-WALL® HIGH STRENGTH WOOD SHEARWALL IS MANUFACTURED AND TRADEMARKED BY "SIMPSON STRONG-TIE COMPANY INC." HOME OFFICE: 5956 W. LAS POSITAS BLVD., PLEASANTON, CA 94588 TEL: (800) 999-5099, FAX: (925) 847-1597. "SIMPSON STRONG-TIE COMPANY INC." IS AN ISO 9001-2008 REGISTERED COMPANY.
2. USE OF THIS PRODUCT IS SUBJECT TO THE APPROVAL OF THE LOCAL BUILDING DEPARTMENT.
3. THIS PRODUCT IS PART OF THE OVERALL LATERAL FORCE RESISTING SYSTEM OF THE STRUCTURE. DESIGN OF THE BUILDING'S LATERAL FORCE RESISTING SYSTEM, INCLUDING THE LOAD PATH TO TRANSFER LATERAL FORCES FROM THE STRUCTURE TO THE GROUND, IS THE RESPONSIBILITY OF THE DESIGNER.
4. ENGINEER OF RECORD IS PERMITTED TO MODIFY DETAILS FOR SPECIFIC CONDITIONS.
5. THE CONTRACTOR SHALL VERIFY ALL DIMENSIONS, CONDITIONS, ELEVATIONS, ETC. PRIOR TO INSTALLATION OF ANY COMPONENTS FOR THE STRONG-WALL SB SYSTEM. IF ANY DISCREPANCIES ARE FOUND, THEY SHALL BE BROUGHT TO THE ATTENTION OF THE DESIGNER FOR CLARIFICATION PRIOR TO CONSTRUCTION.
6. INSTALLATION OF PRODUCT SHALL BE DONE IN CONFORMANCE TO THESE DRAWINGS. THE PERFORMANCE OF MODIFIED PRODUCTS OR ALTERED INSTALLATION PROCEDURES ARE THE SOLE RESPONSIBILITY OF THE DESIGNER.
7. SIMPSON STRONG-TIE COMPANY INC. RESERVES THE RIGHT TO CHANGE SPECIFICATIONS, DESIGNS, AND MODELS WITHOUT NOTICE OR LIABILITY FOR SUCH CHANGES.
8. ALL HARDWARE CALLED OUT IS SIMPSON STRONG-TIE.
9. SEE ICC-ES ESR-2652 OR CITY OF LOS ANGELES RR25730 AS APPLICABLE FOR ADDITIONAL INFORMATION.

REGISTERED PROFESSIONAL ENGINEER KENNETH CHAN No. 69153 CIVIL STATE OF CALIFORNIA

12/4/2023

Project:
38 Clausen Rd
Watsonville, CA
APN: 119-221-002-000

NO.	DATE	REVISIONS
0	11-20-2020	FIRST RELEASE - 2018 IBC
1	03-16-2021	2021 IBC REVISIONS

SIMPSON Strong-Tie, Co. Inc.
• 5956 W. Las Positas Blvd. Pleasanton, CA 94588
• Tel: (800) 999-5099
• Website: www.strongtie.com

SIMPSON Strong-Tie — THERE IS NO EQUAL

STRONG-WALL® WSWH
FRAMING DETAILS
ENGINEERED DESIGNS

SIMPSON Strong-Tie — THERE IS NO EQUAL

NAME
DATE 03-16-2021
SCALE N.T.S.
CHECKED
SHEET WSWH2
OF SHEETS
JOB NO.

GENERAL INFORMATION

01	Project Name	Clausen Rd Addition			
02	Run Title	Title 24 Analysis			
03	Project Location	38 Clausen Rd			
04	City	Watsonville	05	Standards Version	2022
06	Zip code	95076	07	Software Version	EnergyPro 9.2
08	Climate Zone	3	09	Front Orientation (deg/ Cardinal)	315
10	Building Type	Single family	11	Number of Dwelling Units	1
12	Project Scope	Addition and/or Alteration	13	Number of Bedrooms	6
14	Addition Cond. Floor Area (ft^2)	1210	15	Number of Stories	3
16	Existing Cond. Floor Area (ft^2)	2120	17	Fenestration Average U-factor	0.3
18	Total Cond. Floor Area (ft^2)	3330	19	Glazing Percentage (%)	8.61%
20	ADU Bedroom Count	n/a	21	ADU Conditioned Floor Area	n/a
22	Fuel Type	Natural gas	23	No Dwelling Unit:	No

COMPLIANCE RESULTS

01	Building Complies with Computer Performance
02	This building incorporates features that require field testing and/or verification by a certified HERS rater under the supervision of a CEC-approved HERS provider.
03	This building incorporates one or more Special Features shown below

ENERGY USE SUMMARY

Energy Use	Standard Design Source Energy (EDR1) (kBtu/ft^2 -yr)	Standard Design TDV Energy (EDR2) (kTDV/ft^2 -yr)	Proposed Design Source Energy (EDR1) (kBtu/ft^2 -yr)	Proposed Design TDV Energy (EDR2) (kTDV/ft^2 -yr)	Compliance Margin (EDR1)	Compliance Margin (EDR2)
Space Heating	0	57.63	0	57.42	0	0.21
Space Cooling	0	7.26	0	7.63	0	-0.37
IAQ Ventilation	0	2.5	0	1.96	0	0.54
Water Heating	0	22.37	0	22.37	0	0
Self Utilization/Flexibility Credit						
Efficiency Compliance Total	**0**	**89.76**	**0**	**89.38**	**0**	**0.38**
Photovoltaics		0		0		
Battery				0		
Flexibility						
Indoor Lighting	0	7.03	0	7.03		
Appl. & Cooking	0	15.81	0	15.82		
Plug Loads	0	26.24	0	26.24		
Outdoor Lighting	0	1.73	0	1.73		
TOTAL COMPLIANCE	**0**	**140.57**	**0**	**140.2**		

ENERGY USE INTENSITY

	Standard Design (kBtu/ft^2 - yr)	Proposed Design (kBtu/ft^2 - yr)	Compliance Margin (kBtu/ft^2 - yr)	Margin Percentage
Gross EUI[1]	27.72	27.68	0.04	0.14
Net EUI[2]	27.72	27.68	0.04	0.14

Notes
1. Gross EUI is Energy Use Total (not including PV) / Total Building Area.
2. Net EUI is Energy Use Total (including PV) / Total Building Area.

REQUIRED SPECIAL FEATURES

The following are features that must be installed as condition for meeting the modeled energy performance for this computer analysis.

- Indoor air quality, balanced fan
- IAQ Ventilation System: as low as 0.5 W/CFM
- IAQ Ventilation System Heat Recovery: minimum 75 SRE and 75 ASRE
- IAQ Ventilation System: supply outside air inlet, filter, and HVERV cores accessible per RACM Reference Manual
- Insulation below roof deck

HERS FEATURE SUMMARY

The following is a summary of the features that must be field-verified by a certified HERS Rater as a condition for meeting the modeled energy performance for this computer analysis. Additional detail is provided in the building tables below. Registered CF2Rs and CF3Rs are required to be completed in the HERS Registry

- Quality insulation installation (QII)
- Indoor air quality ventilation
- Minimum Airflow
- Fan Efficacy Watts/CFM
- Verified heat pump rated heating capacity
- Duct leakage testing
- Duct Sealing required if a duct system component, plenum, or air handling unit is altered

BUILDING - FEATURES INFORMATION

01	02	03	04	05	06	07
Project Name	Conditioned Floor Area (ft^2)	Number of Dwelling Units	Number of Bedrooms	Number of Zones	Number of Ventilation Cooling Systems	Number of Water Heating Systems
Clausen Rd Addition	3330	1	6	2	0	1

ZONE INFORMATION

01	02	03	04	05	06	07
Zone Name	Zone Type	HVAC System Name	Zone Floor Area (ft^2)	Avg. Ceiling Height	Water Heating System 1	Status
1st Floor Zone Existing	Conditioned	Res HVAC1	2120	8	DHW Sys 1	Existing Unchanged
2nd Floor Zone Addition	Conditioned	Res HVAC2	1210	8	DHW Sys 1	New

OPAQUE SURFACES

01	02	03	04	05	06	07	08	09	10	11
Name	Zone	Construction	Azimuth	Orientation	Gross Area (ft^2)	Window and Door Area (ft2)	Tilt (deg)	Wall Exceptions	Status	Verified Existing Condition
Front Wall	1st Floor Zone Existing	Default Wall Prior to 197	315	Front	495	83	90	none	Existing	No
Left Wall	1st Floor Zone Existing	Default Wall Prior to 197	45	Left	443	15	90	none	Existing	No
Back Wall	1st Floor Zone Existing	Default Wall Prior to 197	135	Back	492	33	90	none	Existing	No
Right Wall	1st Floor Zone Existing	Default Wall Prior to 197	225	Right	305	36	90	none	Existing	No
Front Wall 2	2nd Floor Zone Addition	R-15 Wall	315	Front	323	43	90	none	New	n/a
Left Wall 2	2nd Floor Zone Addition	R-15 Wall	45	Left	270	20	90	none	New	n/a
Back Wall 2	2nd Floor Zone Addition	R-15 Wall	135	Back	323	66.6	90	none	New	n/a
Right Wall 2	2nd Floor Zone Addition	R-15 Wall	225	Right	240	28	90	none	New	n/a
Interior Surface	1st Floor Zone Existing>>__Garage__	Default Wall Prior to 1971	n/a	n/a	64	0	n/a		Existing	No
Roof	1st Floor Zone Existing	Default Roof Prior to 197	n/a	n/a	2120	n/a	n/a		Existing	No

OPAQUE SURFACES

01	02	03	04	05	06	07	08	09	10	11
Name	Zone	Construction	Azimuth	Orientation	Gross Area (ft^2)	Window and Door Area (ft2)	Tilt (deg)	Wall Exceptions	Status	Verified Existing Condition
Roof 2	2nd Floor Zone Addition	R-30 Roof Attic/HP	n/a	n/a	1210	n/a	n/a		New	n/a
Garage Roof	__Garage__	R-0 Roof Attic	n/a	n/a	265	n/a	n/a		New	n/a
Raised Floor	1st Floor Zone Existing	Default Floor Crawlspace	n/a	n/a	2120	n/a	n/a		Existing	No
Interior Surface 2	2nd Floor Zone Addition	R-0 Floor No Crawlspace	n/a	n/a	65	n/a	n/a		New	n/a
Interior Surface 3	2nd Floor Zone Addition	R-19 Floor No Crawlspace	n/a	n/a	1142	n/a	n/a		New	n/a
Garage Wall Front	__Garage__	Garage Ext Wall	315	Front	360	168	90	none	New	n/a
GarageWall Left	__Garage__	Garage Ext Wall	45	Left	105	0	90	none	New	n/a
Garage Wall Back	__Garage__	Garage Ext Wall	135	Back	363	0	90	none	New	n/a
Garage Wall Right	__Garage__	Garage Ext Wall	225	Right	340	0	90	none	New	n/a

ATTIC

01	02	03	04	05	06	07	08	09	10
Name	Construction	Type	Roof Rise (x in 12)	Roof Reflectance	Roof Emittance	Radiant Barrier	Cool Roof	Status	Verified Existing Condition
Attic __Garage__	Attic Garage Roof Cons	Ventilated	5	0.1	0.85	No	No	New	n/a
Attic 1st Floor Zone Existing	Attic Roof1st Floor Zone Existing	Ventilated	5	0.1	0.85	No	No	Existing	No
Attic 2nd Floor Zone Addition	Attic Roof2nd Floor Zone Addition	Ventilated	5	0.1	0.85	No	No	New	n/a

FENESTRATION / GLAZING

01	02	03	04	05	06	07	08	09	10	11	12	13	14	15	16
Name	Type	Surface	Orientation	Azimuth	Width (ft)	Height (ft)	Mult.	Area (ft^2)	U-factor	U-factor Source	SHGC	SHGC Source	Exterior Shading	Status	Verified Existing Condition
Front Windows	Window	Front Wall	Front	315			1	63	0.55	Table 110.6-A	0.67	Table 110.6-B	Bug Screen	Existing	No
Left Windows	Window	Left Wall	Left	45			1	15	0.55	Table 110.6-A	0.67	Table 110.6-B	Bug Screen	Existing	No
Back Windows	Window	Back Wall	Back	135			1	15	0.55	Table 110.6-A	0.67	Table 110.6-B	Bug Screen	Existing	No
Right Windows	Window	Right Wall	Right	225			1	36	0.55	Table 110.6-A	0.67	Table 110.6-B	Bug Screen	Existing	No
Front Windows 2	Window	Front Wall 2	Front	315			1	43	0.3	NFRC	0.35	NFRC	Bug Screen	New	NA
Left Windows 2	Window	Left Wall 2	Left	45			1	20	0.3	NFRC	0.35	NFRC	Bug Screen	New	NA
Back Windows/Door	Window	Back Wall 2	Back	135			1	66.6	0.3	NFRC	0.35	NFRC	Bug Screen	New	NA
Right Windows 2	Window	Right Wall 2	Right	225			1	28	0.3	NFRC	0.35	NFRC	Bug Screen	New	NA

OPAQUE DOORS

01	02	03	04	05	06
Name	Side of Building	Area (ft^2)	U-factor	Status	Verified Existing Condition
Door	Front Wall	20	0.5	Existing	No
Door 2	Back Wall	18	0.5	Existing	No
Garage Car Door Front	Garage Wall Front	168	1	New	n/a

SLAB FLOORS

01	02	03	04	05	06	07	08	09	10
Name	Zone	Area (ft^2)	Perimeter (ft)	Edge Insul. R-value and Depth	Edge Insul. R-value and Depth	Carpeted Fraction	Heated	Status	Verified Existing Condition
Slab-on-Grade	2nd Floor Zone Addition	68	46	none	0	80%	No	New	n/a
Garage Slab	__Garage__	1407	156	none	0	0%	No	New	n/a

OPAQUE SURFACE CONSTRUCTIONS

01	02	03	04	05	06	07	08
Construction Name	Surface Type	Construction Type	Framing	Total Cavity R-value	Interior / Exterior Continuous R-value	U-factor	Assembly Layers
Garage Ext Wall	Exterior Walls	Wood Framed Wall	2x4 @ 16 in. O. C.	R-0	None / None	0.361	Inside Finish: Gypsum Board Cavity / Frame: no insul. / 2x4 Exterior Finish: 3 Coat Stucco
Default Wall Prior to 197	Exterior Walls	Wood Framed Wall	2x4 @ 16 in. O. C.	R-0	None / None	0.361	Inside Finish: Gypsum Board Cavity / Frame: no insul. / 2x4 Exterior Finish: 3 Coat Stucco
R-15 Wall	Exterior Walls	Wood Framed Wall	2x4 @ 16 in. O. C.	R-15	None / None	0.095	Inside Finish: Gypsum Board Cavity / Frame: R-15 / 2x4 Exterior Finish: 3 Coat Stucco
Default Wall Prior to 1971	Interior Walls	Wood Framed Wall	2x4 @ 16 in. O. C.	R-0	None / None	0.277	Inside Finish: Gypsum Board Cavity / Frame: no insul. / 2x4 Other Side Finish: Gypsum Board
Attic Garage Roof Cons	Attic Roofs	Wood Framed Ceiling	2x4 @ 24 in. O. C.	R-0	None / 0	0.644	Roofing: Light Roof (Asphalt Shingle) Roof Deck: Wood Siding/sheathing/decking Cavity / Frame: no insul. / 2x4

OPAQUE SURFACE CONSTRUCTIONS

01	02	03	04	05	06	07	08
Construction Name	Surface Type	Construction Type	Framing	Total Cavity R-value	Interior / Exterior Continuous R-value	U-factor	Assembly Layers
Attic Roof1st Floor Zone Existing	Attic Roofs	Wood Framed Ceiling	2x4 @ 24 in. O. C.	R-0	None / 0	0.644	Roofing: Light Roof (Asphalt Shingle) Roof Deck: Wood Siding/sheathing/decking Cavity / Frame: no insul. / 2x4
Attic Roof2nd Floor Zone Addition	Attic Roofs	Wood Framed Ceiling	2x4 @ 24 in. O. C.	R-13	None / 0	0.078	Roofing: Light Roof (Asphalt Shingle) Roof Deck: Wood Siding/sheathing/decking Cavity / Frame: R-13.0 / 2x4 Around Roof Joists: R-0.0 insul.
Default Floor Crawlspace	Floors Over Crawlspace	Wood Framed Floor	2x12 @ 16 in. O. C.	R-0	None / None	0.216	Floor Surface: Carpeted Floor Deck: Wood Siding/sheathing/decking Cavity / Frame: no insul. / 2x12
R-0 Roof Attic	Ceilings (below attic)	Wood Framed Ceiling	2x4 @ 24 in. O. C.	R-0	None / None	0.481	Cavity / Frame: no insul. / 2x4 Inside Finish: Gypsum Board
Default Roof Prior to 197	Ceilings (below attic)	Wood Framed Ceiling	2x4 @ 16 in. O. C.	R-11	None / None	0.083	Over Ceiling Joists: R-1.9 insul. Cavity / Frame: R-9.1 / 2x4 Inside Finish: Gypsum Board
R-30 Roof Attic/HP	Ceilings (below attic)	Wood Framed Ceiling	2x4 @ 24 in. O. C.	R-30	None / None	0.032	Over Ceiling Joists: R-20.9 insul. Cavity / Frame: R-9.1 / 2x4 Inside Finish: Gypsum Board
R-0 Floor No Crawlspace	Interior Floors	Wood Framed Floor	2x12 @ 16 in. O. C.	R-0	None / None	0.196	Floor Surface: Carpeted Floor Deck: Wood Siding/sheathing/decking Cavity / Frame: no insul. / 2x12 Ceiling Below Finish: Gypsum Board

OPAQUE SURFACE CONSTRUCTIONS

01	02	03	04	05	06	07	08
Construction Name	Surface Type	Construction Type	Framing	Total Cavity R-value	Interior / Exterior Continuous R-value	U-factor	Assembly Layers
R-19 Floor No Crawlspace	Interior Floors	Wood Framed Floor	2x6 @ 16 in. O. C.	R-19	None / None	0.049	Floor Surface: Carpeted Floor Deck: Wood Siding/sheathing/decking Cavity / Frame: R-19 in 5-1/2 in. (R-18) / 2x6 Ceiling Below Finish: Gypsum Board

BUILDING ENVELOPE - HERS VERIFICATION

01	02	03	04	05
Quality Insulation Installation (QII)	High R-value Spray Foam Insulation	Building Envelope Air Leakage	CFM50	CFM50
Required	Not Required	N/A	n/a	n/a

WATER HEATING SYSTEMS

01	02	03	04	05	06	07	08	09	10	11	12
Name	System Type	Distribution Type	Water Heater Name	Number of Units	Solar Heating System	Compact Distribution	HERS Verification	Water Heater Name (#)	Status	Verified Existing Condition	Existing Water Heating System
DHW Sys 1	Domestic Hot Water (DHW)	Standard	DHW Heater 1	1	n/a	None	n/a	DHW Heater 1 (1)	Existing	No	

www.apges.com
A Plus Green Energy Services
831.728.7717
408.310.0081
Federally Approved Contractor
Licensed California Contractor
A & B 665195
ICC Building Inspector B1 & B2
8023419
ICC CalGreen Inspector
CalCerts | CHEERS HERS Rater
CABEC Certified Energy Analyst
Build it Green
Certified Green Building Professional
Rater / Advisor

A Plus Green Energy Services
757 Freedom Blvd ▪ Watsonville, CA 95076 ▪ 408-310-0081 ▪ www.apges.com
CERTIFIED HERS RATER / ENERGY ANALYSTS
In tomorrow's California, the sustainability of our environment and the preservation of our beautiful resources will be aided by responsible and professional analysis of our energy needs and uses.
JAMES BLOMQUIST
CEA R19-15-30136
CERTIFIED GreenPoint RATER
CABEC California Association of Building Energy Consultants
CERTIFIED ENERGY PLANS EXAMINER
JAMES G. BLOMQUIST
HR08-10-3719

Energy Compliance

Clausen Rd Addition
38 Clausen Rd
Watsonville, CA 95076

8550

EN.1

1/9/2024

WATER HEATERS

01	02	03	04	05	06	07	08	09	10	11	12	13	14	15
Name	Heating Element Type	Tank Type	# of Units	Tank Vol. (gal)	Heating Efficiency Type	Efficiency	Rated Input Type	Input Rating or Pilot	Tank Insulation R-value (Int/Ext)	Standby Loss or Recovery Eff	1st Hr. Rating or Flow Rate	Tank Location	Status	Verified Existing Condition
DHW Heater 1	Gas	Small Storage	1	50	EF	0.57	Btu/Hr	75000	0	78	n/a		Existing	No

WATER HEATING - HERS VERIFICATION

01	02	03	04	05	06	07
Name	Pipe Insulation	Parallel Piping	Compact Distribution	Compact Distribution Type	Recirculation Control	Shower Drain Water Heat Recovery
DHW Sys 1 - 1/1	Not Required	Not Required	Not Required	None	Not Required	Not Required

SPACE CONDITIONING SYSTEMS

01	02	03	04	05	06	07	08	09	10	11	12
Name	System Type	Heating Unit Name	Heating Equipment Count	Cooling Unit Name	Cooling Equipment Count	Fan Name	Distribution Name	Required Thermostat Type	Status	Verified Existing Condition	Existing HVAC System
Res HVAC1	Heating and cooling system other	Heating Component 1	1	Cooling Component 1	1	HVAC Fan 1	Air Distribution System 1	n/a	Existing	No	
Res HVAC2	Heat pump heating cooling	Heat Pump System 2	1	Heat Pump System 2	1	HVAC Fan 2	Air Distribution System 2	Setback	New	No	

HVAC - HEATING UNIT TYPES

01	02	03	04	05
Name	System Type	Number of Units	Heating Efficiency	Heating Unit Brand
Heating Component 1	Central gas furnace	1	AFUE - 95	n/a

HVAC - HEAT PUMPS

01	02	03	04	05	06	07	08	09	10	11	12	13
			Heating				Cooling					
Name	System Type	Number of Units	Heating Efficiency Type	HSPF/HSPF2/COP	Cap 47	Cap 17	Cooling Efficiency Type	SEER/SEER2	EER/EER2/CEER	Zonally Controlled	Compressor Type	HERS Verification
Heat Pump System 2	Central split HP	1	HSPF	8.5	36000	20800	EERSEER	15	12	Not Zonal	Single Speed	Heat Pump System 2-hers-htpump

HVAC HEAT PUMPS - HERS VERIFICATION

01	02	03	04	05	06	07	08	09
Name	Verified Airflow	Airflow Target	Verified EER/EER2	Verified SEER/SEER2	Verified Refrigerant Charge	Verified HSPF/HSPF2	Verified Heating Cap 47	Verified Heating Cap 17
Heat Pump System 2-hers-htpump	Required	350	Not Required	Not Required	No	No	Yes	Yes

HVAC - DISTRIBUTION SYSTEMS

01	02	03	04	05	06	07	08	09	10	11	12	13	14	15	16
			Duct Ins. R-value		Duct Location		Surface Area								
Name	Type	Design Type	Supply	Return	Supply	Return	Supply	Return	Bypass Duct	Duct Leakage	HERS Verification	Status	Verified Existing Condition	Existing Distribution system	New Ducts 25 ft
Air Distribution System 1	Unconditioned attic	Non-Verified	R-6	R-6	Attic	Attic	n/a	n/a	No Bypass Duct	Existing (not specified)	Air Distribution	Existing	No		No

HVAC - DISTRIBUTION SYSTEMS

01	02	03	04	05	06	07	08	09	10	11	12	13	14	15	16
			Duct Ins. R-value		Duct Location		Surface Area								
Name	Type	Design Type	Supply	Return	Supply	Return	Supply	Return	Bypass Duct	Duct Leakage	HERS Verification	Status	Verified Existing Condition	Existing Distribution system	New Ducts 25 ft
											System 1-hers-dist				
Air Distribution System 2	Unconditioned attic	Non-Verified	R-6	R-6	Attic	Attic	n/a	n/a	No Bypass Duct	Sealed and Tested	Air Distribution System 2-hers-dist	New	n/a		No

HVAC DISTRIBUTION - HERS VERIFICATION

01	02	03	04	05	06	07	08	09
Name	Duct Leakage Verification	Duct Leakage Target (%)	Verified Duct Location	Verified Duct Design	Buried Ducts	Deeply Buried Ducts	Low-leakage Air Handler	Low Leakage Ducts Entirely in Conditioned Space
Air Distribution System 2-hers-dist	Yes	5.0	Not Required	Not Required	Not Required	Credit not taken	Not Required	No

HVAC - FAN SYSTEMS

01	02	03	04
Name	Type	Fan Power (Watts/CFM)	Name
HVAC Fan 1	HVAC Fan	0.45	n/a
HVAC Fan 2	HVAC Fan	0.58	HVAC Fan 2-hers-fan

HVAC FAN SYSTEMS - HERS VERIFICATION

01	02	03
Name	Verified Fan Watt Draw	Required Fan Efficacy (Watts/CFM)
HVAC Fan 2-hers-fan	Required	0.58

INDOOR AIR QUALITY (IAQ) FANS

01	02	03	04	05	06	07	08	09
Dwelling Unit	Airflow (CFM)	Fan Efficacy (W/CFM)	IAQ Fan Type	Includes Heat/Energy Recovery?	IAQ Recovery Effectiveness - SRE/ASRE	Includes Fault Indicator Display?	HERS Verification	Status
SFam IAQVentRpt 1-1	50	0.5	Balanced	Yes	75 / 75	No	Yes	

DOCUMENTATION AUTHOR'S DECLARATION STATEMENT

1. I certify that this Certificate of Compliance documentation is accurate and complete.

Documentation Author Name: James Blomquist	Documentation Author Signature: James Blomquist
Company: A Plus Green Energy Service	Signature Date: 2024-01-09 15:06:35
Address: 757 Freedom Blvd.	CEA/ HERS Certification Identification (If applicable): CC2006529
City/State/Zip: Watsonville, CA 95076	Phone: 408-310-0081

RESPONSIBLE PERSON'S DECLARATION STATEMENT

I certify the following under penalty of perjury, under the laws of the State of California:
1. I am eligible under Division 3 of the Business and Professions Code to accept responsibility for the building design identified on this Certificate of Compliance.
2. I certify that the energy features and performance specifications identified on this Certificate of Compliance conform to the requirements of Title 24, Part 1 and Part 6 of the California Code of Regulations.
3. The building design features or system design features identified on this Certificate of Compliance are consistent with the information provided on other applicable compliance documents, worksheets, calculations, plans and specifications submitted to the enforcement agency for approval with this building permit application.

Responsible Designer Name: Eric Q Ruiz	Responsible Designer Signature: Eric Q Ruiz
Company: Ruiz Building & Design	Date Signed: 2024-01-09 15:07:03
Address: 971 N. Main St., Ste. 14	License: Ruiz
City/State/Zip: Salinas, CA 93906	Phone: 831-800-7056

Digitally signed by CalCERTS. This digital signature is provided in order to secure the content of this registered document, and in no way implies Registration Provider responsibility for the accuracy of the information.

Easy to Verify at CalCERTS.com

www.apges.com
A Plus Green Energy Services
831.728.7717
408.310.0081

Federally Approved Contractor
Licensed California Contractor
A & B 665195
ICC Building Inspector B1 & B2
8023419
ICC CalGreen Inspector
CalCerts | CHEERS HERS Rater
CABEC Certified Energy Analyst
Build it Green
Certified Green Building Professional
Rater / Advisor

A Plus Green Energy Services
757 Freedom Blvd ▪ Watsonville, CA 95076 ▪ 408-310-0081 ▪ www.apges.com
CERTIFIED HERS RATER / ENERGY ANALYSTS
In tomorrow's California, the sustainability of our environment and the preservation of our beautiful resources will be aided by responsible and professional analysis of our energy needs and uses.
JAMES BLOMQUIST
CEA R19-15-30136
CERTIFIED GreenPoint RATER
CABEC California Association of Building Energy Consultants
CERTIFIED ENERGY PLANS EXAMINER
JAMES G. BLOMQUIST
NK08-10-3719

Energy Compliance

Clausen Rd Addition
38 Clausen Rd
Watsonville, CA 95076

8550

EN.2

1/9/2024

2022 Single-Family Residential Mandatory Requirements Summary

NOTE: Single-family residential buildings subject to the Energy Codes must comply with all applicable mandatory measures, regardless of the compliance approach used. Review the respective section for more information.
(04/2022)

Building Envelope:

§ 110.6(a)1:	**Air Leakage.** Manufactured fenestration, exterior doors, and exterior pet doors must limit air leakage to 0.3 CFM per square foot or less when tested per NFRC-400, ASTM E283, or AAMA/WDMA/CSA 101/I.S.2/A440-2011. *
§ 110.6(a)5:	**Labeling.** Fenestration products and exterior doors must have a label meeting the requirements of § 10-111(a).
§ 110.6(b):	**Field fabricated exterior doors and fenestration** products must use U-factors and solar heat gain coefficient (SHGC) values from Tables 110.6-A, 110.6-B, or JA4.5 for exterior doors. They must be caulked and/or weather-stripped. *
§ 110.7:	**Air Leakage.** All joints, penetrations, and other openings in the building envelope that are potential sources of air leakage must be caulked, gasketed, or weather stripped.
§ 110.8(a):	**Insulation Certification by Manufacturers.** Insulation must be certified by the Department of Consumer Affairs, Bureau of Household Goods and Services (BHGS).
§ 110.8(g):	**Insulation Requirements for Heated Slab Floors.** Heated slab floors must be insulated per the requirements of § 110.8(g).
§ 110.8(i):	**Roofing Products Solar Reflectance and Thermal Emittance.** The thermal emittance and aged solar reflectance values of the roofing material must meet the requirements of § 110.8(i) and be labeled per §10-113 when the installation of a cool roof is specified on the CF1R.
§ 110.8(j):	**Radiant Barrier.** When required, radiant barriers must have an emittance of 0.05 or less and be certified to the Department of Consumer Affairs.
§ 150.0(a):	**Roof Deck, Ceiling and Rafter Roof Insulation.** Roof decks in newly constructed attics in climate zones 4 and 8-16 area-weighted average U-factor not exceeding U-0.184. Ceiling and rafter roofs minimum R-22 insulation in wood-frame ceiling; or area-weighted average U-factor must not exceed 0.043. Rafter roof alterations minimum R-19 or area-weighted average U-factor of 0.054 or less. Attic access doors must have permanently attached insulation using adhesive or mechanical fasteners. The attic access must be gasketed to prevent air leakage. Insulation must be installed in direct contact with a roof or ceiling which is sealed to limit infiltration and exfiltration as specified in § 110.7, including but not limited to placing insulation either above or below the roof deck or on top of a drywall ceiling. *
§ 150.0(b):	**Loose-fill Insulation.** Loose fill insulation must meet the manufacturer's required density for the labeled R-value.
§ 150.0(c):	**Wall Insulation.** Minimum R-13 insulation in 2x4 inch wood framing wall or have a U-factor of 0.102 or less, or R-20 in 2x6 inch wood framing or have a U-factor of 0.071 or less. Opaque non-framed assemblies must have an overall assembly U-factor not exceeding 0.102. Masonry walls must meet Tables 150.1-A or B. *
§ 150.0(d):	**Raised-floor Insulation.** Minimum R-19 insulation in raised wood framed floor or 0.037 maximum U-factor. *
§ 150.0(f):	**Slab Edge Insulation.** Slab edge insulation must meet all of the following: have a water absorption rate, for the insulation material alone without facings, no greater than 0.3 percent; have a water vapor permeance no greater than 2.0 perm per inch; be protected from physical damage and UV light deterioration; and, when installed as part of a heated slab floor, meet the requirements of § 110.8(g).
§ 150.0(g)1:	**Vapor Retarder.** In climate zones 1 through 16, the earth floor of unvented crawl space must be covered with a Class I or Class II vapor retarder. This requirement also applies to controlled ventilation crawl space for buildings complying with the exception to §150.0(d).
§ 150.0(g)2:	**Vapor Retarder.** In climate zones 14 and 16, a Class I or Class II vapor retarder must be installed on the conditioned space side of all insulation in all exterior walls, vented attics, and unvented attics with air-permeable insulation.
§ 150.0(q):	**Fenestration Products.** Fenestration, including skylights, separating conditioned space from unconditioned space or outdoors must have a maximum U-factor of 0.45; or area-weighted average U-factor of all fenestration must not exceed 0.45. *

Fireplaces, Decorative Gas Appliances, and Gas Log:

§ 110.5(e)	**Pilot Light.** Continuously burning pilot lights are not allowed for indoor and outdoor fireplaces.
§ 150.0(e)1:	**Closable Doors.** Masonry or factory-built fireplaces must have a closable metal or glass door covering the entire opening of the firebox.
§ 150.0(e)2:	**Combustion Intake.** Masonry or factory-built fireplaces must have a combustion outside air intake, which is at least six square inches in area and is equipped with a readily accessible, operable, and tight-fitting damper or combustion-air control device. *
§ 150.0(e)3:	**Flue Damper.** Masonry or factory-built fireplaces must have a flue damper with a readily accessible control. *

Space Conditioning, Water Heating, and Plumbing System:

§ 110.0-§ 110.3:	**Certification.** Heating, ventilation, and air conditioning (HVAC) equipment, water heaters, showerheads, faucets, and all other regulated appliances must be certified by the manufacturer to the California Energy Commission. *
§ 110.2(a):	**HVAC Efficiency.** Equipment must meet the applicable efficiency requirements in Table 110.2-A through Table 110.2-N. *
§ 110.2(b):	**Controls for Heat Pumps with Supplementary Electric Resistance Heaters.** Heat pumps with supplementary electric resistance heaters must have controls that prevent supplementary heater operation when the heating load can be met by the heat pump alone; and in which the cut-on temperature for compression heating is higher than the cut-on temperature for supplementary heating, and the cut-off temperature for compression heating is higher than the cut-off temperature for supplementary heating. *
§ 110.2(c):	**Thermostats.** All heating or cooling systems not controlled by a central energy management control system (EMCS) must have a setback thermostat. *
§ 110.3(c)3:	**Insulation.** Unfired service water heater storage tanks and solar water-heating backup tanks must have adequate insulation, or tank surface heat loss rating.
§ 110.3(c)6:	**Isolation Valves.** Instantaneous water heaters with an input rating greater than 6.8 kBtu per hour (2 kW) must have isolation valves with hose bibbs or other fittings on both cold and hot water lines to allow for flushing the water heater when the valves are closed.

5/6/22

2022 Single-Family Residential Mandatory Requirements Summary

§ 110.5:	**Pilot Lights.** Continuously burning pilot lights are prohibited for natural gas: fan-type central furnaces; household cooking appliances (except appliances without an electrical supply voltage connection with pilot lights that consume less than 150 Btu per hour); and pool and spa heaters. *
§ 150.0(h)1:	**Building Cooling and Heating Loads.** Heating and/or cooling loads are calculated in accordance with the ASHRAE Handbook, Equipment Volume, Applications Volume, and Fundamentals Volume; the SMACNA Residential Comfort System Installation Standards Manual; or the ACCA Manual J using design conditions specified in § 150.0(h)2.
§ 150.0(h)3A:	**Clearances.** Air conditioner and heat pump outdoor condensing units must have a clearance of at least five feet from the outlet of any dryer.
§ 150.0(h)3B:	**Liquid Line Drier.** Air conditioners and heat pump systems must be equipped with liquid line filter driers if required, as specified by the manufacturer's instructions.
§ 150.0(j)1:	**Water Piping, Solar Water-heating System Piping, and Space Conditioning System Line Insulation.** All domestic hot water piping must be insulated as specified in § 609.11 of the California Plumbing Code. *
§ 150.0(j)2:	**Insulation Protection.** Piping insulation must be protected from damage, including that due to sunlight, moisture, equipment` maintenance, and wind as required by §120.3(b). Insulation exposed to weather must be water retardant and protected from UV light (no adhesive tapes). Insulation covering chilled water piping and refrigerant suction piping located outside the conditioned space must include, or be protected by, a Class I or Class II vapor retarder. Pipe insulation buried below grade must be installed in a waterproof and non-crushable casing or sleeve.
§ 150.0(n)1:	**Gas or Propane Water Heating Systems.** Systems using gas or propane water heaters to serve individual dwelling units must designate a space at least 2.5' x 2.5' x 7' suitable for the future installation of a heat pump water heater, and meet electrical and plumbing requirements, based on the distance between this designated space and the water heater location; and a condensate drain no more than 2" higher than the base of the water heater
§ 150.0(n)3:	**Solar Water-heating Systems.** Solar water-heating systems and collectors must be certified and rated by the Solar Rating and Certification Corporation (SRCC), the International Association of Plumbing and Mechanical Officials, Research and Testing (IAPMO R&T), or by a listing agency that is approved by the executive director.

Ducts and Fans:

§ 110.8(d)3:	**Ducts.** Insulation installed on an existing space-conditioning duct must comply with § 604.0 of the California Mechanical Code (CMC). If a contractor installs the insulation, the contractor must certify to the customer, in writing, that the insulation meets this requirement.
§ 150.0(m)1:	**CMC Compliance.** All air-distribution system ducts and plenums must meet CMC §§ 601.0-605.0 and ANSI/SMACNA-006-2006 HVAC Duct Construction Standards Metal and Flexible 3rd Edition. Portions of supply-air and return-air ducts and plenums must be insulated to R-6.0 or higher; ducts located entirely in conditioned space as confirmed through field verification and diagnostic testing (RA3.1.4.3.8) do not require insulation. Connections of metal ducts and inner core of flexible ducts must be mechanically fastened. Openings must be sealed with mastic, tape, or other duct-closure system that meets the applicable UL requirements, or aerosol sealant that meets UL 723. The combination of mastic and either mesh or tape must be used to seal openings greater than ¼", If mastic or tape is used. Building cavities, air handler support platforms, and plenums designed or constructed with materials other than sealed sheet metal, duct board or flexible duct must not be used to convey conditioned air. Building cavities and support platforms may contain ducts; ducts installed in these spaces must not be compressed. *
§ 150.0(m)2:	**Factory-Fabricated Duct Systems.** Factory-fabricated duct systems must comply with applicable requirements for duct construction, connections, and closures; joints and seams of duct systems and their components must not be sealed with cloth back rubber adhesive duct tapes unless such tape is used in combination with mastic and draw bands.
§ 150.0(m)3:	**Field-Fabricated Duct Systems.** Field-fabricated duct systems must comply with applicable requirements for: pressure-sensitive tapes, mastics, sealants, and other requirements specified for duct construction.
§ 150.0(m)7:	**Backdraft Damper.** Fan systems that exchange air between the conditioned space and outdoors must have backdraft or automatic dampers.
§ 150.0(m)8:	**Gravity Ventilation Dampers.** Gravity ventilating systems serving conditioned space must have either automatic or readily accessible, manually operated dampers in all openings to the outside, except combustion inlet and outlet air openings and elevator shaft vents.
§ 150.0(m)9:	**Protection of Insulation.** Insulation must be protected from damage due tosunlight, moisture, equipment maintenance, and wind. Insulation exposed to weather must be suitable for outdoor service (e.g., protected by aluminum, sheet metal, painted canvas, or plastic cover). Cellular foam insulation must be protected as above or painted with a water retardant and solar radiation-resistant coating.
§ 150.0(m)10:	**Porous Inner Core Flex Duct.** Porous inner cores of flex ducts must have a non-porous layer or air barrier between the inner core and outer vapor barrier.
§ 150.0(m)11:	**Duct System Sealing and Leakage Test.** When space conditioning systems use forced air duct systems to supply conditioned air to an occupiable space, the ducts must be sealed and duct leakage tested, as confirmed through field verification and diagnostic testing, in accordance with Reference Residential Appendix RA3.1.
§ 150.0(m)12:	**Air Filtration.** Space conditioning systems with ducts exceeding 10 feet and the supply side of ventilation systems must have MERV 13 or equivalent filters. Filters for space conditioning systems must have a two inch depth or can be one inch if sized per Equation 150.0-A. Clean-filter pressure drop and labeling must meet the requirements in §150.0(m)12. Filters must be accessible for regular service. Filter racks or grilles must use gaskets, sealing, or other means to close gaps around the inserted filters to and prevents air from bypassing the filter. *

5/6/22

2022 Single-Family Residential Mandatory Requirements Summary

§ 150.0(m)13:	**Space Conditioning System Airflow Rate and Fan Efficacy.** Space conditioning systems that use ducts to supply cooling must have a hole for the placement of a static pressure probe, or a permanently installed static pressure probe in the supply plenum. Airflow must be ≥ 350 CFM per ton of nominal cooling capacity, and an air-handling unit fan efficacy ≤ 0.45 watts per CFM for gas furnace air handlers and ≤ 0.58 watts per CFM for all others. Small duct high velocity systems must provide an airflow ≥ 250 CFM per ton of nominal cooling capacity, and an air-handling unit fan efficacy ≤ 0.62 watts per CFM. Field verification testing is required in accordance with Reference Residential Appendix RA3.3. *

Ventilation and Indoor Air Quality:

§ 150.0(o)1:	**Requirements for Ventilation and Indoor Air Quality**. All dwelling units must meet the requirements of ASHRAE Standard 62.2, Ventilation and Acceptable Indoor Air Quality in Residential Buildings subject to the amendments specified in § 150.0(o)1. *
§ 150.0(o)1B:	**Central Fan Integrated (CFI) Ventilation Systems.** Continuous operation of CFI air handlers is not allowed to provide the whole-dwelling unit ventilation airflow required per §150.0(o)1C. A motorized damper(s) must be installed on the ventilation duct(s) that prevents all airflow through the space conditioning duct system when the damper(s) is closed andcontrolled per §150.0(o)1Biii&iv. CFI ventilation systems must have controls that track outdoor air ventilation run time, and either open or close the motorized damper(s) for compliance with §150.0(o)1C.
§ 150.0(o)1C:	**Whole-Dwelling Unit Mechanical Ventilation for Single-Family Detached and townhouses .** Single-family detached dwelling units, and attached dwelling units not sharing ceilings or floors with other dwelling units, occupiable spaces, public garages, or commercial spaces must have mechanical ventilation airflow specified in § 150.0(o)1Ci-iii.
§ 150.0(o)1G:	**Local Mechanical Exhaust.** Kitchens and bathrooms must have local mechanical exhaust; nonenclosed kitchens must have demand-controlled exhaust system meeting requirements of §150.0(o)1Giii,enclosed kitchens and bathrooms can use demand-controlled or continuous exhaust meeting §150.0(o)1Giii-iv. Airflow must be measured by the installer per §150.0(o)1Gv, and rated for sound per §150.0(o)1Gvi. *
§ 150.0(o)1H&I:	**Airflow Measurement and Sound Ratings of Whole-Dwelling Unit Ventilation Systems.** The airflow required per § 150.0(o)1C must be measured by using a flow hood, flow grid, or other airflow measuring device at the fan's inlet or outlet terminals/grilles per Reference Residential Appendix RA3.7. Whole-Dwelling unit ventilation systems must be rated for sound per ASHRAE 62.2 §7.2 at no less than the minimum airflow rate required by §150.0(o)1C.
§ 150.0(o)2:	**Field Verification and Diagnostic Testing.** Whole-Dwelling Unit ventilation airflow, vented range hood airflow and sound rating, and HRV and ERV fan efficacy must be verified in accordance with Reference Residential Appendix RA3.7. Vented range hoods must be verified per Reference Residential Appendix RA3.7.4.3 to confirm if it is rated by HVI or AHAM to comply with the airflow rates and sound requirements per §150.0(o)1G

Pool and Spa Systems and Equipment:

§ 110.4(a):	**Certification by Manufacturers.** Any pool or spa heating system or equipment must be certified to have all of the following: compliance with the Appliance Efficiency Regulations and listing in MAEDbS; an on-off switch mounted outside of the heater that allows shutting off the heater without adjusting the thermostat setting; a permanent weatherproof plate or card with operating instructions; and must not use electric resistance heating. *
§ 110.4(b)1:	**Piping.** Any pool or spa heating system or equipment must be installed with at least 36 inches of pipe between the filter and the heater, or dedicated suction and return lines, or built-in or built-up connections to allow for future solar heating.
§ 110.4(b)2:	**Covers.** Outdoor pools or spas that have a heat pump or gas heater must have a cover.
§ 110.4(b)3:	**Directional Inlets and Time Switches for Pools.** Pools must have directional inlets that adequately mix the pool water, and a time switch that will allow all pumps to be set or programmed to run only during off-peak electric demand periods.
§ 110.5:	**Pilot Light.** Natural gas pool and spa heaters must not have a continuously burning pilot light.
§ 150.0(p):	**Pool Systems and Equipment Installation.** Residential pool systems or equipment must meet the specified requirements for pump sizing, flow rate, piping, filters, and valves. *

Lighting:

§ 110.9:	**Lighting Controls and Components.** All lighting control devices and systems, ballasts, and luminaires must meet the applicable requirements of § 110.9. *
§ 150.0(k)1A:	**Luminaire Efficacy.** All installed luminaires must meet the requirements in Table 150.0-A, except lighting integral to exhaust fans, kitchen range hoods, bath vanity mirrors, and garage door openers; navigation lighting less than 5 watts; and lighting internal to drawers, cabinets, and linen closets with an efficacy of at least 45 lumens per watt.
§ 150.0(k)1B:	**Screw based luminaires.** Screw based luminaires must contain lamps that comply with Reference Joint Appendix JA8. *
§ 150.0(k)1C:	**Recessed Downlight Luminaires in Ceilings.** Luminaires recessed into ceilings must not contain screw based sockets, must be airtight, and must be sealed with a gasket or caulk. California Electrical Code § 410.116 must also be met.
§ 150.0(k)1D:	**Light Sources in Enclosed or Recessed Luminaires.** Lamps and other separable light sources that are not compliant with the JA8 elevated temperature requirements, including marking requirements, must not be installed in enclosed or recessed luminaires.
§ 150.0(k)1E:	**Blank Electrical Boxes.** The number of electrical boxes that are more than five feet above the finished floor and do not contain a luminaire or other device shall be no more than the number of bedrooms. These boxes must be served by a dimmer, vacancy sensor control, low voltage wiring, or fan speed control.
§ 150.0(k)1F:	**Lighting Integral to Exhaust Fans.** Lighting integral to exhaust fans (except when installed by the manufacturer in kitchen exhaust hoods) must meet the applicable requirements of § 150.0(k). *

5/6/22

2022 Single-Family Residential Mandatory Requirements Summary

§ 150.0(k)1G:	**Screw based luminaires.** Screw based luminaires must contain lamps that comply with Reference Joint Appendix JA8. *
§ 150.0(k)1H:	**Light Sources in Enclosed or Recessed Luminaires.** Lamps and other separable light sources that are not compliant with the JA8 elevated temperature requirements, including marking requirements, must not be installed in enclosed or recessed luminaires.
§ 150.0(k)1I:	**Light Sources in Drawers, Cabinets, and Linen Closets.** Light sources internal to drawers, cabinetry or linen closets are not required to comply with Table 150.0-A or be controlled by vacancy sensors provided that they are rated to consume no more than 5 watts of power, emit no more than 150 lumens, and are equipped with controls that automatically turn the lighting off when the drawer, cabinet or linen closet is closed.
§ 150.0(k)2A:	**Interior Switches and Controls.** All forward phase cut dimmers used with LED light sources must comply with NEMA SSL 7A.
§ 150.0(k)2B:	**Interior Switches and Controls.** Exhaust fans must be controlled separately from lighting systems. *
§ 150.0(k)2A:	**Accessible Controls.** Lighting must have readily accessible wall-mounted controls that allow the lighting to be manually turned on and off. *
§ 150.0(k)2B:	**Multiple Controls.** Controls must not bypass a dimmer, occupant sensor, or vacancy sensor function if the dimmer or sensor is installed to comply with § 150.0(k).
§ 150.0(k)2C:	**Mandatory Requirements.** Lighting controls must comply with the applicable requirements of § 110.9.
§ 150.0(k)2D:	**Energy Management Control Systems.** An energy management control system (EMCS) may be used to comply with dimming, occupancy, and control requirements if it provides the functionality of the specified control per § 110.9 and the physical controls specified in § 150.0(k)2A.
§ 150.0(k)2E:	**Automatic Shutoff Controls.** In bathrooms, garages, laundry rooms, utility rooms and walk-in closets, at least one installed luminaire must be controlled by an occupancy or vacancy sensor providing automatic-off functionality. Lighting inside drawers and cabinets with opaque fronts or doors must have controls that turn the light off when the drawer or door is closed.
§ 150.0(k)2F:	**Dimmers.** Lighting in habitable spaces (e.g., living rooms, dining rooms, kitchens, and bedrooms) must have readily accessible wall-mounted dimming controls that allow the lighting to be manually adjusted up and down. Forward phase cut dimmers controlling LED light sources in these spaces must comply with NEMA SSL 7A.
§ 150.0(k)2K:	**Independent controls.** Integrated lighting of exhaust fans shall be controlled independently from the fans. Lighting under cabinets or shelves, lighting in display cabinets, and switched outlets must be controlled separately from ceiling-installed lighting.
§ 150.0(k)3A:	**Residential Outdoor Lighting.** For single-family residential buildings, outdoor lighting permanently mounted to a residential building, or to other buildings on the same lot, must have a manual on/off switch and either a photocell and motion sensor or automatic time switch control) or an astronomical time clock. An energy management control system that provides the specified control functionality and meets all applicable requirements may be used to meet these requirements.
§ 150.0(k)4:	**Internally illuminated address signs.** Internally illuminated address signs must either comply with § 140.8 or consume no more than 5 watts of power.
§ 150.0(k)5:	**Residential Garages for Eight or More Vehicles.** Lighting for residential parking garages for eight or more vehicles must comply with the applicable requirements for nonresidential garages in §§ 110.9, 130.0, 130.1, 130.4, 140.6, and 141.0.

Solar Readiness:

§ 110.10(a)1:	**Single-family Residences.** Single-family residences located in subdivisions with 10 or more single-family residences and where the application for a tentative subdivision map for the residences has been deemed complete and approved by the enforcement agency, which do not have a photovoltaic system installed, must comply with the requirements of § 110.10(b)-(e).
§110.10(b)1A:	**Minimum Solar Zone Area.** The solar zone must have a minimum total area as described below. The solar zone must comply with access, pathway, smoke ventilation, and spacing requirements as specified in Title 24, Part 9 or other parts of Title 24 or in any requirements adopted by a local jurisdiction. The solar zone total area must be comprised of areas that have no dimension less than 5 feet and are no less than 80 square feet each for buildings with roof areas less than or equal to 10,000 square feet or no less than 160 square feet each for buildings with roof areas greater than 10,000 square feet. For single-family residences, the solar zone must be located on the roof or overhang of the building and have a total area no less than 250 square feet. *
§ 110.10(b)2:	**Azimuth.** All sections of the solar zone located on steep-sloped roofs must have an azimuth between 90-300° of true north.
§ 110.10(b)3A:	**Shading.** The solar zone must not contain any obstructions, including but not limited to: vents, chimneys, architectural features, and roof mounted equipment. *
§ 110.10(b)3B:	**Shading.** Any obstruction located on the roof or any other part of the building that projects above a solar zone must be located at least twice the horizontal distance of the height difference between the highest point of the obstruction and the horizontal projection of the nearest point of the solar zone, measured in the vertical plane. *
§ 110.10(b)4:	**Structural Design Loads on Construction Documents.** For areas of the roof designated as a solar zone, the structural design loads for roof dead load and roof live load must be clearly indicated on the construction documents.
§ 110.10(c):	**Interconnection Pathways.** The construction documents must indicate: a location reserved for inverters and metering equipment and a pathway reserved for routing of conduit from the solar zone to the point of interconnection with the electrical service; and for single-family residences and central water-heating systems, a pathway reserved for routing plumbing from the solar zone to the water-heating system.
§ 110.10(d):	**Documentation.** A copy of the construction documents or a comparable document indicating the information from § 110.10(b)-(c) must be provided to the occupant.
§ 110.10(e)1:	**Main Electrical Service Panel.** The main electrical service panel must have a minimum busbar rating of 200 amps.
§ 110.10(e)2:	**Main Electrical Service Panel.** The main electrical service panel must have a reserved space to allow for the installation of a double pole circuit breaker for a future solar electric installation. The reserved space must be permanently marked as "For Future Solar Electric."

Electric and Energy Storage Ready:

5/6/22

2022 Single-Family Residential Mandatory Requirements Summary

§ 150.0(s)	**Energy Storage System (ESS) Ready.** All single-family residences must meet all of the following: Either ESS-ready interconnection equipment with backed up capacity of 60 amps or more and four or more ESS supplied branch circuits, *or* a dedicated raceway from the main service to a subpanel that supplies the branch circuits in § 150.0(s); at least four branch circuits must be identified and have their source collocated at a single panelboard suitable to be supplied by the ESS, with one circuit supplying the refrigerator, one lighting circuit near the primary exit, and one circuit supplying a sleeping room receptacle outlet; main panelboard must have a minimum busbar rating of 225 amps; sufficient space must be reserved to allow future installation of a system isolation equipment/transfer switch within 3' of the main panelboard, with raceways installed between the panelboard and the switch location to allow the connection of backup power source.
§ 150.0(t)	**Heat Pump Space Heater Ready.** Systems using gas or propane furnaces to serve individual dwelling units must include: A dedicated unobstructed 240V branch circuit wiring installed within 3' of the furnace with circuit conductors rated at least 30 amps with the blank cover identified as "240V ready;" and a reserved main electrical service panel space to allow for the installation of a double pole circuit breaker permanently marked as "For Future 240V use."
§ 150.0(u)	**Electric Cooktop Ready.** Systems using gas or propane cooktop to serve individual dwelling units must include: A dedicated unobstructed 240V branch circuit wiring installed within 3' of the cooktop with circuit conductors rated at least 50 amps with the blank cover identified as "240V ready;" and a reserved main electrical service panel space to allow for the installation of a double pole circuit breaker permanently marked as "For Future 240V use."
§ 150.0(v)	**Electric Clothes Dryer Ready.** Clothes dryer locations with gas or propane plumbing to serve individual dwelling units must include: A dedicated unobstructed 240V branch circuit wiring installed within 3' of the dryer location with circuit conductors rated at least 30 amps with the blank cover identified as "240V ready;" and a reserved main electrical service panel space to allow for the installation of a double pole circuit breaker permanently marked as "For Future 240V use."

*Exceptions may apply.

5/6/22

HVAC SYSTEM HEATING AND COOLING LOADS SUMMARY

Project Name: Clausen Rd Addition — Date: 1/9/2024
System Name: Res HVAC — Floor Area: 2,120

ENGINEERING CHECKS		
Number of Systems	1
Heating System	
Output per System	58,000
Total Output (Btuh)	58,000
Output (Btuh/sqft)	27.4
Cooling System	
Output per System	0
Total Output (Btuh)	0
Total Output (Tons)	0.0
Total Output (Btuh/sqft)	0.0
Total Output (sqft/Ton)	0.0
Air System	
CFM per System	900
Airflow (cfm)	900
Airflow (cfm/sqft)	0.42
Airflow (cfm/Ton)	0.0
Outside Air (%)	0.0%
Outside Air (cfm/sqft)	0.00
Note: values above given at ARI conditions	

SYSTEM LOAD	COIL COOLING PEAK			COIL HTG. PEAK	
	CFM	Sensible	Latent	CFM	Sensible
Total Room Loads	1,462	31,472	1,003	1,926	72,545
Return Vented Lighting		0			
Return Air Ducts		0			2,995
Return Fan		0			0
Ventilation	0	0	0	0	0
Supply Fan		0			0
Supply Air Ducts		0			2,995
TOTAL SYSTEM LOAD		31,472	1,003		78,535
HVAC EQUIPMENT SELECTION					
FAU no AC		0	0		58,000
Total Adjusted System Output (Adjusted for Peak Design conditions)		0	0		58,000
TIME OF SYSTEM PEAK		Aug 3 PM			Jan 1 AM

HEATING SYSTEM PSYCHROMETRICS (Airstream Temperatures at Time of Heating Peak)

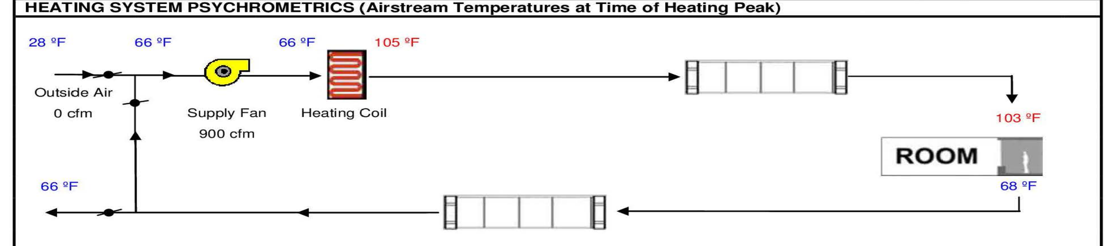

COOLING SYSTEM PSYCHROMETRICS (Airstream Temperatures at Time of Cooling Peak)

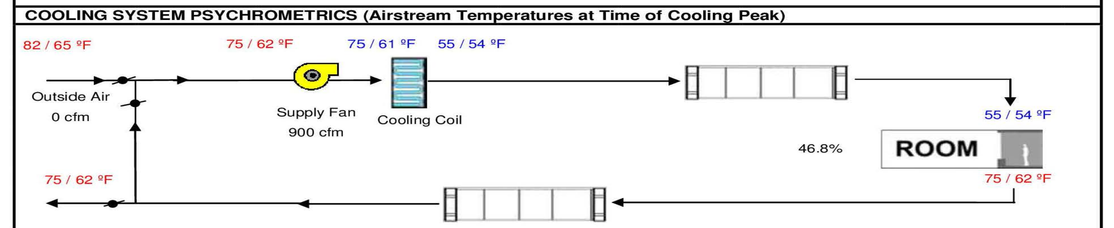

HVAC SYSTEM HEATING AND COOLING LOADS SUMMARY

Project Name: Clausen Rd Addition — Date: 1/9/2024
System Name: Res HVAC — Floor Area: 1,210

ENGINEERING CHECKS	
Number of Systems	1
Heating System	
Output per System	36,000
Total Output (Btuh)	36,000
Output (Btuh/sqft)	29.8
Cooling System	
Output per System	36,000
Total Output (Btuh)	36,000
Total Output (Tons)	3.0
Total Output (Btuh/sqft)	29.8
Total Output (sqft/Ton)	403.3
Air System	
CFM per System	1,200
Airflow (cfm)	1,200
Airflow (cfm/sqft)	0.99
Airflow (cfm/Ton)	400.0
Outside Air (%)	0.0%
Outside Air (cfm/sqft)	0.00
Note: values above given at ARI conditions	

SYSTEM LOAD	COIL COOLING PEAK			COIL HTG. PEAK	
	CFM	Sensible	Latent	CFM	Sensible
Total Room Loads	531	11,245	573	327	12,892
Return Vented Lighting		0			
Return Air Ducts		398			532
Return Fan		0			0
Ventilation	0	0	0	0	0
Supply Fan		0			0
Supply Air Ducts		398			532
TOTAL SYSTEM LOAD		12,041	573		13,956
HVAC EQUIPMENT SELECTION					
Heat Pump 2		35,138	0		23,725
Total Adjusted System Output (Adjusted for Peak Design conditions)		35,138	0		23,725
TIME OF SYSTEM PEAK		Aug 3 PM			Jan 1 AM

HEATING SYSTEM PSYCHROMETRICS (Airstream Temperatures at Time of Heating Peak)

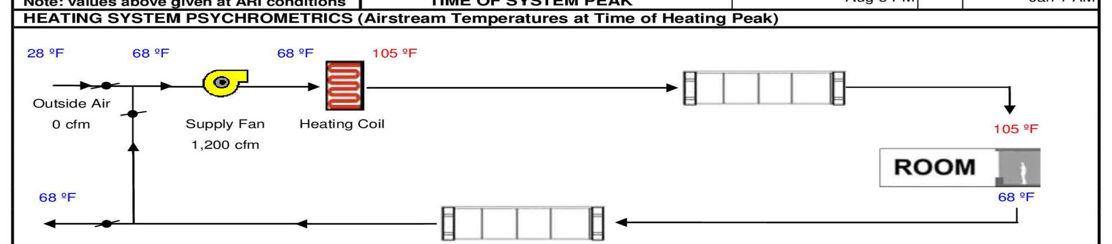

COOLING SYSTEM PSYCHROMETRICS (Airstream Temperatures at Time of Cooling Peak)

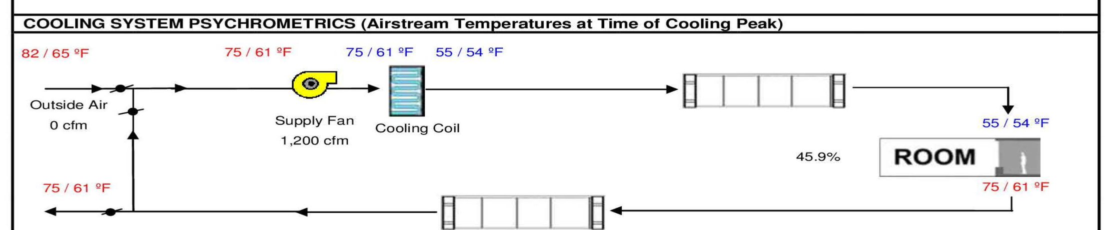

ENERGY NOTES:

Attention designers, owners, builders. It is your responsibility to review the T24 documents for the required building features, and HERS measures.
If you have any questions, call before you build or buy.

Electric Ready & Renewables- New Construction : §150.0—Each electric ready item requires breaker space and labeling in panel. Single Family: Electric Ready 150.0(n) Water Heaters. Gas or propane water heaters must be installed in or adjacent to a space large enough to accommodate a Heat Pump Water Heater (2.5' x 2.5' x 7'). Within 3 ft of water heater 10/3 electrical feed. More than 3 ft 240 volt / 30 amp electrical feed.
150.0(t) Furnaces. Provide a 240 volt / 30 amp electrical feed to the furnace for future heat pump.
150.0(u) Cooktops. Include 240 volt / 50 amp feed for future cooktop
150.0(v) Dryers. Include 240 volt / 30 amp feed for dryer if the unit has a gas line for a dryer.

Solar Access Roof Area (SARA) - New Construction §140.10(a) / §170.2(f)
SARA includes: The area of a building's roof space capable of structurally supporting a PV system AND ☐ The area of all roof space on covered parking areas, carports and all other newly constructed structures on the site that are compatible with supporting a PV system per CA Building Code §1511.2 ☐ Exceptions: ☐ Any roof area that has < 70% annual solar access ☐ Occupied roof areas as specified by CA Building Code §503.1.4 ☐ Roof area that is otherwise not available due to compliance with other building code requirements if confirmed by the Executive Director.

Single Family: Solar Photovoltaic (PV) section §150.1(c)14 See section for solar sizing and exceptions

Energy Storage System (Battery Ready) - New Construction §150.0(s)
At least one of the following shall be provided: Interconnection equipment with a minimum backed up capacity of 60 amps. Or A dedicated raceway from the main service to a subpanel that supplies the branch circuits. Or A minimum of four branch circuits shall be identified— feeding: ☐ Refrigerator ☐ One lighting circuit near the primary egress ☐ A sleeping room receptacle outlet ☐ Main panel must be minimum 225 amps ☐ Sufficient space shall be reserved to allow future installation of a system isolation equipment or transfer switch within 3 feet of the main panelboard ☐ Raceways shall be installed between the panelboard and the system isolation equipment or transfer switch location to allow the connection of backup power source.

ACCA Manual J, D&S calculations are required to be submitted for plan review, followed by installing contractor and field inspected for compliance. T24 Load calc is based on ACCA J and may be used as sizing reference only. The load calc from the T24 doesn't include duct loss. See the T24 load calc page.

SAMPLE EQUIPMENT (Use any equipment that matches the min efficiencies)

Indoor Air Quailty (IAQ) House Fan: Per ASHRAE 62.2
50 CFM / 1 Sones Sound Rating Max / Sample Model # Broan QTXE0
If this project is an addition under a 1,000 sf, the IAQ fan is not required.
For New Kitchen Hood sizing see Table 150.0-G

Dwelling Unit Floor Area (ft²)	Hood Over Electric Range	Hood Over Natural Gas Range
> 1500	50% CE or 110 CFM	70% CE or 180 CFM
> 1000 - 1500	50% CE or 110 CFM	80% CE or 250 CFM
750 - 1000	55% CE or 130 CFM	85% CE or 280 CFM
< 750	65% CE or 160 CFM	85% CE or 280 CFM

Water Heater: Existing | EF: NA

HERS FEATURE SUMMARY is located in the CF1R. Make sure you review all of the REQUIREMENTS prior to beginning construction. For HERS Testing call 831-728-5503 for an appointment.

Quality insulation installation (QII)
- **Indoor air quality ventilation**
- **Minimum Airflow**
- **Fan Efficacy Watts/CFM**
- **Verified heat pump rated heating capacity**
- **Duct leakage testing**
- **Duct Sealing required if a duct system component, plenum, or air handling unit is altered**

www.apges.com
A Plus Green Energy Services
831.728.7717
408.310.0081

Federally Approved Contractor

Licensed California Contractor
A & B 665195

ICC Building Inspector B1 & B2
8023419

ICC CalGreen Inspector

CalCerts | CHEERS HERS Rater

CABEC Certified Energy Analyst

Build it Green
Certified Green Building Professional
Rater / Advisor

A Plus Green Energy Services
757 Freedom Blvd ▪ Watsonville, CA 95076 ▪ 408-310-0081 ▪ www.apges.com

CERTIFIED HERS RATER / ENERGY ANALYSTS
In tomorrow's California, the sustainability of our environment and the preservation of our beautiful resources will be aided by responsible and professional analysis of our energy needs and uses.

JAMES BLOMQUIST
CEA R19-15-30136

CERTIFIED GreenPoint RATER

CABEC
California Association of Building Energy Consultants
CERTIFIED ENERGY PLANS EXAMINER
JAMES G. BLOMQUIST
NR08-10-3719

Energy Compliance

Clausen Rd Addition
38 Clausen Rd
Watsonville, CA 95076

8550

EN.3

1/9/2024

Clausen Rd Addition

CALIFORNIA MANDATORY GREEN MEASURES

Division 4.5 ENVIRONMENTAL QUALITY CONT.

Description	Sheet
4.504.2.1 Adhesives, sealants and caulks. Adhesives, sealants and caulks used on the project shall meet the requirements of the following standards unless more stringent local or regional air pollution or air quality management district rules apply: 1. Adhesives, adhesive bonding primers, adhesive primers, sealants, sealant primers, and caulks shall comply with local or regional air pollution control or air quality management district rules where applicable or SCAQMD Rule 1168 VOC limits, as shown in Table 4.504.1 or 4.504.2, as applicable. Such products also shall comply with the Rule 1168 prohibition on the use of certain toxic compounds (chloroform, ethylene dichloride, methylene chloride, perchloroethylene and trichloroethylene), except for aerosol products, as specified in Subsection 2 below. 2. Aerosol adhesives, and smaller unit sizes of adhesives, and sealant or caulking compounds (in units of product, less packaging, which do not weigh more than 1 pound and do not consist of more than 16 fluid ounces) shall comply with statewide VOC standards and other requirements, including prohibitions on use of certain toxic compounds, of California Code of Regulations, Title 17, commencing with Section 94507.	A3.0
4.504.2.2 Paints and coatings. Architectural paints and coatings shall comply with VOC limits in Table 1 of the ARB Architectural Suggested Control Measure, as shown in Table 4.504.3, unless more stringent local limits apply. The VOC content limit for coatings that do not meet the definitions for the specialty coatings categories listed in Table 4.504.3 shall be determined by classifying the coating as a Flat, Nonflat or Nonflat-high Gloss coating, based on its gloss, as defined in subsections 4.21, 4.36, and 4.37 of the 2007 California Air Resources Board, Suggested Control Measure, and the corresponding Flat, Nonflat or Nonflat- high Gloss VOC limit in Table 4.504.3 shall apply.	A3.0
4.504.2.3 Aerosol paints and coatings. Aerosol paints and coatings shall meet the Product-weighted MIR Limits for ROC in Section 94522(a)(2) and other requirements, including prohibitions on use of certain toxic compounds and ozone depleting substances, in Sections 94522(e)(1) and (f)(1) of California Code of Regulations, Title 17, commencing with Section 94520; and in areas under the jurisdiction of the Bay Area Air Quality Management District additionally comply with the percent VOC by weight of product limits of Regulation 8, Rule 49.	A3.0
4.504.2.4 Verification. Verification of compliance with this section shall be provided at the request of the enforcing agency. Documentation may include, but is not limited to, the following: 1. Manufacturer's product specification. 2. Field verification of on-site product containers	A3.0
4.504.3 Carpet systems. Carpet systems. All carpet installed in the building interior shall meet the requirements of the California Department of Public Health, "Standard Method for the Testing and Evaluation of Volatile Organic Chemical Emissions from Indoor Sources Using Environmental Chambers," Version 1.2, January 2017 (Emission testing method for California Specification 01350). See California Department of Public Health's website for certification programs and testing labs. https://www.cdph.ca.gov/Programs/CCDPHP/DEODC/ EHLB/IAQ/Pages/VOC.aspx	A3.0
4.504.3.1 Carpet cushion. Carpet cushion. All carpet cushion installed in the building interior shall meet the requirements of the California Department of Public Health, "Standard Method for the Testing and Evaluation of Volatile Organic Chemical Emissions from Indoor Sources Using Environmental Chambers," Version 1.2, January 2017 (Emission testing method for California Specification 01350). See California Department of Public Health's website for certification programs and testing labs. https://www.cdph.ca.gov/Programs/CCDPHP/DEODC/ EHLB/IAQ/Pages/VOC.aspx	A3.0
4.504.3.2 Carpet adhesive. All carpet adhesive shall meet the requirements of Table 4.504.1.	A3.0
4.504.4 Resilient flooring systems. Where resilient flooring is installed, at least 80 percent of floor area receiving resilient flooring shall comply with one or more of the following: 1. Products compliant with the California Department of Public Health, "Standard Method for the Testing and Evaluation of Volatile Organic Chemical Emissions from Indoor Sources Using Environmental Chambers," Version 1.1, February 2010 (also known as Specification 01350), certified as a CHPS Low-Emitting Material in the Collaborative for High Performance Schools (CHPS) High Performance Products Database. 2. Products certified under UL GREENGUARD Gold (formerly the Greenguard Children & Schools program). 3. Certification under the Resilient Floor Covering Institute (RFCI) Floor Score program. 4. Meet the California Department of Public Health, "Standard Method for the Testing and Evaluation of Volatile Organic Chemical Emissions from Indoor Sources Using Environmental Chambers," Version 1.1, February 2010 (also known as Specification 01350).	A3.0
4.504.5 Composite wood products. Hardwood plywood, particleboard and medium density fiberboard composite wood products used on the interior or exterior of the building shall meet the requirements for formaldehyde as specified in ARB's Air Toxics Control Measure for Composite Wood (17 CCR 93120 et seq.), by or before the dates specified in those sections, as shown in Table 4.504.5.	A3.0
4.504.5.1 Documentation. Verification of compliance with this section shall be provided as requested by the enforcing agency. Documentation shall include at least one of the following: 1. Product certifications and specifications. 2. Chain of custody certifications. 3. Product labeled and invoiced as meeting the Composite Wood Products regulation (see CCR, Title 17, Section 93120, et seq.). 4. Exterior grade products marked as meeting the PS-1 or PS-2 standards of the Engineered Wood Association, the Australian AS/NZS 2269, European 636 3S, and Canadian CSA O121, CSA O151, CSA O153 and CSA O325 standards. 5. Other methods acceptable to the enforcing agency.	A3.0
4.505.1 General. Buildings shall meet or exceed the provisions of the California Building Standards Code.	A6
4.505.2 Concrete slab foundations. Concrete slab foundations required to have a vapor retarder by the CBC, Chapter 19 or concrete slab-on-ground floors required to have a vapor retarder by the California Residential Code, Chapter 5, shall also comply with this section.	A6
4.505.2.1 Capillary break. A capillary break shall be installed in compliance with at least one of the following: 1. A 4-inch-thick (101.6 mm) base of 1/2 inch (12.7 mm) or larger clean aggregate shall be provided with a vapor retarder in direct contact with concrete and a concrete mix design, which will address bleeding, shrinkage, and curling, shall be used. For additional information, see American Concrete Institute, ACI 302.2R-06. 2. Other equivalent methods approved by the enforcing agency. 3. A slab design specified by a licensed design professional.	A6
4.505.3 Moisture content of building materials. Building materials with visible signs of water damage shall not be installed. Wall and floor framing shall not be enclosed when the framing members exceed 19-percent moisture content. Moisture content shall be verified in compliance with the following: 1. Moisture content shall be determined with either a probe-type or contact-type moisture meter. Equivalent moisture verification methods may be approved by the enforcing agency and shall satisfy requirements found in Section 101.8 of this code.2. Moisture readings shall be taken at a point 2 feet (610 mm) to 4 feet (1219 mm) from the grade stamped end of each piece to be verified. 3. At least three random moisture readings shall be performed on wall and floor framing with documentation acceptable to the enforcing agency provided at the time of approval to enclose the wall and floor framing. Insulation products which are visibly wet or have a high moisture content shall be replaced or allowed to dry prior to enclosure in wall or floor cavities. Wet-applied insulation products shall follow the manufacturers' drying recommendations prior to enclosure.	A6
4.506.1 Bathroom exhaust fans. Each bathroom shall be mechanically ventilated and shall comply with the following: 1. Fans shall be ENERGY STAR compliant and be ducted to terminate outside the building. 2. Unless functioning as a component of a whole house ventilation system, fans must be controlled by a humidity control. a. Humidity controls shall be capable of adjustment between a relative humidity range of ≤ 50 percent to a maximum of 80 percent. A humidity control may utilize manual or automatic means of adjustment. b. A humidity control may be a separate component to the exhaust fan and is not required to be integral (i.e., built-in). **Notes:** 1. For the purposes of this section, a bathroom is a room which contains a bathtub, shower, or tub/ shower combination. 2. Lighting integral to bathroom exhaust fans shall comply with the *California Energy Code.*	A3.0
4.507.2 Heating and air-conditioning system design. Heating and air-conditioning systems shall be sized, designed and have their equipment selected using the following methods: 1.The heat loss and heat gain is established according to ANSI/ACCA 2 Manual J-2016 (Residential Load Calculation), ASHRAE handbooks or other equivalent design software or methods. 2.Duct systems are sized according to ANSI/ACCA 1 Manual D-2016 (Residential Duct Systems), ASHRAE handbooks or other equivalent design soft-ware or methods. 3.Select heating and cooling equipment according to ANSI/ACCA 3 Manual S-2014 (Residential Equipment Selection) or other equivalent design software or methods. Exception: Use of alternate design temperatures necessary to ensure the systems function are acceptable.	A3.0
4.106.4.3 New hotels and motels. All newly constructed hotels and motels shall provide EV spaces capable of supporting future installation of EVSE. The construction documents shall identify the location of the EV spaces.. **Notes:** 1. Construction documents are intended to demonstrate the project's capability and capacity for facilitating future EV charging. 2. There is no requirement for EV spaces to be constructed or available until EV chargers are installed for use.	NA

Division 4.5 ENVIRONMENTAL QUALITY

Description	Sheet
4.501.1 Scope. The provisions of this chapter shall outline means of reducing the quantity of air contaminants that are odorous, irritating and/or harmful to the comfort and wellbeing of a building's installers, occupants and neighbors.	A3.0
4.503.1 General. Any installed gas fireplace shall be a direct vent sealed-combustion type. Any installed woodstove or pellet stove shall comply with U.S. EPA New Source Performance Standards (NSPS) emission limits as applicable, and shall have a permanent label indicating they are certified to meet the emission limits. Woodstoves, pellet stoves and fireplaces shall also comply with applicable local ordinances.	A3.0
4.504.1 Covering of duct openings and protection of mechanical equipment during construction. At the time of rough installation, during storage on the construction site and until final startup of the heating, cooling and ventilating equipment, all duct and other related air distribution component openings shall be covered with tape, plastic, sheetmetal or other methods acceptable to the enforcing agency to reduce the amount of water, dust and debris, which may enter the system.	A3.0
4.504.2 Finish material pollutant control. Finish materials shall comply with this section.	A3.0

TABLE 4.504.1
ADHESIVE VOC LIMIT1,2
Less Water and Less Exempt Compounds in Grams per Liter

ARCHITECTURAL APPLICATIONS	CURRENT VOC LIMIT
Indoor carpet adhesives	50
Carpet pad adhesives	50
Outdoor carpet adhesives	150
Wood flooring adhesive	100
Rubber floor adhesives	60
Subfloor adhesives	50
Ceramic tile adhesives	65
VCT and asphalt tile adhesives	50
Drywall and panel adhesives	50
Cove base adhesives	50
Multipurpose construction adhesives	70
Structural glazing adhesives	100
Single-ply roof membrane adhesives	250
Other adhesives not specifically listed	50
SPECIALTY APPLICATIONS	
PVC welding	510
CPVC welding	490
ABS welding	325
Plastic cement welding	250
Adhesive primer for plastic	550
Contact adhesive	80
Special purpose contact adhesive	250
Structural wood member adhesive	140
Top and trim adhesive	250
SUBSTRATE SPECIFIC APPLICATIONS	
Metal to metal	30
Plastic foams	50
Porous material (except wood)	50
Wood	30
Fiberglass	80

1. If an adhesive is used to bond dissimilar substrates together, the adhesive with the highest VOC content shall be allowed.
2. For additional information regarding methods to measure the VOC content specified in this table, see South Coast Air Quality Management District Rule

TABLE 4.504.5
FORMALDEHYDE LIMITS1
Maximum Formaldehyde Emissions in Parts per Million

PRODUCT	CURRENT LIMIT
Hardwood plywood veneer core	0.05
Hardwood plywood composite core	0.05
Particleboard	0.09
Medium density fiberboard	0.11
Thin medium density fiberboard2	0.13

1. Values in this table are derived from those specified by the California Air Resources Board, Air Toxics Control Measure for Composite Wood as tested in accordance with ASTM E1333. For additional information, see California Code of Regulations, Title 17, Sections 93120 through 93120.12.
2. Thin medium density fiberboard has a maximum thickness of 5/16 inch (8 mm).

TABLE 4.504.3
VOC CONTENT LIMITS FOR ARCHITECTURAL COATINGS2,3

COATING CATEGORY	EFFECTIVE 1/1/2012
Flat coatings	50
Nonflat coatings	100
Nonflat-high gloss coatings	150
Aluminum roof coatings	400
Basement specialty coatings	400
Bituminous roof coatings	50
Bituminous roof primers	350
Bond breakers	350
Concrete curing compounds	350
Concrete/masonry sealers	100
Driveway sealers	50
Dry fog coatings	150
Faux finishing coatings	350
Fire resistive coatings	350
Floor coatings	100
Form-release compounds	250
Graphic arts coatings (sign paints)	500
High temperature coatings	420
Industrial maintenance coatings	250
Low solids coatings1	120
Magnesite cement coatings	450
Mastic texture coatings	100
Metallic pigmented coatings	500
Multicolor coatings	250
Pretreatment wash primers	420
Primers, sealers, and undercoaters	100
Reactive penetrating sealers	350
Recycled coatings	250
Roof coatings	50
Rust preventative coatings	250
Clear Shellacs	730
Opaque Shellacs	550
Specialty primers, sealers and undercoaters	100
Stains	250
Stone consolidants	450
Swimming pool coatings	340
Traffic marking coatings	100
Tub and tile refinish coatings	420
Waterproofing membranes	250
Wood coatings	275
Wood preservatives	350
Zinc-rich primers	340

1. Grams of VOC per liter of coating, including water and including exempt compounds.
2. The specified limits remain in effect unless revised limits are listed in subsequent columns in the table.
3. Values in this table are derived from those specified by the California Air Resources Board, Architectural Coatings Suggested Control Measure, February 1, 2008. More information is available from the Air Resources Board.

TABLE 4.504.2
SEALANT VOC LIMIT

SEALANTS	CURRENT VOC LIMIT
Architectural	250
Marine deck	760
Nonmembrane roof	300
Roadway	250
Single-ply roof membrane	450
Other	420
SEALANT PRIMERS	
Architectural	
Nonporous	250
Porous	775
Modified bituminous	500
Marine deck	760
Other	750

Division 4.3 – WATER EFFICIENCY & CONSERVATION

Description	Sheet
4.301.1 Scope. The provisions of this chapter shall establish the means of conserving water used indoors, outdoors and in wastewater conveyance.	A3.0
4.303.1 Water conserving plumbing fixtures and fittings. Plumbing fixtures (water closets and urinals) and fittings (faucets and showerheads) shall comply with Sections 4.303.1.1, 4.303.1.2, 4.303.1.3, and 4.303.1.4.**Note:** All noncompliant plumbing fixtures in any residential real property shall be replaced with water-conserving plumbing fixtures. Plumbing fixture replacement is required prior to issuance of a certificate of final completion, certificate of occupancy, or final permit approval by the local building department. See Civil Code Section 1101.1, et seq., for the definition of a noncompliant plumbing fixture, types of residential buildings affected and other important enactment dates.	A3.0
4.303.1.1 Water closets. The effective flush volume of all water closets shall not exceed 1.28 gallons per flush. Tank-type water closets shall be certified to the performance criteria of the U.S. EPA Water Sense Specification for Tank-type Toilets. Note: The effective flush volume of dual flush toilets is defined as the composite, average flush volume of two reduced flushes and one full flush.	A3.0
4.303.1.2 Urinals. The effective flush volume of wall mounted urinals shall not exceed 0.125 gallons per flush. The effective flush volume of all other urinals shall not exceed 0.5 gallons per flush.	NA
4.303.1.3.1 Single showerhead. Showerheads shall have a maximum flow rate of not more than 1.8 gallons per minute at 80 psi. Showerheads shall be certified to the performance criteria of the U.S. EPA Water Sense Specification for Showerheads.	A3.0
4.303.1.3.2 Multiple showerheads serving one shower. When a shower is served by more than one showerhead, the combined flow rate of all showerheads and/or other shower outlets controlled by a single valve shall not exceed 1.8 gallons per minute at 80 psi, or the shower shall be designed to allow only one shower outlet to be in operation at a time. **Note**: A hand-held shower shall be considered a showerhead.	A3.0
4.303.1.4.1 Residential lavatory faucets. The maximum flow rate of residential lavatory faucets shall not exceed 1.2 gallons per minute at 60 psi. The minimum flow rate of residential lavatory faucets shall not be less than 0.8 gallons per minute at 20 psi.	A3.0
4.303.1.4.2 Lavatory faucets in common and public use areas. The maximum flow rate of lavatory faucets installed in common and public use areas (outside of dwellings or sleeping units) in residential buildings shall not exceed 0.5 gallons per minute at 60 psi.	A3.0
4.303.1.4.3 Metering faucets. Metering faucets when installed in residential buildings shall not deliver more than 0.2 gallons per cycle.	NA
4.303.1.4.4 Kitchen faucets. The maximum flow rate of kitchen faucets shall not exceed 1.8 gallons per minute at 60 psi. Kitchen faucets may temporarily increase the flow above the maximum rate, but not to exceed 2.2 gallons per minute at 60 psi, and must default to a maximum flow rate of 1.8 gallons per minute at 60 psi. **Note:** Where complying faucets are unavailable, aerators or other means may be used to achieve reduction.	A3.0
4.303.2 Standards for plumbing fixtures and fittings. Plumbing fixtures and fittings shall be installed in accordance with the California Plumbing Code, and shall meet the applicable standards referenced in Table 1701.1 of the California Plumbing Code.	A3.0
4.304.1 Outdoor potable water use in landscape areas. Residential developments shall comply with a local water efficient landscape ordinance or the current California Department of Water Resources` Model Water Efficient Landscape Ordinance (MWELO), whichever is more stringent. **Notes:** 1.The Model Water Efficient Landscape Ordinance (MWELO) is located in the California Code of Regulations, Title 23, Chapter 2.7, Division 2.MWELO and supporting documents, including a water budget calculator, are available at: https://www.water.ca.gov/	A1.1
4.305.1 Recycled water supply systems. Newly constructed residential developments, where disinfected tertiary recycled water is available from a municipal source to a construction site, may be required to have recycled water supply systems installed, allowing the use of recycled water for residential landscape irrigation systems. See Chapter 15 of the *California Plumbing Code.*	NA

Division 4.4 – MATERIAL CONSERVATION & RESOURCE EFFICIENCY

Description	Sheet
4.401.1 Scope. The provisions of this chapter shall outline means of achieving material conservation and resource efficiency through protection of buildings from exterior moisture; construction waste diversion; employment of techniques to reduce pollution through recycling of materials; and building commissioning or testing, adjusting and balancing.	GB.1
4.406.1 Rodent proofing. Annular spaces around pipes, electric cables, conduits or other openings in sole/ bottom plates at exterior walls shall be protected against the passage of rodents by closing such openings with cement mortar, concrete masonry or a similar method acceptable to the enforcing agency.	A1.1
4.408.1 Construction waste management. Recycle and/or salvage for reuse a minimum of 65 percent of the nonhazardous construction and demolition waste in accordance with either Section 4.408.2, 4.408.3 or 4.408.4, or meet a more stringent local construction and demolition waste management ordinance. **Exceptions:** 1. Excavated soil and land-clearing debris. 2. Alternate waste reduction methods developed by working with local agencies if diversion or recycle facilities capable of compliance with this item do not exist or are not located reasonably close to the jobsite. 3. The enforcing agency may make exceptions to the requirements of this section when isolated jobsites are located in areas beyond the haul boundaries of the diversion facility	GB.1
4.408.2 Construction waste management plan. Submit a construction waste management plan in conformance with Items 1 through 5. The construction waste management plan shall be updated as necessary and shall be available during construction for examination by the enforcing agency. 1. Identify the construction and demolition waste materials to be diverted from disposal by recycling, reuse on the project or salvage for future use or sale. 2. Specify if construction and demolition waste materials will be sorted on-site (source-separated) or bulk mixed (single stream). 3. Identify diversion facilities where the construction and demolition waste material will be taken. 4. Identify construction methods employed to reduce the amount of construction and demolition waste generated. 5. Specify that the amount of construction and demolition waste materials diverted shall be calculated by weight or volume, but not by both.	GB.1
4.408.3 Waste management company. Utilize a waste management company, approved by the enforcing agency, which can provide verifiable documentation that the percentage of construction and demolition waste material diverted from the landfill complies with Section 4.408.1. **Note:** The owner or contractor may make the determination if the construction and demolition waste materials will be diverted by a waste management company.	GB.1
4.408.4 Waste stream reduction alternative [LR]. Projects that generate a total combined weight of construction and demolition waste disposed of in landfills, which do not exceed 3.4 pounds per square foot of the building area shall meet the minimum 65 percent construction waste reduction requirement in Section 4.408.1	GB.1
4.408.4.1 Waste stream reduction alternative. Projects that generate a total combined weight of construction and demolition waste disposed of in landfills, which do not exceed 2 pounds per square foot of the building area, shall meet the minimum 65-percent construction waste reduction requirement in Section 4.408.1.	GB.1
4.408.5 Documentation. Documentation shall be provided to the enforcing agency which demonstrates compliance with Section 4.408.2, Items 1 through 5, Section 4.408.3 or Section 4.408.4. **Notes:** 1.Sample forms found in "A Guide to the California Green Building Standards Code (Residential)" located at http://www.hcd.ca.gov/building-stan-dards/calgreen/cal-green-form.shtml may be used to assist in documenting compliance with this section. 2.Mixed construction and demolition debris (C&D) processors can be located at the California Department of Resources Recycling and Recovery (CalRecycle).	GB.1
4.410.1 Operation and maintenance manual. At the time of final inspection, a manual, compact disc, web-based reference or other media acceptable to the enforcing agency which includes all of the following shall be placed in the building: 1. Directions to the owner or occupant that the manual shall remain with the building throughout the life cycle of the structure. 2. Operation and maintenance instructions for the following: a. Equipment and appliances, including water-saving devices and systems, HVAC systems, photovoltaic systems, electric vehicle chargers, water-heating systems and other major appliances and equipment. b. Roof and yard drainage, including gutters and downspouts. c. Space conditioning systems, including condensers and air filters. d. Landscape irrigation systems. e. Water reuse systems. 3. Information from local utility, water and waste recovery providers on methods to further reduce resource consumption, including recycle programs and locations. 4. Public transportation and/or carpool options available in the area. 5. Educational material on the positive impacts of an interior relative humidity between 30–60 percent and what methods an occupant may use to maintain the relative humidity level in that range. 6. Information about water-conserving landscape and irrigation design and controllers which conserve water. 7. Instructions for maintaining gutters and downspouts and the importance of diverting water at least 5 feet away from the foundation. 8. Information on required routine maintenance measures, including, but not limited to, caulking, painting, grading around the building, etc. 9. Information about state solar energy and incentive programs available. 10. A copy of all special inspection verifications required by the enforcing agency or this code.11. Information from the Department of Forestry and Fire Protection on maintenance of defensible space around residential structures. 12. Information and/or drawings identifying the location of grab bar reinforcements.	At Final
4.410.2 Recycling by occupants. Where 5 or more multifam-ily dwelling units are constructed on a building site, provide readily accessible area(s) that serves all buildings on the site and are identified for the depositing, storage and collection of nonhazardous materials for recycling, including (at a minimum) paper, corrugated cardboard, glass, plastics, organic waste, and metals, or meet a lawfully enacted local recycling ordinance, if more restrictive.Exception: Rural jurisdictions that meet and apply for the exemption in Public Resources Code Section 42649.82 (a)(2)(A) et seq. are not required to comply with the organic waste portion of this section.	NA

Division 4.1 — Site & EV Charging

Description	Sheet
4.101.1 Scope. The provisions of this division outline planning, design and development methods that include environmentally responsible site selection, building design, building siting and development to protect, restore and enhance the environmental quality of the site and respect the integrity of adjacent properties.	A1.1
4.106.1 General. Preservation and use of available natural resources shall be accomplished through evaluation and careful planning to minimize negative effects on the site and adjacent areas. Preservation of slopes, management of storm water drainage and erosion controls shall comply with this section.	A1.1
4.106.2 Storm water drainage and retention during construction. Projects which disturb less than one acre of soil and are not part of a larger common plan of development which in total disturbs one acre or more, shall manage storm water drainage during construction. In order to manage storm water drainage during construction, one or more of the following measures shall be implemented to prevent flooding of adjacent property, prevent erosion and retain soil runoff on the site. 1.Retention basins of sufficient size shall be utilized to retain storm water on the site. 2.Where storm water is conveyed to a public drainage system, collection point, gutter or similar disposal method, water shall be filtered by use of a barrier system, wattle or other method approved by the enforcing agency. 3.Compliance with a lawfully enacted storm water management ordinance. Note: Refer to the State Water Resources Control Board for projects which disturb one acre or more of soil, or are part of a larger common plan of development which in total disturbs one acre or more of soil.(Website: https://www.waterboards.ca.gov/water_issues/programs/stormwater/ construction.html)	A1.1
4.106.3 Grading and paving. Construction plans shall indicate how the site grading or drainage system will manage all surface water flows to keep water from entering buildings. Examples of methods to manage surface water include, but are not limited to, the following: 1. Swales 2. Water collection and disposal systems 3. French drains 4. Water retention gardens 5. Other water measures which keep surface water away from buildings and aid in groundwater recharge. **Exception:** Additions and alterations not altering the drainage path.	A1.1
4.106.4 Electric vehicle (EV) charging for new construction. New construction shall comply with Section 4.106.4.1, 4.106.4.2, or 4.106.4.3, to facilitate future installation and use of EV chargers. Electric vehicle supply equipment (EVSE) shall be installed in accordance with the California Electrical Code, Article 625. **Exceptions:** 1.On a case-by-case basis, where the local enforcing agency has determined EV charging and infrastructure are not feasible based upon one or more of the following conditions:1.1. Where there is no commercial power supply.1.2. Where there is evidence substantiating that meeting the requirements will alter the local utility infrastructure design requirements on the utility side of the meter so as to increase the utility side cost to the homeowner or the developer by more than $400.00 per dwelling unit. 2.Accessory Dwelling Units (ADU) and Junior Accessory Dwelling Units (JADU) without additional parking facilities.	A3.0
4.106.4.1 New one- and two-family dwellings and townhouses with attached private garages. For each dwelling unit, install a listed raceway to accommodate a dedicated 208/240-volt branch circuit. The raceway shall not be less than trade size 1 (nominal 1-inch inside diameter). The raceway shall originate at the main service or subpanel and shall terminate into a listed cabinet, box or other enclosure in close proximity to the proposed location of an EV charger. Raceways are required to be continuous at enclosed, inaccessible or concealed areas and spaces. The service panel and/or subpanel shall provide capacity to install a 40-ampere minimum dedicated branch circuit and space(s) reserved to permit installation of a branch circuit overcurrent protective device.	A3.0
4.106.4.1.1 Identification. The service panel or subpanel circuit directory shall identify the overcurrent protective device space(s) reserved for future EV charging as "EV CAPABLE". The raceway termination location shall be permanently and visibly marked as "EV CAPABLE".	A3.0
4.106.4.2 New multifamily dwellings. If residential parking is available, ten (10) percent of the total number of parking spaces on a building site, provided for all types of parking facilities, shall be electric vehicle charging spaces (EV spaces) capable of supporting future EVSE. Calculations for the required number of EV spaces shall be rounded up to the nearest whole number. **Notes:** 1.Construction documents are intended to demonstrate the project's capability and capacity for facilitating future EV charging. 2.There is no requirement for EV spaces to be con-structed or available until EV chargers are installed for use.	NA
4.106.4.2.1 Electric vehicle charging space (EV space) locations. Construction documents shall indicate the location of proposed EV spaces. Where common use parking is provided at least one EV space shall be located in the common use parking area and shall be available for use by all residents.	A3.0
4.106.4.2.1.1 Electric vehicle charging stations (EVCS). When EV chargers are installed, EV spaces required by Section 4.106.4.2.2, Item 3, shall comply with at least one of the following options: 1. The EV space shall be located adjacent to an accessible parking space meeting the requirements of the CBC, Chapter 11A, to allow use of the EV charger from the accessible parking space. 2. The EV space shall be located on an accessible route, as defined in the CBC, Chapter 2, to the building. Exception: Electric vehicle charging stations designed and constructed in compliance with the CBC, Chapter 11B, are not required to comply with Section 4.106.4.2.1.1 and Section 4.106.4.2.2, Item 3. Note: Electric vehicle charging stations serving public housing are required to comply with the CBC, Chapter 11 B.	A3.0
4.106.4.2.2 Electric vehicle charging space (EV space) dimensions. The EV spaces shall be designed to comply with the following: 1. The min length of each EV space shall be 18 feet (5486 mm). 2. The minimum width of each EV space shall be 9 feet (2743 mm). 3. One in every 25 EV spaces, but not less than one, shall also have an 8-foot (2438 mm) wide minimum aisle. A 5-foot (1524 mm) wide minimum aisle shall be permitted provided the minimum width of the EV space is 12 feet (3658 mm). a. Surface slope for this EV space and the aisle shall not exceed 1 unit vertical in 48 units horizontal (2.083 percent slope) in any direction.	A3.0
4.106.4.2.3 Single EV space required. Install a listed raceway capable of accommodating a 208/240-volt dedicated branch circuit. The raceway shall not be less than trade size 1 (nominal 1-inch inside diameter). The raceway shall originate at the main service or subpanel and shall terminate into a listed cabinet, box or enclosure in close proximity to the proposed location of the EV space. Construction documents shall identify the raceway termination point. The service panel and/or subpanel shall provide capacity to install a 40-ampere minimum dedicated branch circuit and space(s) reserved to permit installation of a branch circuit over current protective device.	A3.0
4.106.4.2.4 Multiple EV spaces required. Construction documents shall indicate the raceway termination point and proposed location of future EV spaces and EV chargers. Construction documents shall also provide information on amperage of future EVSE, raceway method(s), wiring schematics and electrical load calculations to verify that the electrical panel service capacity and electrical system, including any on-site distribution transformer(s), have sufficient capacity to simultaneously charge all EVs at all required EV spaces at the full rated amperage of the EVSE. Plan design shall be based upon a 40-ampere minimum branch circuit. Required raceways and related components that are planned to be installed underground, enclosed, inaccessible or in concealed areas and spaces shall be installed at the time of original construction.	A3.0
4.106.4.2.5 Identification. The service panel or sub-panel circuit directory shall identify the overcurrent protective device space(s) reserved for future EV charging purposes as "EV CAPABLE" in accordance with the *California Electrical Code.*	A3.0

INSTALLER AND SPECIAL INSPECTOR QUALIFICATIONS

702.1 Installer training. HVAC system installers shall be trained and certified in the proper installation of HVAC systems including ducts and equipment by a nationally or regionally recognized training or certification program. Uncertified persons may perform HVAC installations when under the direct supervision and responsibility of a person trained and certified to install HVAC systems or contractor licensed to install HVAC systems. Examples of acceptable HVAC training and certification programs include but are not limited to the following: 1. State certified apprenticeship programs. 2. Public utility training programs. 3. Training programs sponsored by trade, labor or statewide energy consulting or verification organizations. 4. Programs sponsored by manufacturing organizations. 5. Other programs acceptable to the enforcing agency.

702.2 Special inspection. [HCD] When required by the enforcing agency, the owner or the responsible entity acting as the owner's agent shall employ one or more special inspectors to provide inspection or other duties necessary to substantiate compliance with this code. Special inspectors shall demonstrate competence to the satisfaction of the enforcing agency for the particular type of inspection or task to be performed. In addition to other certifications or qualifications acceptable to the enforcing agency, the following certifications or education may be considered by the enforcing agency when evaluating the qualifications of a special inspector: 1. Certification by a national or regional green building program or standard publisher. 2. Certification by a statewide energy consulting or verification organization, such as HERS raters, building performance contractors, and home energy auditors. 3. Successful completion of a third party apprentice training program in the appropriate trade. 4. Other programs acceptable to the enforcing agency. Notes: 1. Special inspectors shall be independent entities with no financial interest in the materials or the project they are inspecting for compliance with this code. 2. HERS raters are special inspectors certified by the California Energy Commission (CEC) to rate homes in California according to the Home Energy Rating System (HERS).

[BSC-CG] When required by the enforcing agency, the owner or the responsible entity acting as the owner's agent shall employ one or more special inspectors to provide inspection or other duties necessary to substantiate compliance with this code. Special inspectors shall demonstrate competence to the satisfaction of the enforcing agency for the particular type of inspection or task to be performed. In addition, the special inspector shall have a certification from a recognized state, national or international association, as determined by the local agency. The area of certification shall be closely related to the primary job function, as determined by the local agency. Note: Special inspectors shall be independent entities with no financial interest in the materials or the project they are inspecting for compliance with this code.

703.1 Documentation. Documentation used to show compliance with this code shall include but is not limited to, construction documents, plans, specifications, builder or installer certification, inspection reports, or other methods acceptable to the enforcing agency which demonstrate substantial conformance. When specific documentation or special inspection is necessary to verify compliance, that method of compliance will be specified in the appropriate section or identified in the application checklist.

Construction Waste Management Plan (CWMP)

Construction Waste Management Plan can be deferred submittal until such a time as a contractor is chosen

Project: Clausen Rd Addition
38 Clausen Rd
Watsonville, CA 95076

Building Permit #: ______________

Square Footage: 12310 Addition sf

Owner: ______________ **Phone**:______________
Project Manager / Contractor : ______________
Phone:__________ **Cell:** __________ **email:** __________
Waste Hauling Company: ______________ **Phone**:__________
Disposal Service Company: ______________ **Phone**:__________
Sub Contractor : ______________
Phone:__________ **Cell:** __________ **email:** __________
Sub Contractor : ______________
Phone:__________ **Cell:** __________ **email:** __________
Sub Contractor : ______________
Phone:__________ **Cell:** __________ **email:** __________

Responsible Designer's Declaration Statement I hereby certify that this project has been designed to meet the requirements of the 2022 California Green Building Standards Code.	**Contractor Declaration Statement** I hereby certify, as the builder or installer under the permit listed herein, that this project will be constructed to meet the requirements of the California Green Building Standards Code.
Name: Eric Ruiz & Luis Lopez	Name:
Signature:	Signature:
Date:	Date:
Company: E&L Building Design Studio	License:
Address: 150 Cayuga St Suit 1	Address:
City: State: Zip: Salinas CA 93901	City: State: Zip:

The purpose of this plan is to identify and outline the methods to be used as the minimum requirements for a construction waste management plan when the local jurisdiction does not have a construction and demolition waste management ordinance per Section 4.408.2.

1. The method of waste tracking to be used on this project will be: (Check one box)

   ☐ Volume ☐ Weight ☐ 4 Lbs. per Sq. Ft. ☐ Recycling Facility

2. Construction waste generated on this project for transport to a recycling facility will be: (Check appropriate box)

   ☐ Sorted on-site (Source-separated) ☐ Bulk mixed (Single stream)

3. The facility (or facilities) where the construction waste material will be taken is:

   Name of Facility:______________
   Address:______________
   Telephone:______________
   (Attach separate sheet for additional facilities)

4. The following construction methods will be used to reduce the amount of waste generated: (Check all that apply)

   ☒ Efficient design (dimensions of building components are designed to available material sizes or standard sizes).
   ☒ Careful and accurate material ordering.
   ☒ Careful material handling and storage.
   ☐ Panelized or prefabricated construction.
   ☐ Other ______________
   ☐ Other ______________

5. Waste reduction and recycling strategies shall be discussed at periodic project meetings. Each new Contractor that comes onto the site shall be provided with a copy of the CWMP, which shall also be posted in the project office. The Project Manager shall also instruct all Subcontractors as to the location and proper use of debris boxes for disposal of construction waste materials.

6. Every effort shall be made to use recycling and/or reuse (diversion) measures to reduce the amount of construction waste and other materials sent to landfills. Whenever possible, site sorted debris boxes shall be used to segregate construction waste materials to maximize the diversion rate.
7. The Contractor shall provide debris boxes for materials sorted on-site (source-separated) and/or bulk mixed (single stream) waste for all construction related waste generated on this project. Mixed construction waste shall be taken to a recycling facility that has a diversion rate of at least 65 percent. In the event that a Subcontractor provides their own debris box, they shall be responsible for providing the Contractor with a monthly report of the total Recycled and Reused (Diverted) and the total Non-Recycled (Disposed) materials to be included in the project's overall waste management/waste reduction program.
8. Any Supplier hauling away packaging or waste materials shall notify the Contractor of the amount of these materials and how they will be disposed of (reused, recycled, salvaged, or taken to landfill).
9. Identified below are the construction waste materials that will be reused and/or recycled during the course of this project and how they will be diverted:

Material	Diversion Method: (Recycle/Reuse)
CONCRETE / ASPHALT	
LUMBER	
CARPET / PAD	
INSULATION	
METAL	
SHEETROCK	
CARDBOARD	
TRASH	

(See Construction Waste Management Worksheets for examples of common materials.)

10. The Waste Hauler shall track the total amount of construction waste leaving the project by weight or by volume and supply the Contractor with copies of tickets or detailed receipts from all loads of construction waste removed from the jobsite.
11 . The Contractor shall monitor the process of waste management, recycling, and reuse of construction waste materials to ensure compliance with the CWMP during the course of the project.
12. The Contractor shall ensure that all supporting documentation which demonstrates compliance with the waste management plan is provided to the local enforcement agency upon completion of the project.

www.apges.com

A Plus Green Energy Services
831.728.7717
408.310.0081

Federally Approved Contractor

Licensed California Contractor
A & B 665195

ICC Building Inspector B1 & B2
8023419

ICC CalGreen Inspector

CalCerts | CHEERS HERS Rater

CABEC Certified Energy Analyst

Build it Green
Certified Green Building Professional
Rater / Advisor

A Plus Green Energy Services
757 Freedom Blvd ▪ Watsonville, CA 95076 ▪ 408-310-0081 ▪ www.apges.com

CERTIFIED HERS RATER / ENERGY ANALYSTS
In tomorrow's California, the sustainability of our environment and the preservation of our beautiful resources will be aided by responsible and professional analysis of our energy needs and uses.

JAMES BLOMQUIST
CEA R19-15-30136

CERTIFIED GreenPoint RATER

Title 24 Part 11
2022 CalGreen Code

CalGreen Mandatory

Clausen Rd Addition
38 Clausen Rd
Watsonville, CA 95076

Project id 8550

GB.1

1/9/2024